BUREAU, _____ BUREAU ENGINEER _____ DRAFTSMAN, EWF DATE 2-21-79 SCALE NONE

NOTE: PIPE OFF CENTER. EXACT LOCATION TO BE DETERMINED IN FIELD

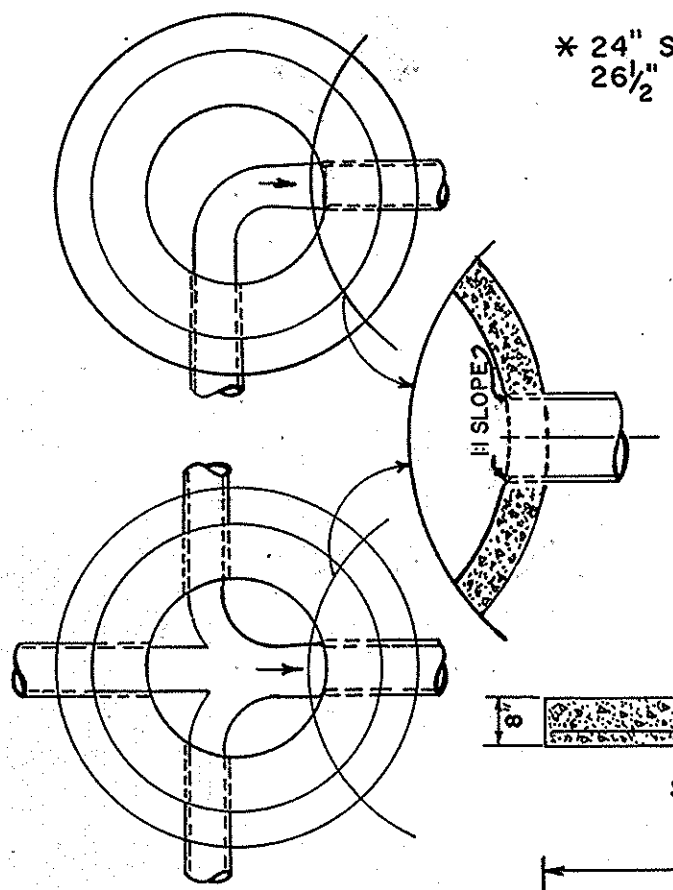

TYPICAL PLANS

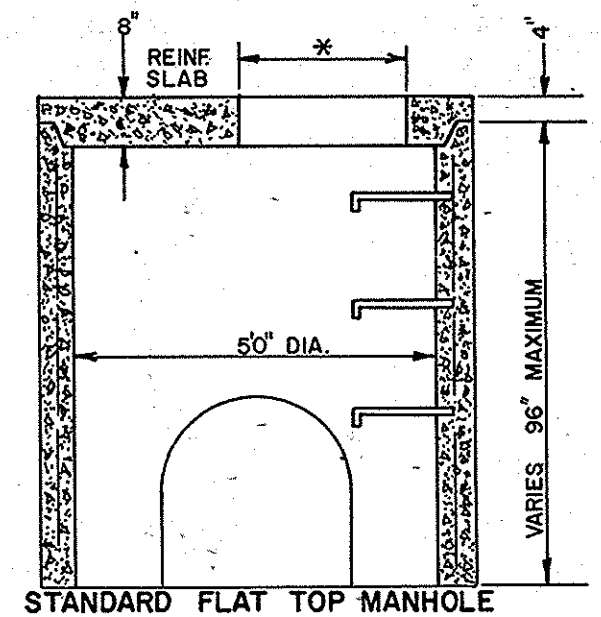

STANDARD FLAT TOP MANHOLE

NOTE:
JOINT SEALANT CONCRETE MORTAR SHALL BE USED TO SEAL JOINTS AFTER THE INSTALLATION OF AN APPROVED GASKET BETWEEN ALL PRECAST MANHOLE SECTIONS.

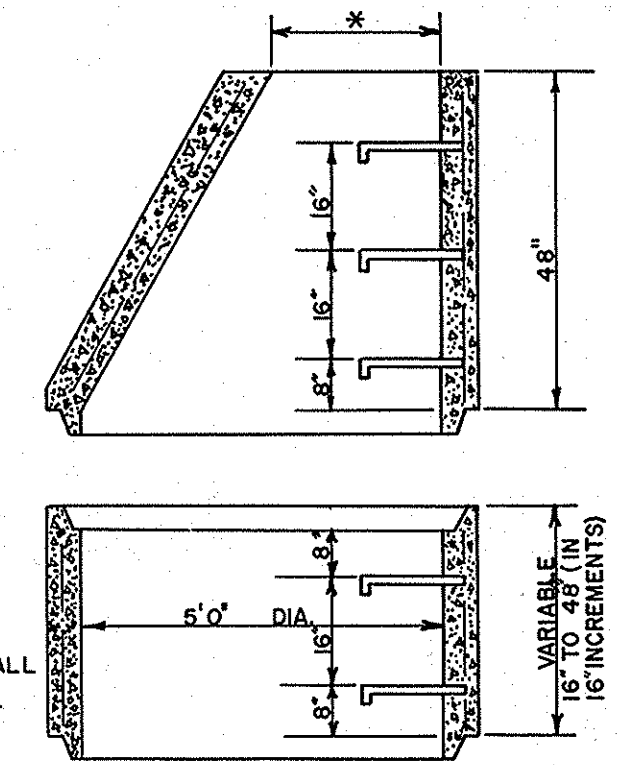

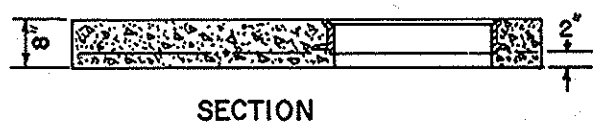

SECTION

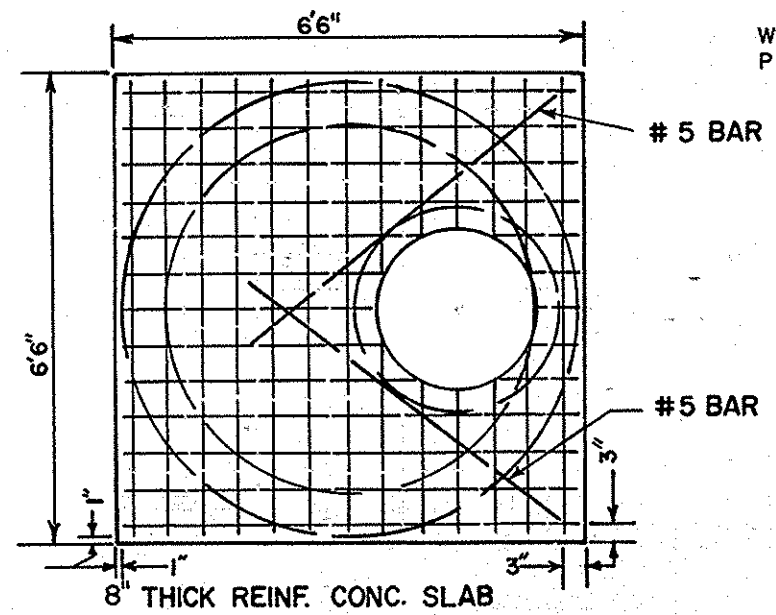

8" THICK REINF. CONC. SLAB

A CONCRETE SLAB 8" THICK, (WITH MANHOLE FRAME LOCATED ECCENTRICALLY IN SLAB) REINFORCED WITH #4 DEFORMED STEEL BARS 2" FROM BOTTOM OF SLAB AND SPACED 6" C-C BOTH LONGITUDINALLY AND TRANSVERSELY. SLAB TO BE BUILT TO BASE OR PAVEMENT GRADE

WALL THICKNESS EQUALS PIPE DIA. (IN FT.) + 1"

CUT-OUT SIZES

15" PIPE — 22" CUT-OUT
18" PIPE — 27" CUT-OUT
24" PIPE — 36" CUT-OUT
30" PIPE — 44" CUT-OUT
36" PIPE — 50" CUT-OUT

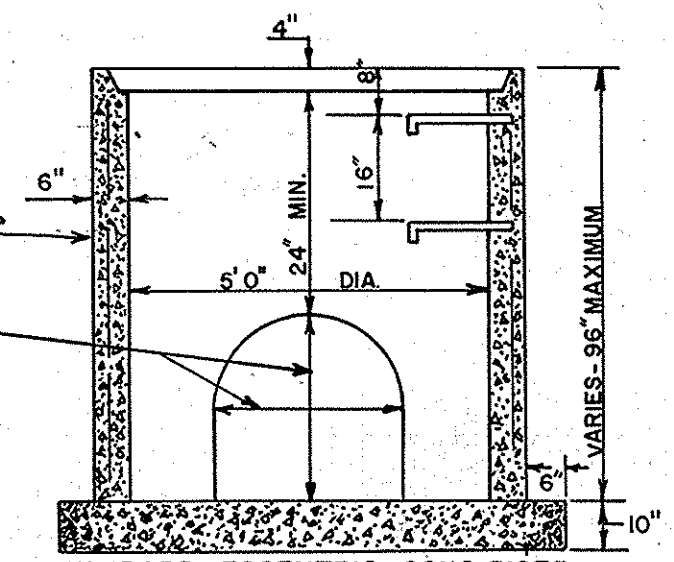

STANDARD ECCENTRIC CONC. RISER SECTION, BASE SECTION AND BASE

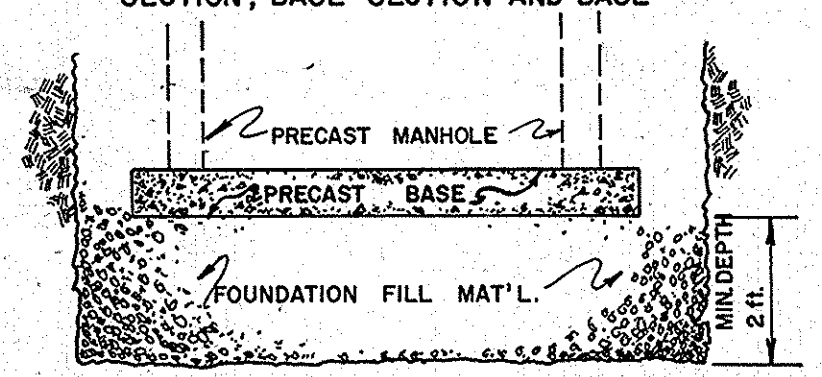

REVISIONS

NO.	DATE	BY	REMARKS
1	5-30-85	L.R.H.	REMOVED DIV. OF PUBLIC WORKS (T. BLK.)
2	7-24-87	D.H.G.	ADD: #5 BAR ; #4
3	2-3-88	D.H.G.	REMOVED DEPARTMENT (T. BLK.)
4	2-14-11	L.R.H.	REVISED M.H. OPENING

CONVERSIONS

ENGLISH	METRIC

GENERAL NOTES

THIS MANHOLE WILL CONFORM TO THE STANDARD DRAWING UNLESS OTHERWISE SHOWN OR DIRECTED BY THE ENGINEER TO MEET SPECIAL CONDITIONS. THERE WILL NO VARIATION FROM THE CONTRACT PRICE DUE TO SUCH CHANGES. IN ALL CASES IT MUST BE BUILT LARGE ENOUGH TO ACCOMMODATE INLET AND OUTLET PIPES.

THE PRECAST CONCRETE MANHOLE SHALL MEET THE REQUIREMENT AND SPECIFICATION SET OUT IN A S T M-C478, LAST REVISION

ALL CONCRETE FOR MASONRY TO BE CLASS "A"

CITY OF MEMPHIS
DIVISION OF ENGINEERING

DESIGN STANDARD FOR PRECAST MANHOLE

Ray Marsh — 10-29-79
PRINCIPAL CIVIL ENGINEER

J. R. James Jr. — 10-29-79
DEPUTY DIRECTOR/CIVIL ENGINEER — DATE

DWG. NO. 13