BUREAU ENGINEER DRAFTSMAN db DATE 11-79 SCALE 1½" = 1'-0"

REVISIONS			
NO.	DATE	BY	REMARKS
1	5-30-85	L.R.H.	REMOVED DIV. OF PUBLIC WORKS (T. BLK.)
2	2-4-88	D.H.G.	REMOVED DEPARTMENT (T. BLK.)
3	7-14-88	D.H.G.	OPTIONAL RIM SECTION
4	2-3-11	L.R.H.	REVISED WEIGHTS

CONVERSIONS	
ENGLISH	METRIC

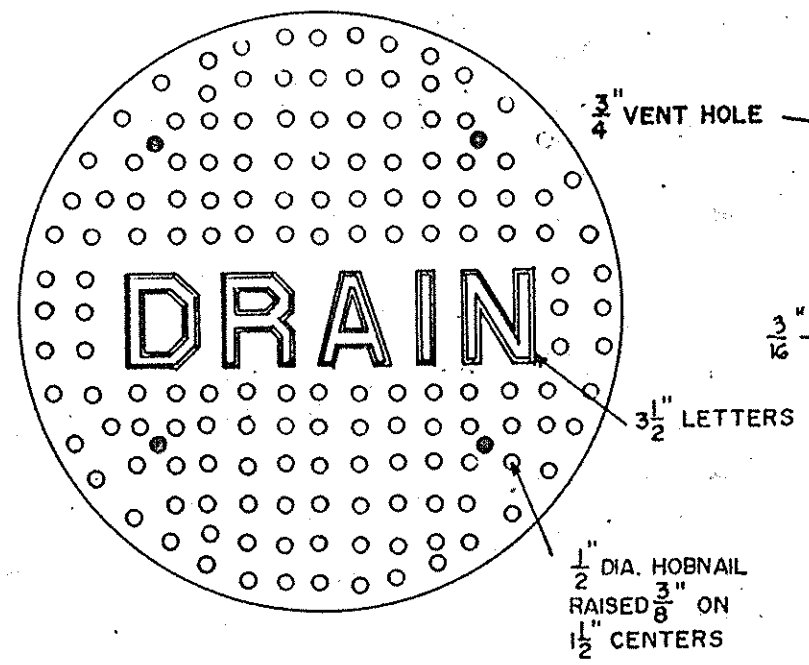

TOP PLAN

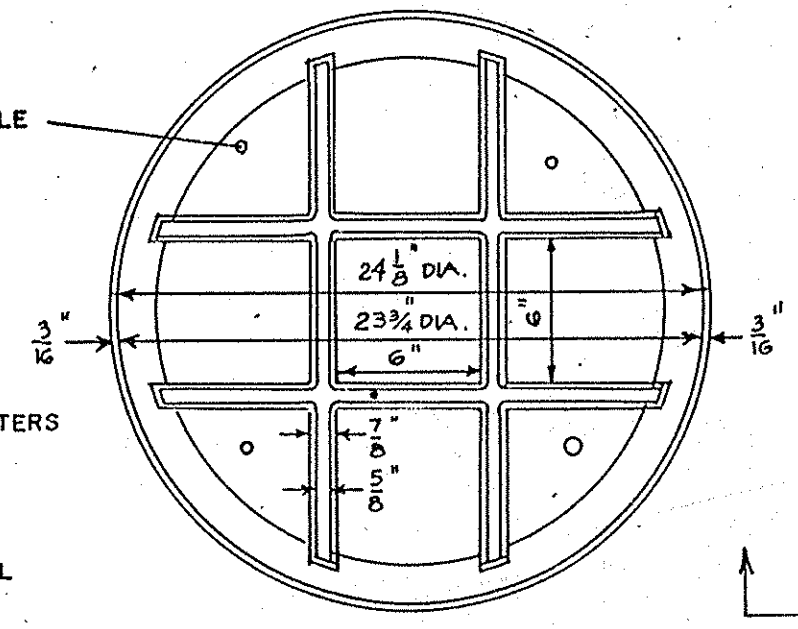

BOTTOM PLAN

MANHOLE COVER NO. 7A-ALT.

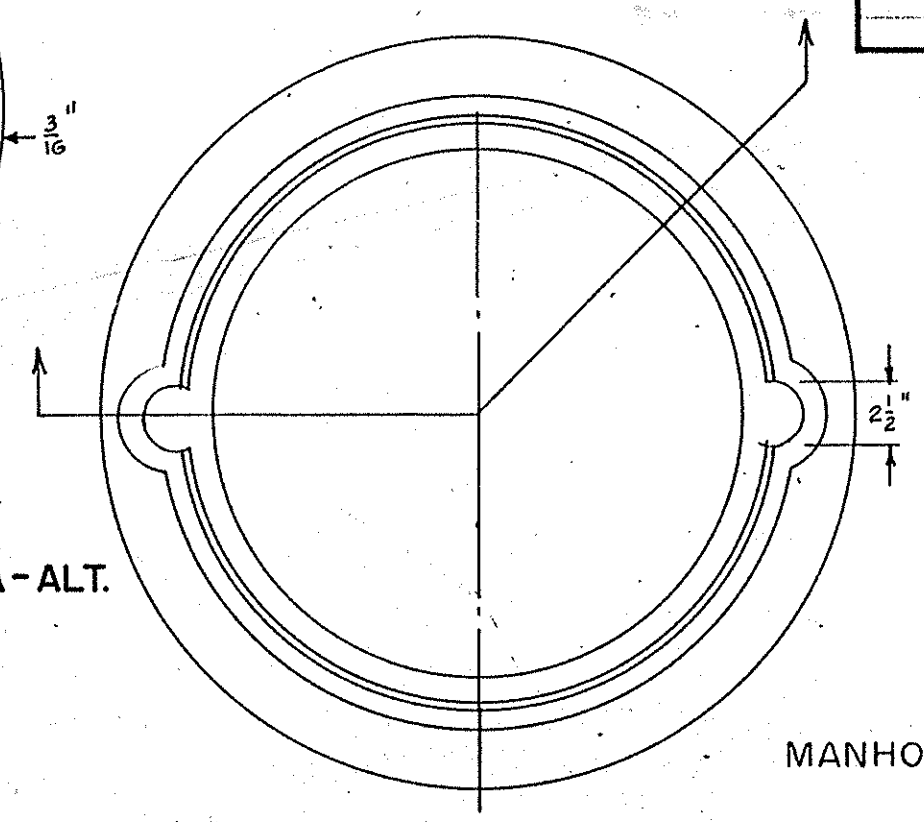

TOP PLAN

MANHOLE RIM NO. 7A-ALT.

NOTE:
WEIGHT – COVER 150 lbs. MINIMUM
FRAME 200 lbs. MINIMUM

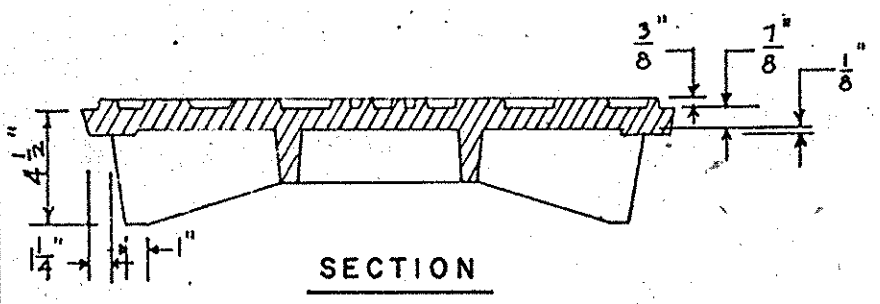

SECTION

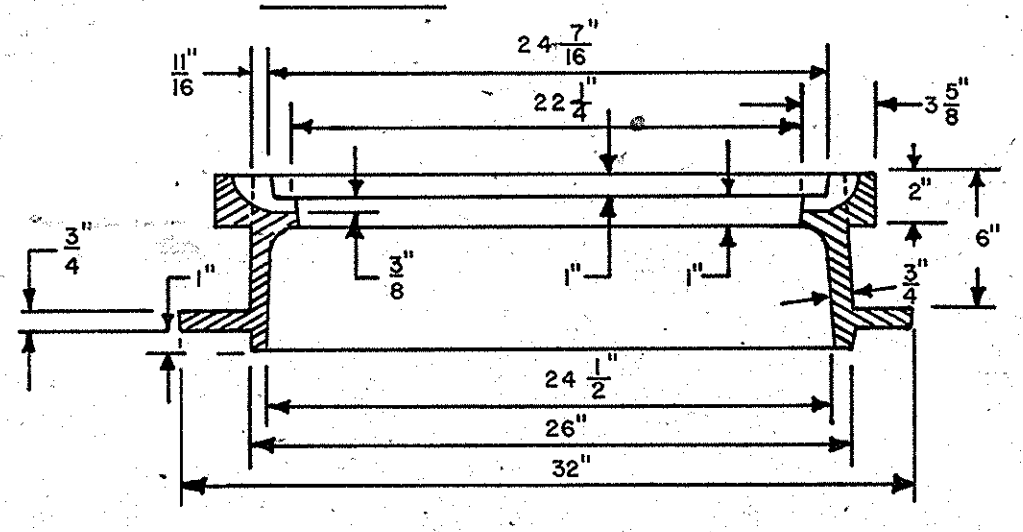

OPTIONAL RIM SECTION

NOT TO SCALE

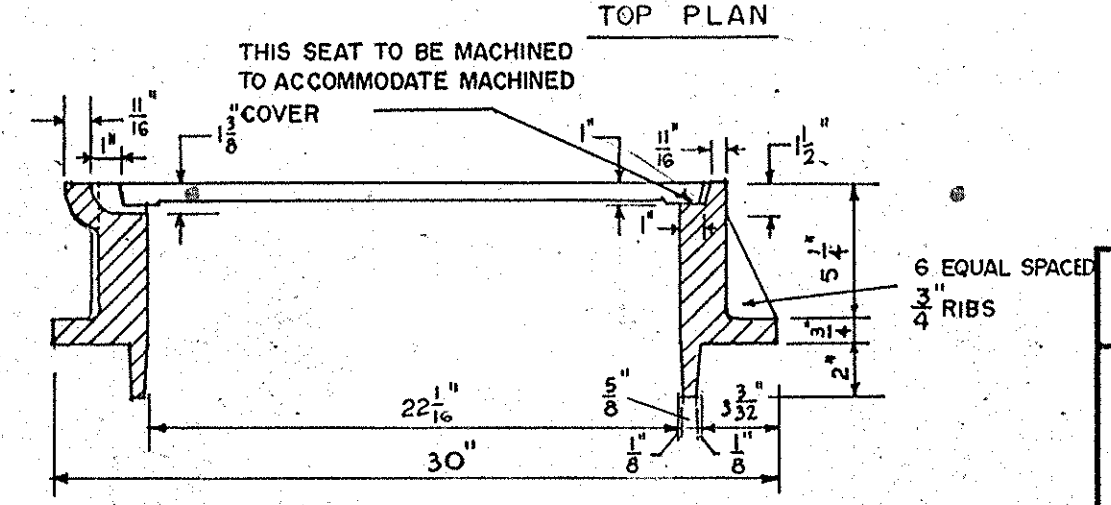

SECTION

CITY OF MEMPHIS
DIVISION OF ENGINEERING

DESIGN STANDARD

FOR

NO. 7A-ALT.

MANHOLE RIM AND COVER

Ray Mason — 12-19-79
PRINCIPAL CIVIL ENGINEER

J. G. Jones Jr. — 1-3-80
DEPUTY DIRECTOR / CIVIL ENGINEER — DATE

DWG. NO. 15