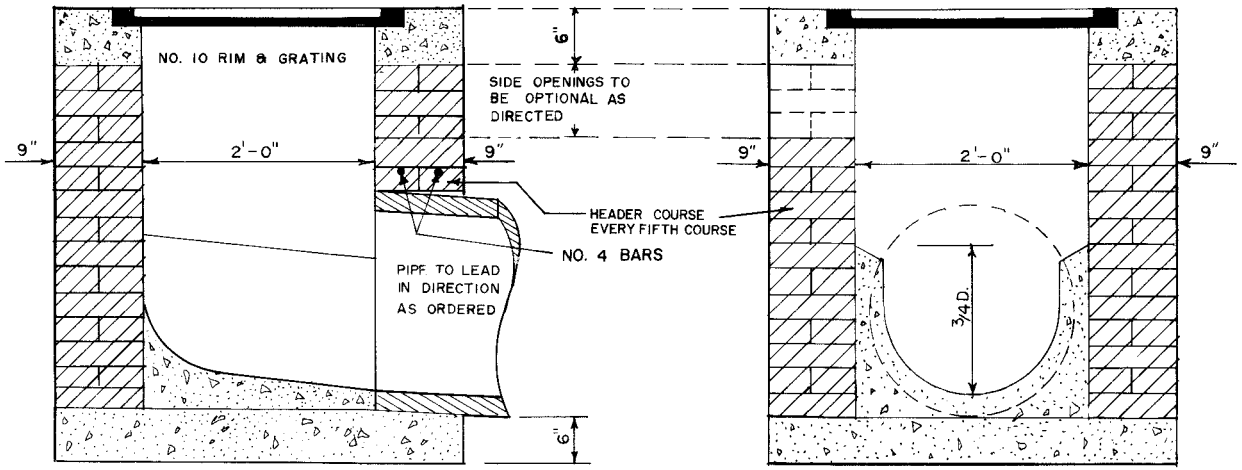

LONGITUDINAL SECTION

CROSS SECTION

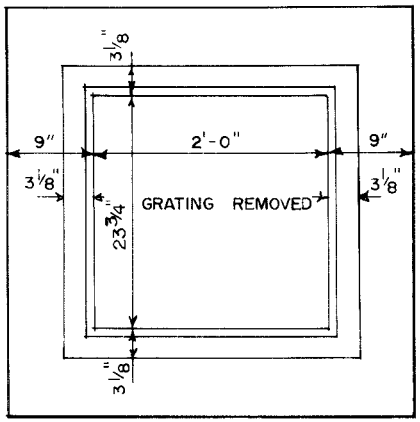

PLAN

REVISIONS			
NO.	DATE	BY	REMARKS
1	5-30-85	L.R.H.	REMOVED DIV. OF PUBLIC WORKS (T. BLK.)
2	7-21-87	D.H.G.	ADD: NO. 4 BARS ; CLASS 'A'
3	2-8-88	D.H.G.	REMOVED DEPARTMENT (T. BLK.)

CONVERSIONS	
ENGLISH	METRIC

NOTE: Conc. to be CLASS 'A'

CITY OF MEMPHIS
DIVISION OF ENGINEERING

DESIGN STANDARD
FOR
INLET # 10

PRINCIPAL CIVIL ENGINEER — DATE 7-5-79

DEPUTY DIRECTOR/CIVIL ENGINEER — DATE

DWG. NO. 16

BUREAU ENGINEER — DRAFTSMAN — DATE — SCALE

JC5756