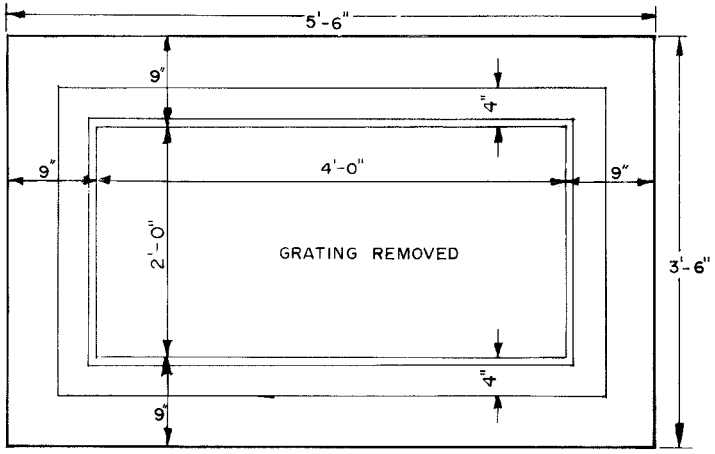

PLAN

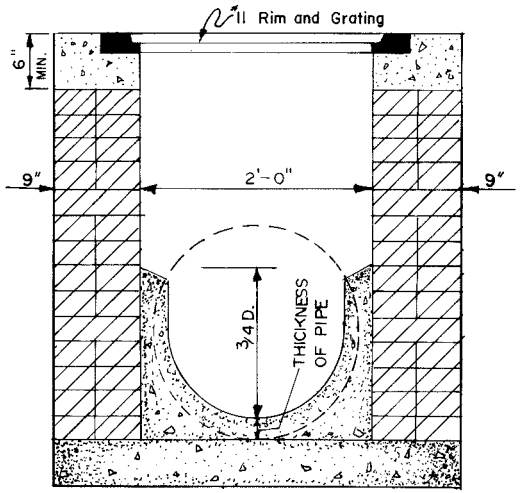

CROSS SECTION

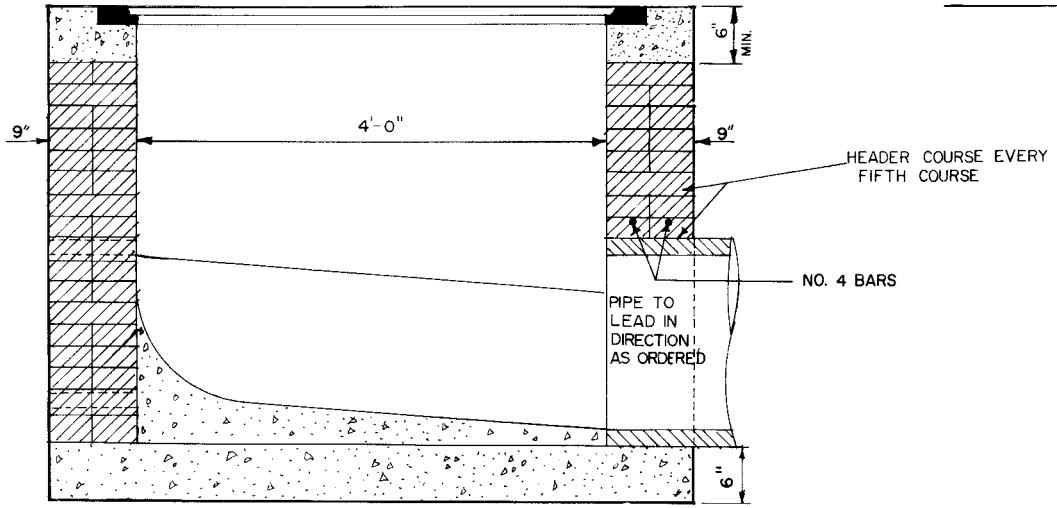

LONGITUDINAL SECTION

REVISIONS			
NO.	DATE	BY	REMARKS
—	3-12-85	J.L.H.	OUTSIDE DIMENSIONS OF INLET CORRECTED.
1	4-18-85	J.M.B.	REMOVED DIV. OF PUBLIC WORKS (T. BLK.)
2	7-17-87	D.H.G.	ADD: NO. 4 BARS; CLASS 'A'
3	2-8-88	D.H.G.	REMOVED DEPARTMENT (T. BLK.)

CONVERSIONS	
ENGLISH	METRIC

NOTE:

CONC. TO BE CLASS 'A'

CITY OF MEMPHIS
DIVISION OF ENGINEERING

DESIGN STANDARD
FOR
INLET # II

PRINCIPAL CIVIL ENGINEER — DATE 7-10-79

DEPUTY DIRECTOR/ CIVIL ENGINEER — DATE

DWG. NO. 18

BUREAU ____ BUREAU ENGINEER ____ DRAFTSMAN ____ DATE ____ SCALE ____

JC-57-6