BUREAU CIVIL DESIGN — BUREAU ENGINEER — DRAFTSMAN db — DATE 11-14-79 — SCALE N.T.S.

NOTE: USE CLASS 'A' CONC.

REVISIONS			
NO.	DATE	BY	REMARKS
1	5-30-85	L.R.H.	REMOVED DIV. OF PUBLIC WORKS (T. BLK.)
2	7-21-87	D.H.G.	ADD: CLASS 'A' CONC.
3	2-29-88	D.H.G.	REMOVED DEPARTMENT (T.BLK.)
4	2-26-02	L.R.H.	ADDED 72" PIPE & NOTE

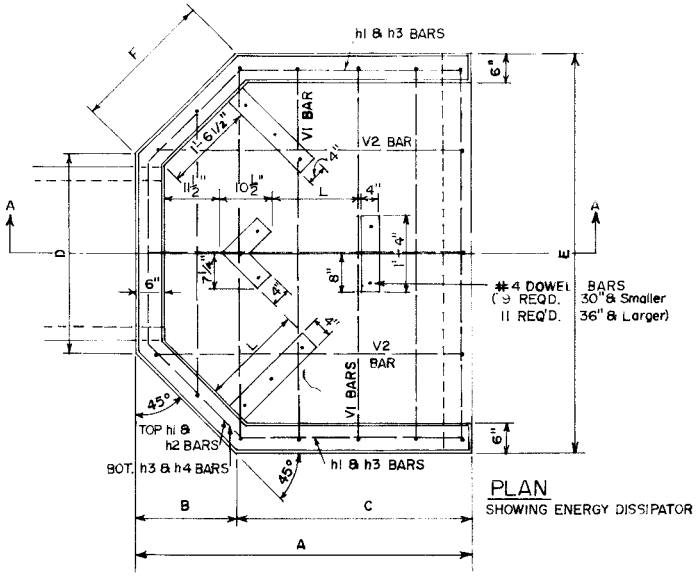

PLAN
SHOWING ENERGY DISSIPATOR

TABLE OF DIMENSIONS AND DIAMETERS											
DIA	15"	18"	21"	24"	30"	36"	42"	48"	54"	60"	72"
A	5'-3 3/8"	5'-6 3/4"	5'-6 3/4"	5'-7 1/2"	5'-9"	7'-4 1/2"	9'-0"	9'-11/2"	10'-9"	12'-6"	15'-6"
B	1'-8 1/2"	1'-8 1/2"	1'-8 1/2"	1'-8 1/2"	1'-9"	1'-9"	1'-9"	1'-9"	1'-9"	1'-9"	1'-9"
C	3'-0 7/8"	3'-4 1/4"	3'-10 1/4"	3'-11"	4'-0"	5'-7 1/2"	7'-3"	7'-4 1/2"	9'-0"	10'-9"	13'-9"
D	2'-0 1/4"	2'-3 1/2"	2'-6 1/2"	2'-10"	3'-5"	4'-0"	4'-7"	5'-2"	5'-9"	6'-5"	7'-9"
E	5'-5 1/4"	5'-8 1/2"	5'-11 1/2"	6'-3"	6'-11 1/4"	7'-6"	8'-1"	8'-8"	9'-3"	9'-11"	11'-3"
F	2'-4 1/4"	2'-4 1/4"	2'-4 1/4"	2'-4 1/4"	2'-5 11/16"	2'-5 11/16"	2'-5 11/16"	2'-5 11/16"	2'-5 11/16"	2'-5 11/16"	2'-5 3/4"
G	4'-9 3/8"	5'-0 3/4"	5'-0 3/4"	5'-11 1/2"	5'-3"	6'-10 1/2"	8'-6"	8'-7 1/2"	10'-3"	12'-0"	15'-0"
H	2'-5 1/8"	2'-8 1/4"	2'-11 1/2"	3'-2 1/2"	3'-9"	4'-3 1/2"	4'-10"	5'-4 1/2"	5'-11"	6'-6"	7'-6"
I	2'-0"	2'-0"	2'-0"	2'-0"	2'-0"	3'-0"	3'-0"	3'-0"	3'-0"	3'-0"	3'-0"
J	0'-10"	1'-0"	1'-3"	1'-6"	2'-0"	2'-0"	2'-0"	2'-6"	2'-6"	2'-6"	2'-6"
K	8"	8"	8"	8"	1'-0"	1'-0"	1'-0"	1'-0"	1'-3"	1'-3"	1'-6"
L	1'-5"	1'-6"	1'-7"	1'-9"	1'-11"	2'-2"	2'-5"	2'-6"	2'-9"	3'-0"	3'-6"

NOTE: FOR 72" HEADWALL ONLY VERTICAL BARS V1 SHOWN IN SECTION A-A AS "#4 BARS AT 12" O/C" SHALL BE #5 BARS AT 12" O/C

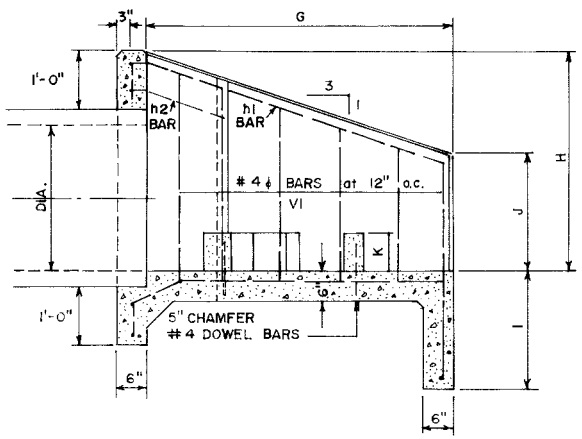

SECTION A-A

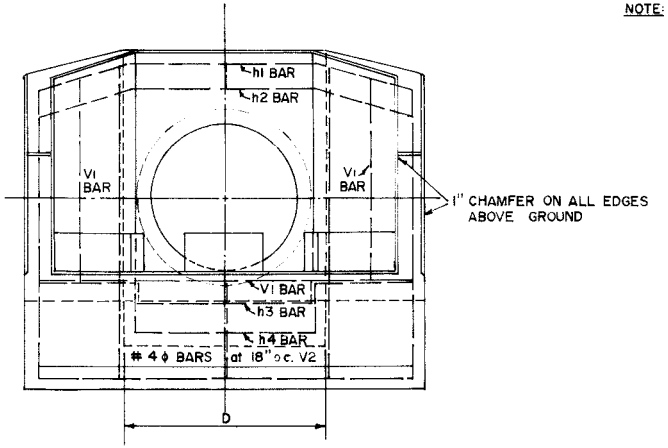

END VIEW

HIGH VELOCITY OUTLET

CITY OF MEMPHIS
DIVISION OF ENGINEERING

DESIGN STANDARD FOR TYPE "E" HEADWALL WITH WINGWALLS

PRINCIPAL CIVIL ENGINEER — 12-19-79

DEPUTY DIRECTOR / CIVIL ENGINEER — DATE

DWG. NO. 21

JC5756