BUREAU STREET DESIGN BUREAU ENGINEER DRAFTSMAN D.H.G. DATE 6-85 SCALE N.T.S.

REVISIONS			
NO.	DATE	BY	REMARKS
1	3-10-88	D.H.G.	REMOVED DEPARTMENT (T. BLK.)

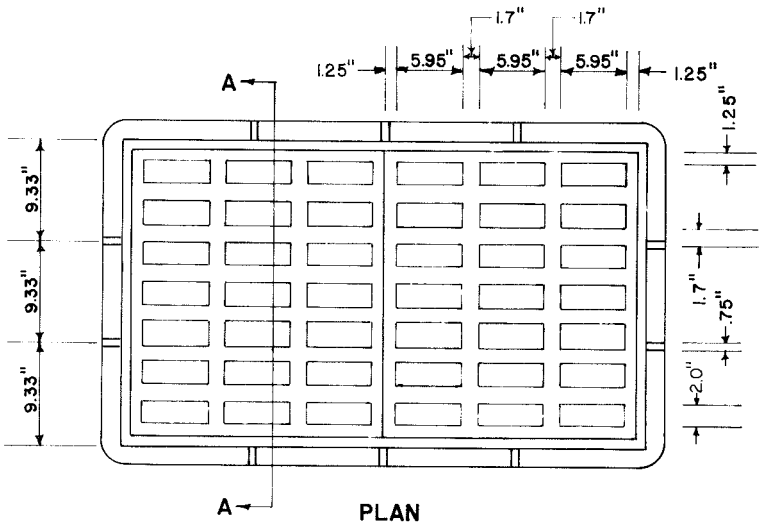

PLAN

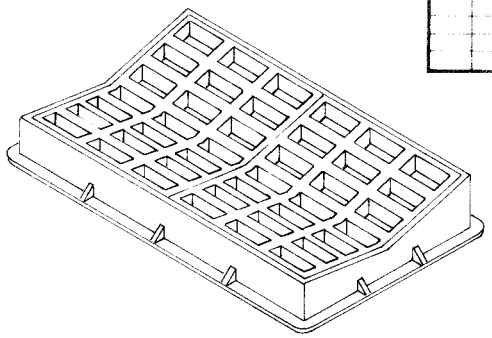

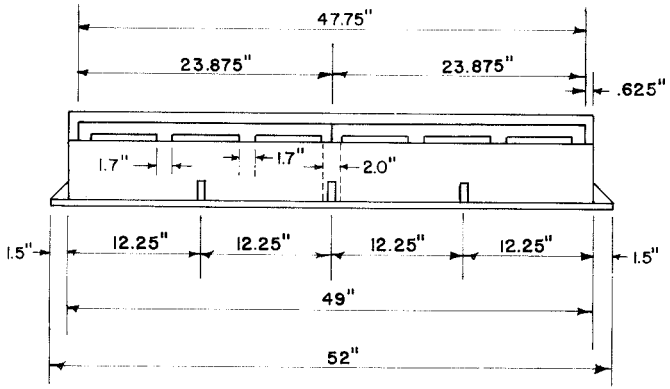

FRONT VIEW

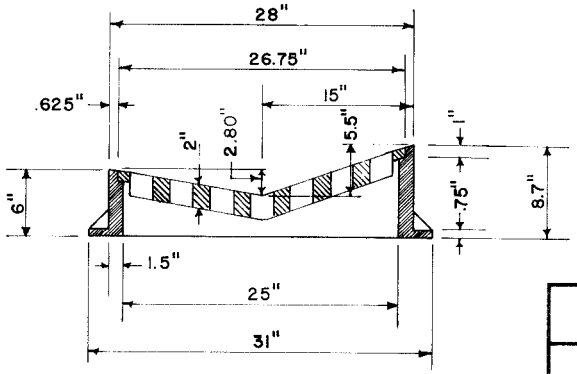

SECTION A-A

CITY OF MEMPHIS
DIVISION OF ENGINEERING

DESIGN STANDARD FOR VALLEY GUTTER INLET

Bryant Bondurant P.E. — CITY ENGINEER

Geo. W. Reed — COUNTY ENGINEER

DWG. NO. 14

JC5756