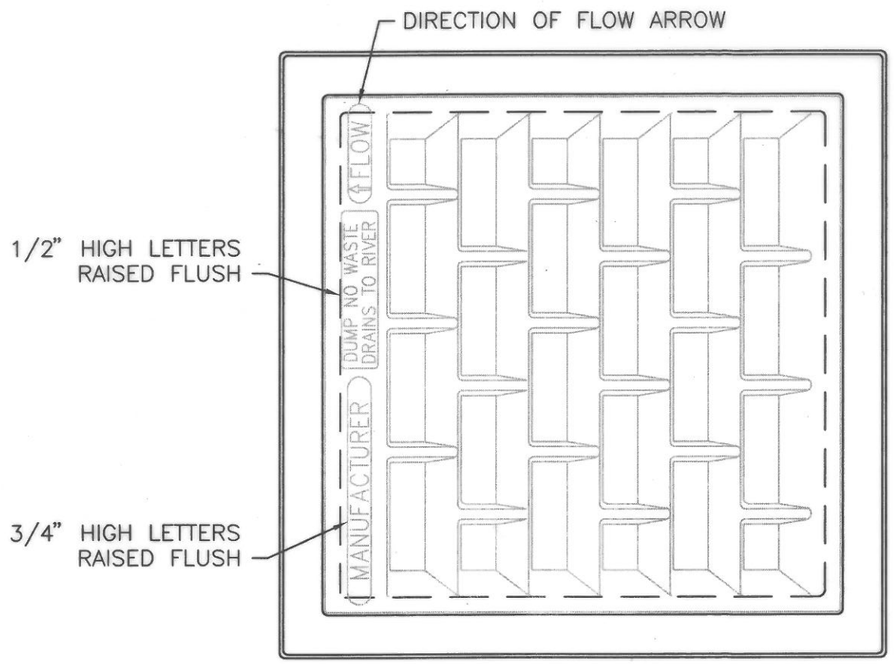

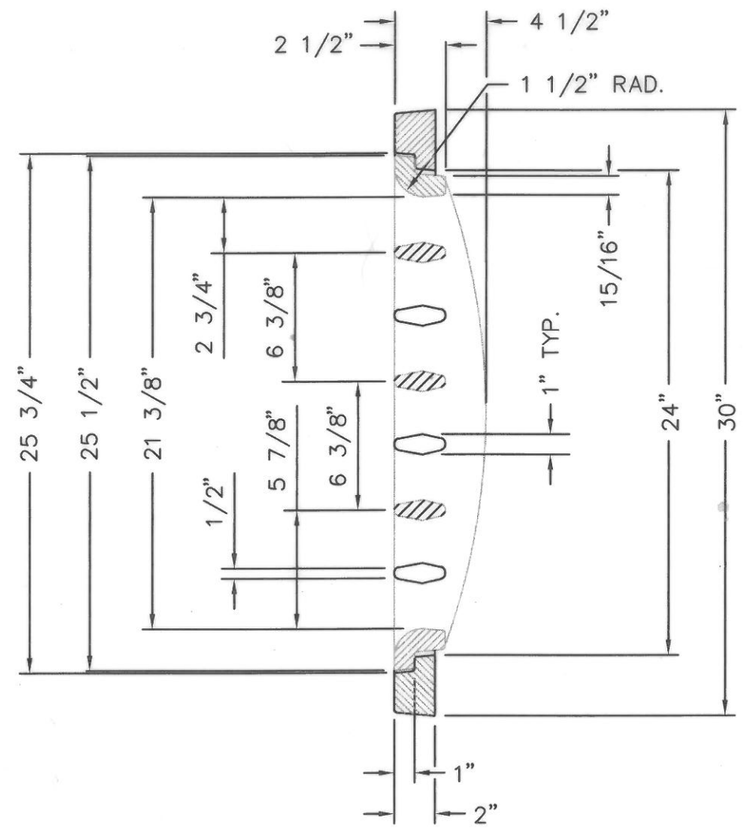

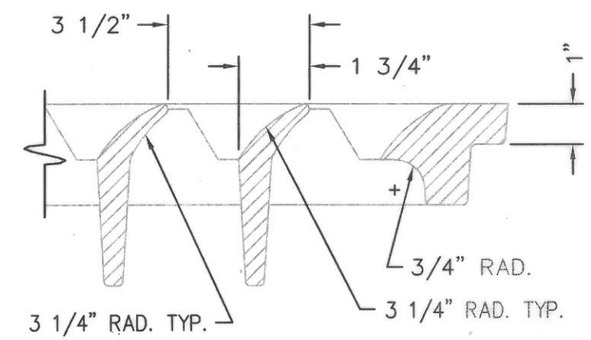

DETAIL OF SECTION

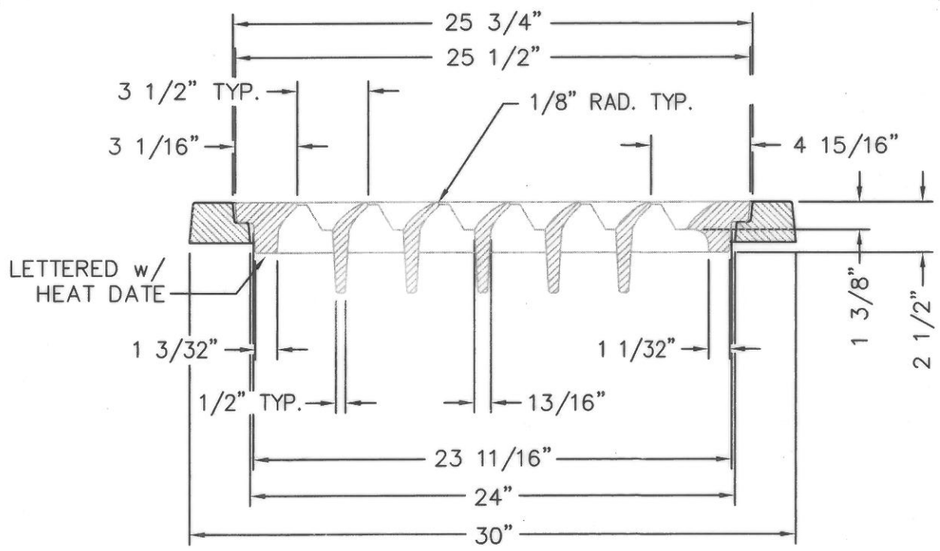

NOTE:

1. ALL DRAFT ON GRATE IS 5° UNLESS CALLED OUT.
2. OPEN AREA OF GRATE IS 312 SQ. IN.

REVISIONS			
NO.	DATE	BY	REMARKS

MATERIAL:	CAST GRAY IRON CLASS 35B	ASTM A48-94a
FINISH:	NO PAINT	
WEIGHT:	FRAME 155 LBS. GRATE APPROX. 180 LBS.	

CITY OF MEMPHIS
DIVISION OF ENGINEERING

DESIGN STANDARD
FOR
ALTERNATE RIM AND GRATING FOR #10 INLET

Wain Cashion — CITY ENGINEER — 6/17/03 DATE

DWG. NO. 50

AutoCAD File: STD50 BUREAU: CIVIL DESIGN BUREAU ENGINEER: DRAFTSMAN: L.R.H. DATE: 2-03 SCALE: N.T.S.