REQUEST FOR BID

FOR

Lick Creek Interceptor CIPP

RFB No. 179821.71.0406

June 18, 2015

City of Memphis, Tennessee

Black & Veatch Corporation and Overland Contracting Inc. (OCI), a subsidiary of Black & Veatch Corporation, are the Program Manager and Construction Manager respectively, for the SARP10 Program for the City of Memphis.

Overland Contracting Inc.
3485 Poplar Avenue, Suite 230, Memphis, TN, 38111

Table of Contents

00170 - Request for Bid 1
00170.1 Introduction 1
00170.2 Program Overview 1
00170.3 Scope of Work 1
00170.4 Bid Guarantee Requirements 1
00170.5 Request for Bid Definitions 2
00170.7 Clarification of Bid 2
00170.8 Not Used 2
00170.9 Responsiveness 3
00170.10 Examination of Request for Bid Documents 3
00170.11 Interpretations and Addenda 3
00170.12 Modification or Withdrawal of Bid Submittals 3
00170.13 Rejection of Responses 4
00170.14 Other Items 4
00170.15 Selection Process 4
00170.16 Selection Schedule 4
00170.17 Mandatory Pre-Bid Meeting 5
00270 - Instructions to Bidders 6
00270.1 Bidder's Compliance with Request for Bid 6
00270.2 General Bid Parameters 6
00270.3 Bid Pricing 6
00270.4 Supplemental Bid Information 6
00270.5 Schedule Compliance 7
00270.6 Compliance with Request for Bid 7
00270.7 Bid Attachments 7
00270.8 Declarations 7
00270.9 Nondiscrimination 7
00270.10 Equal Business Opportunity Program (EBO) 8
00370 - Commercial Bid Form (10 pages) 9
00571 - Supplementary Terms and Conditions 10
00571.1 Notices and Correspondence 10
00571.2 Not Used 11
00571.3 Payment Terms 11
00571.4 Security Instruments 11
00571.5 Liquidated Damages 11
00571.6 Taxes 12
00572 - General Terms and Conditions 13
00572.1 Definitions 13
00572.2 Interpretation 14
00572.3 Subcontractor’s Status 14
00572.4 Invoicing and Payment 14
00572.5 Schedule 15
00572.6 Waivers of Lien 15
00572.7 Assignment and Subcontracting 15
00572.8 Passage of Title, Risk of Loss, and Delivery 15
00572.9 Final Completion 16
00572.10 Warranty 16
00572.11 Compliance with Laws 16
00572.12 Business Practices 17
00572.13 Claims 18
00572.14 Subcontract Revisions and Work Authorizations 18
00572.15 Non-Disclosure 18
00572.16 Suspension of Work 19
00572.17 Termination for Cause 19

00572.18 Termination Without Cause 19
00572.19 Not Used 19
00572.20 Indemnity 19
00572.21 Insurance Requirements 19
00572.22 Audit 20
00572.23 Governing Law and Disputes 21
00574 – Jobsite Operations Terms and Conditions 22
00574.1 Subcontractor Scope of Work 22
00574.2 Safety Requirements 22
00574.3 Labor 22
00574.4 Protection and Restoration of Property 22
00575 - Safety, Health and Accident Prevention 24
00575.1 Project Safety and Health Program 24
00575.2 Safety, Health, and Accident Prevention Program 24
00575.3 Hazardous Waste Project Health and Safety Plan 24
00575.4 Protective Clothing, Equipment and Instrumentation 24
00575.5 Safety and Health Representative 25
00575.6 Safety and Health Goal 25
00575.7 Drug Prevention Program 25
00672 - General Conditions Attachments 27
00672.1 Waiver and Release of Lien Rights 27
00672.2 Final Waiver and Release of Lien Rights 29
00672.3 Certificate of Nondiscrimination (1 page) 31
00672.4 Equal Business Opportunity Program 32
00672.5 Report of Disadvantaged Business Enterprise Participation Form (1 page) 34
00672.6 State Revolving Fund (SRF) Front-Ends (56 pages) 35
00672.7 Bid Bond 36
00672.8 Schedule Impact Due to Weather 37
00672.9 Code of Conduct 39
00770 – Loss Control Manual 40
Technical Specifications 41

00170 - Request for Bid

00170.1 Introduction

Sealed bids will be received at the Office of the City of Memphis Environmental Administration, Room 620, City Hall, 125 N. Main, Memphis, TN 38103, until **3:00 p.m. local time, July 15, 2015** for furnishing the City of Memphis with the following:

FOR THE DIVISION OF: PUBLIC WORKS FOR THE CONSTRUCTION OF:
SARP10 Program Lick Creek Interceptor CIPP Project

The Sealed Bid envelope must be labeled with the project name, bidder's name, license bidder number, license expiration date, license classification. The Sealed Bid envelope must contain one (1) hardcopy of the bid and one (1) electronic CD copy of the bid.

Sealed Bids that are sent through the mail or other such delivery service shall be sent in such a manner so as to allow the opening of the "Mailing Container" and still have intact the sealed Bid. On the Mailing Container the sender shall state the words that a "**SEALED RESPONSE IS ENCLOSED**" and the Bid number.

Subcontractors intending to bid on this project must have submitted Registration documents electronically to B&V/OCI per the instructions included in Advertisement Legal Notice Request for Bid No. 179821.71.0406 dated **June 18, 2015** and Registration documents due **July 7, 2015.**

00170.2 Program Overview

The Program consists of the management of the capital program needed to bring the City's wastewater and sewer system into compliance with federal and state regulations per The City of Memphis Wastewater Collection and Transmission System (WCTS) Condition Assessment and Rehabilitation Program Consent Decree signed on September 21, 2012, including the procurement of studies, design and construction services associated with the City of Memphis SARP10 Program.

00170.3 Scope of Work

The general scope of work for this RFB is the furnishing of labor, equipment, and materials for the Lick Creek Interceptor CIPP.

00170.4 Bid Guarantee Requirements

Guarantee Requirements:

(a) Bidder will not withdraw bid for one hundred eighty (180) calendar days after opening of bids without Purchaser's written consent.

(b) If bid is accepted, bidder will enter into formal Subcontract with Purchaser, within five (5) calendar days after receipt of Subcontract documents for execution.

(c) If bid is accepted, bidder will execute required 100% Performance/Payment Bond in accordance with Article 00571.4 and will obtain required insurance coverage in accordance with Article 00572.21 within ten (10) calendar days after receipt of Subcontract.

(d) All bids will require a bidder's bond or certified or cashier's check made payable to the Purchaser on a solvent bank in the amount of 5% of the bid. Said instrument to remain in effect and will be returned only after the Subcontract has been fully executed and secured. Additionally, the successful bidder shall execute a performance bond in an amount equal to 100% of the Subcontract sum as security for the faithful performance of the Subcontract and for the payment of labor and material furnished and incorporated

into the Work. The only acceptable form of instrument for this bid bond is bound herein, Article 00672.7.

Bidder shall be liable to the Purchaser for full amount of bid guarantee as representing damage to the Purchaser on account of default of bidder if:

(a) Bid is withdrawn within one hundred eighty (180) calendar days after receipt of bids without approval by Purchaser.

(b) Bidder fails to enter into contract with Purchaser and execute required Performance Bond and provide required insurance coverage within ten (10) calendar days subsequent to notice of award of the Subcontract.

Firms desiring to submit a Bid should carefully review these instructions. Compliance with all requirements will be solely the responsibility of the Respondent.

00170.5 Request for Bid Definitions

Terms used in this Request for Bid documents are defined and have the meanings assigned to them as follows. The term "OCI", “Purchaser” or “Program Manager” means Overland Contracting Inc. The term "Respondent", “Firm”, “Company”, “Subcontractor” or “Bidder” means one who submits a Response for the purpose stated in this Solicitation Request for Bid documents. The terms “BID”, “Response” or “Respondent's Response” mean all submittal documents provided by the Respondent as required by this Request for Bid. The terms “Request for Bid” or “Bid Documents” mean the documents included in this Request for Bid.

Every effort has been made to use industry-accepted terminology in this Request for Bid. Any statement in this document, which uses words such as "must", "shall", "should", "provide for" or "have/provide the capability of/for", means that compliance with the intent of the statement is mandatory and that failure by the Respondent to satisfy that intent may be cause for the Response to be rejected.

00170.6 Disadvantaged Business Enterprise (DBE) and Minority Business Enterprise/ Women Business Enterprise (M/WBE) Requirements

This section shall set forth the respondent's DBE and M/WBE Participation Plan that must be submitted and include: (1) the level and dollar amount of participation your firm anticipates to achieve in the performance of the Subcontract resulting from this RFB; (2) the type of Work to be performed by the DBE and M/WBE firms participating; and (3) the names of the DBE and M/WBE firms the Respondent plans to utilize in the performance of the Subcontract resulting from this RFB.

DBE SRF Fair Share Goals:
MBE minimum 2.6%
WBE minimum 2.6%
(Vendors from the TDOT TNUCP DBE list, other State or Federal lists, or the City of Memphis EBO list)

SARP10 DBE Participation Goal:
DBE minimum 15%
(Vendors from the City of Memphis EBO list only)

00170.7 Clarification of Bid

Purchaser reserves the right to obtain clarification of any point in a Response or to obtain additional information as necessary to properly evaluate a particular Response. Failure to respond to such a request for additional information or clarification in a timely manner may result in rejection of the Response.

00170.8 Not Used

00170.9 Responsiveness

Respondents should respond to all requirements of the Bid to the maximum extent possible and are required to clearly identify any limitations or exceptions to the requirements.

00170.10 Examination of Request for Bid Documents

Before submitting a Response, each Respondent must:

Study and carefully correlate the Respondent's observations and responses with the Bid Documents.

Notify Purchaser, of all conflicts, errors and discrepancies, if any, in the Bid Document submitted.

Review the Loss Control Manual and State Revolving Fund (SRF) Documents.

Respondents by and through the submission of their Response, agree that they shall be held responsible for having therefore familiarized themselves with the nature and extent of the requirements in the Bid Documents.

00170.11 Interpretations and Addenda

If any prospective Firm is in doubt as to the true meaning of any part of the Requirements For Preparing and Submitting Bid Submittal for the requested services, they may submit a written request (verbal requests will not be accepted) for an interpretation up to **July 7, 2015.** The person submitting the request will be responsible for its prompt delivery. Any interpretation of the proposed documents will be made only by addendum transmitted to each party receiving a set of such documents. Purchaser will not be responsible for any other explanations or interpretations of the proposed documents. Any requests not submitted within this time period will be deemed waived.

SUBMIT ALL QUESTIONS IN WRITING OR BY E-MAIL TO:
SARP10 Program
Attn: Brad Davis
3485 Poplar Ave, Suite 230
Memphis, TN 38111
E-Mail: DavisBJ@bv.com
Cc: KinkelaarAB@bv.com
(Reference: SARP10 Program Lick Creek Interceptor CIPP, BID SUBMITTAL No. 179821.71.0406)

Each written request must reference the Bid name and number "*SARP10 Program Lick Creek Interceptor Project, Bid No. 179821.71.0406*" in the subject line and mailed (or e-mailed) to the attention of Brad Davis, Project Manager with a copy to Aaron Kinkelaar, Project Procurement Manager. All requests or questions should be clearly marked and must be received no later than the date and time listed in the Selection Schedule.

A response will be returned via addendum to all Firms along with the original question(s).

There shall be no communication between the Firm, their employees or subcontractors concerning this Bid to anyone within Black & Veatch, OCI, Allen & Hoshall, Allworld Project Management, Gresham Smith and Partners, Integrated Circles Technologies, Carter-Malone Group, or City of Memphis employee or any such person's spouse, child, parent, brother, sister, dependent or person assuming a relationship being the substantially equivalent of the above except through Brad Davis. **Failure to comply with this requirement will be grounds for disqualification.**

00170.12 Modification or Withdrawal of Bid Submittals

Responses may be modified or withdrawn by an appropriate document duly executed (in the same manner that a Response must be executed) and delivered to the place where Responses are to be submitted at any time prior to the submission deadline. A request for withdrawal or a modification must

be in writing and signed by an authorized person. Evidence of such authority must accompany the request for withdrawal or modification. Withdrawal of a Response will not prejudice the rights of a Responder to submit a new Response prior to the Response deadline. After expiration of the period for receiving Responses, only Purchaser may request clarifications or additional information.

00170.13 Rejection of Responses

To the extent permitted by applicable local, state and federal laws and regulations, Purchaser reserves the right to reject any and all Responses, to waive any and all informalities not involving price, time, or changes in the Work with the successful Respondent, and the right to disregard all non-conforming, non-responsive, unbalanced or conditional Responses. Also, Purchaser reserves the right to reject a Response, in its sole discretion, if the City of Memphis believes that it would not be in its best interest to make an award to that Respondent.

Purchaser reserves the right to reject any Response if the evidence submitted by the Responder or if the investigation of such Respondent fails to satisfy Purchaser that such Respondent is properly qualified to carry out the obligations and to complete the Work contemplated therein. All Responses will be rejected if there is reason to believe that collusion exists among Respondents. Responses will be considered irregular and may be rejected if they show serious omissions, alterations in form, additions not called for, conditions or unauthorized alterations, or irregularities of any kind.

00170.14 Other Items

This Bid does not commit Purchaser to enter into a Subcontract, nor does it obligate Purchaser to pay for any costs incurred in the preparation and submission of Responses or in anticipation of a Subcontract. Costs of preparing the Bid in response to this request are solely the responsibility of the Respondent.

By responding to this solicitation, the respondent attests that no employee of Black & Veatch, OCI, Allen & Hoshall, Allworld Project Management, Gresham Smith and Partners, Integrated Circles Technologies, Carter-Malone Group, or City of Memphis employee or any such person's spouse, child, parent, brother, sister, dependent or person assuming a relationship being the substantially equivalent of the above, has an existing or pending, direct or indirect, financial interest in the respondent's business.

No Respondents to this solicitation shall discriminate against any employee or applicant for employment because of race, religion, color, sex, age, or national origin.

00170.15 Selection Process

Purchaser intends to select one Firm based on price and successful completion and approval of the SARP10 Registration process. There is a local contractor preference of 5%. For evaluation purposes the 5% will be applied to the Total Estimated Unit Price Value.

00170.16 Selection Schedule

The following schedule will be adhered to during the selection process. It is subject to change at the sole discretion of SARP10.

Event	Completed By
Advertising Date, RFB available, Vendor Registration for Prequalification open	June 18, 2015
Mandatory Pre-Bid Meeting	July 1, 2015 at 9am
Last date for Bidder's Questions, Registration for Prequalification Information deadline	July 7, 2015
Issue Addendum for answers to questions	July 10, 2015
Receive all Bids	July 15, 2015 by 3:00pm local time

Event	Completed By
Public Opening	July 15, 2015 immediately following receipt of bids
Public Notice of Award	July 20, 2015
Tentative Notice to Proceed	July 31, 2015
Preconstruction Meeting with Subcontractor	August 3, 2015

00170.17 Mandatory Pre-Bid Meeting

A mandatory pre-bid meeting will be held from **9:00 A.M to 10:00 A.M (local time)** at **Benjamin Hooks Central Library 3030 Poplar Avenue Memphis, TN 38111** on **July 1, 2015**. You are required to attend the pre-bid meeting at your own cost. Contact Purchaser at least two calendar days before the pre-bid meeting in order to coordinate your attendance.

00270 - Instructions to Bidders

00270.1 Bidder's Compliance with Request for Bid

Provide the information requested and any supporting information necessary to permit a complete analysis of your bid. You acknowledge that preparation and submission of a bid will be at your sole cost and that you will treat this RFB and any resulting discussions as confidential. If you do not agree to treat this RFB and associated discussions as confidential, return the complete RFB to Purchaser and delete or destroy any copies you made.

00270.2 General Bid Parameters

Provide the information requested in Section 00270 and Section 00370 in the appropriate fields of Section 00370. Complete each line of Section 00370 in its entirety and submit it with your bid in accordance with Section 00170. Do not alter Section 00370 forms in any way or deviate from the terminology used or the unit of measure indicated when completing Section 00370. Submit Section 00370 forms in their original core application software, with no embedded programming and no permissive encoding restricting access to the data provided.

00270.2.1 Bidder's Contact Information

Include contact information for your representative in Article 00370.2.1. Your representative must have the appropriate expertise and authority to negotiate on behalf of your company.

00270.2.2 Addenda to Request for Bid

In Article 00370.2.2, list all addenda received from Purchaser and indicate "Yes" to show your receipt of and incorporation of the listed addenda into the bid. Address any exceptions or clarifications to addenda in accordance with Article 00270.6.

00270.3 Bid Pricing

You must include numerical values in the applicable fields of Tables 00370.3.1 through 00370.3.3. Non-numerical values, such as "included" or "not applicable," are not acceptable. Purchaser will evaluate fields left blank or filled with a zero as scope included in your bid at no cost.

00270.3.1 Unit Pricing

Provide the unit prices to perform the Work in accordance with this RFB in Table 00370.3.1. A unit price is the total amount to be billed to Purchaser for a specific unit of work. Unit pricing includes all costs, overhead, profit and mark-up associated with delivering the complete unit.

00270.4 Supplemental Bid Information

00270.4.1 Company Status

In Article 00370.4.1, indicate the type of your organization's legal entity and the state and country in which it is organized.

00270.4.2 Contractor License

If you are not licensed to perform the Work, indicate "No" in Article 00370.4.2. If you indicate "No," declare an exception in accordance with Article 00270.6.

00270.4.3 Not Used

00270.4.4 Bid Validity Period

Indicate "Yes" in Article 00370.4.4 if your bid is valid for one hundred eighty calendar days after the Bid Due Date (the "Bid Validity Period"). If you indicate "No" in Article 00370.4.4, provide the number of calendar days that your bid is valid in Article 00370.4.4 and declare an exception in accordance with Article 00270.6. Purchaser may reject your bid without prior notice if your bid is not valid for the full Bid Validity Period.

00270.4.5 Firm Non-Escalatable Pricing

Indicate "Yes" in Article 00370.4.5 if the bid pricing is firm and not subject to escalation. If you indicate "No," declare an exception in accordance with Article 00270.6 and include the terms of escalation in your exception.

00270.4.6 Taxes

Tax requirements are identified in Article 00571.6. Indicate "Included" in Article 00370.4.6 if your bid includes the tax requirements. If you indicate "Excluded" in Article 00370.4.6, declare an exception in accordance with Article 00270.6.

00270.4.7 Work at Jobsite

Identify the type of craft labor.
If you plan to subcontract any of the Work, indicate “Yes” in the appropriate section of Article 00370.4.7 and complete Table 00370.4.7.

00270.5 Schedule Compliance

Indicate "Yes" in Article 00370.5 if you can meet the schedule dates included in Table 00370.5. If you indicate "No," submit an alternative summary level schedule with your bid.

00270.6 Compliance with Request for Bid

00270.6.1 Declared Exceptions to RFB Requirements

An exception is any variation from an express RFB requirement. Declare all exceptions, whether commercial or technical in nature, in Table 00370.6.1. Provide specific exceptions and accurately reference the article number to which each exception applies. Exceptions of a general nature or that refer to your standard specifications or terms are not acceptable and may result in Purchaser rejecting your bid without prior notice.

00270.6.2 Declared Clarifications to RFB Requirements

A clarification is the means by which you offer to meet an RFB requirement if the RFB does not identify the specific means by which the RFB requirement must be met. Declare any clarifications, whether commercial or technical in nature, in Table 00370.6.2. Reference the article number to which each clarification applies.

00270.7 Bid Attachments

List any supplemental documents included in your bid in Article 00370.7.

00270.8 Declarations

Indicate "Yes" in Article 00370.8 to confirm you have familiarized yourself with the conditions affecting the Work. If you indicate "No," declare an exception in accordance with Article 00270.6.

00270.9 Nondiscrimination

All entities contracting with the Purchaser agree to abide by and to take affirmative action when necessary to ensure compliance with the nondiscrimination clauses set out below, and agree to show proof of non-discrimination upon request and to post in conspicuous places available to all associate agents and their employees. In the event of non compliance with nondiscrimination clauses, or with provisions of Executive Orders 11141 (age), 11246, 11375 (women), 12086 (Vietnam veterans), 11478 (federal employees), 11625 (minority business) 11701 (veterans), Title 41, Chapter 60 (handicapped) and specifically the handicapped affirmative action clause in Section 60-741.6.9 of OFCCP Rules, and any and all other federal laws prohibiting discrimination, contracts may be canceled, terminated, or suspended in whole or in part by the Purchaser.

The Bidder shall execute the specified Nondiscrimination Certificate (see Section 00672.3) agreeing that, if awarded the Subcontract, he/she shall not discriminate against any Sub-subcontractor, employee, or applicant for employment on the grounds of race, color, national origin or sex, in accordance with the

citations listed in the above paragraph; and shall require the execution of such a certificate for each Sub-subcontractor prior to award of any subcontract with the further requirement that each subcontractor shall include identical requirements in any lower tier subcontracts which might in turn be made. FAILURE TO EXECUTE AND SUBMIT SUCH CERTIFICATE WITH THE BID MAY CAUSE THE BID TO BE REJECTED AS NON-CONFORMING. The successful Bidder and all Sub-subcontractors under the general contract shall maintain copies of their payrolls and all subcontracts for each weekly payroll period for the life of the construction and for a period of **SEVEN (7) YEARS** after final release and payment is made by the Purchaser to the contractor.

00270.10 Equal Business Opportunity Program (EBO)

The Bidder must complete and return the Equal Business Opportunity Program Compliance Form included in Section 00672.4 of this RFB.

00370 - Commercial Bid Form (10 pages)

00370 - Commercial Bid Form

Bidder should refer to Section 00270, Instructions to Bidders, when completing this Bid Form. Bidder shall complete this form entirely and return it with Bidder's Bid.

00370.1 Bid Submitted by	**Bidder Response Column**
Company Name	
Mailing Address/Number, Street	
Mailing Address/State, Zip Code	
Country	
Taxpayer ID Number (or EIN)	
Bidder's Bid Date	
Bidder's Bid No.	
00370.2 General Bid Parameters	
Bidder is providing the information defined by the articles comprising Section 00270, INSTRUCTIONS TO BIDDERS, in the corresponding fields of this Section 00370, COMMERCIAL BID FORM.	
00370.2.1 Bidder's Contact Information	**Bidder Response Column**
Bidder's Representative Name	
Title	
Mailing Address/Number, Street	
Mailing Address/City	
Mailing Address/State, Zip Code	
Delivery Address/Number, Street	
Delivery Address/State, Zip Code	
Country	
Email Address	
Phone Number	**( ) - ( )**
Mobile Phone Number	**( ) - ( )**
Fax Number	**( ) - ( )**
Business Interruption Plan	
Confirm that Bidder maintains a Business Interruption/Disaster Recovery Plan that documents how Bidder will respond to disaster or pandemic to help minimize impact - Yes/No If Yes, plan should be submitted with RFB.	
00370.2.2 Addenda to Request for Bid	
Bidder acknowledges receipt and inclusion of the following Addenda to the RFB - **Yes/No**	**Bidder Response Column**

	Addenda Number	**Date Issued**	**Received and Incorporated**

00370.3 Bid Pricing Information	
00370.3.1 Bid Prices	**See Attached Pricing Table(s) [Bidder to List Tables Used]**
00370.4 Supplemental Bid Information	
Bidder provides the following information to supplement the Bidder's bid pricing.	
00370.4.1 Company Status	**Bidder Response Column**
Bidder's company status is:(i.e., partnership, individual owned, joint venture, corporation, etc.)	
in State of	
in Country of	
00370.4.2 Contractor License	**Bidder Response Column**
Bidder certifies that it is licensed, as required, to engage in the RFB Work scope in the State/Province/Country the RFB Work is to be performed. - **Yes/No**	
1st License Title	
in State/Province of	
License Number	
2nd License Title	
in State/Province of	
License Number	
00370.4.3 DUNs Number	

00370.4.4 Bid Validity Duration	**Bidder Response Column**
Bidder's bid is valid for acceptance by the Purchaser for a period of 180 days from the bid due date. - **Yes/No**	
If no, Bidder's bid is valid for indicated days from bid due date. - **No. Days**	
00370.4.5 Firm Non-Escalatable Pricing	**Bidder Response Column**
All of Bidder's prices herein bid are firm and are non-escalatable. - **Yes/No** If No, explanation is included as an Exception.	
00370.4.6 Taxes	**Bidder Response Column**
Bidder's prices included herein are in accordance with Article 00571.6 Taxes. - **Yes/No** If No, explanation is included as an Exception.	
00370.4.7 Work at Jobsite	**Bidder Response Column**
Bidder's source of craft labor to be utilized in the performance of the Work is - **Open-Shop/Merit-shop/Union-shop**	
If applicable, identify the local union(s) used for hiring craft labor: 1st Local Union Name	
Address/Number, Street	
Address/City, State, Zip Code	
Phone	
Email	
2nd Local Union Name	
Address/Number, Street	
Address/City, State, Zip Code	
Phone	
Email	
Bidder has accounted for all Jobsite existing and controlling conditions and limitations which may affect the Work performance and the Bidder's Bid. - **Yes/No** If No, explanation is included in Exception.	
Bidder proposes that it will perform all the Work at the Jobsite with its own forces. - **Yes/No**	
Bidder has indicated proposed sub-subcontracted Work in attached Table 00370.4.7. - **Yes/No**	
Bidder has provided proposed Small Business/Minority/Disadvantaged Entrepreneur Participation Plan with its bid. - **Yes/No**	
00370.5 Schedule Compliance	
Bidder agrees to meet the schedule dates indicated in the RFB documents: - **Yes/No** If No, explanation is included in Exception.	
If No, Bidder has completed and submitted an attached alternative summary level schedule: - **Yes/No**	
00370.6 Compliance with Request for Bid	
NOTE: A bid based on Bidder's standard terms and conditions will not be considered. The bid must address specific exceptions, if any, to Purchaser's terms and conditions.	
Bidder certifies that its bid complies with all RFB commercial and technical requirements without exception and clarification. - **Yes/No**	
00370.6.1 Exceptions	
Bidder certifies that its bid complies with all RFB commercial and technical requirements except for the following:	**Bidder Response Column**
Bid is based on acceptance of all commercial requirements of this RFB. - **Yes/No**	
If No, all Commercial Exceptions have been accurately defined and identified as "Commercial Exceptions" on the Purchaser provided and Bidder attached Exceptions Form: - **Yes/No**	
Bid is based on acceptance of all technical requirements of this RFB. - **Yes/No**	
If No, all Technical Exceptions have been accurately defined and identified as "Technical Exceptions" on the Purchaser provided and Bidder attached Exceptions Form. - **Yes/No**	

00370.6.2 Clarifications	**Bidder Response Column**
Bidder certifies that its bid complies with all RFB commercial and technical requirements without clarification. - **Yes/No**	
If No, all Commercial Clarifications have been accurately defined and identified as "Commercial Clarifications" on the Purchaser provided and Bidder attached Clarification Form. - **Yes/No**	
If No, all Technical Clarification have been accurately defined and identified as "Technical Clarifications" on the Purchaser provided and Bidder attached Clarification Form. - **Yes/No**	
00370.7 Bid Attachments	
In addition to this Commercial Bid Form and Tables indicated herein, the Bidder's Bid contains supplemental information and details attached to this bid consisting of the following:	**Bidder Response Column**
(Attachment 1)	
(Attachment 2)	
(Attachment 3)	
(Attachment 4)	
(Attachment 5) (Add additional lines as needed)	
00370.8 Declarations	
The Bidder declares that it has familiarized itself with the conditions affecting the Work. The Bidder also declares that only the persons or firms interested in the bid as principal or principals are named herein; that no other persons or firms have any interest in this bid or in the Subcontract to be entered into; that this bid is made without connection with any person, company, or party likewise submitting a bid; and that it is in all respects for and in good faith, without collusion or fraud. - **Yes/No**	
If written notice of acceptance of this bid is delivered to the Bidder within "Bid Validity" days after the date set for receipt of bid, or any time thereafter before the bid validity expires, the Bidder will, within 5 days after receipt of a formal Subcontract for signature, exercise and deliver to Purchaser a signed Subcontract in the form provided by the Purchaser in accordance with the documents provided herein. - **Yes/No**	

Table 00370.3.1 - Unit Price Bid Form

Bidder should refer to Section 00270, Instructions to Bidders, when completing this Bid Form. Bidder shall complete this form entirely and return it with Bidder's Bid.

Bid Submitted by (Company Name)

00370.3 Bid Pricing Information

00370.3.1 Unit Pricing

Bidder proposes to complete the RFB Work based on firm, fixed, unit prices (US dollars), which prices multiplied by the final Work quantities would represent the full consideration to Bidder for its complete and satisfactory performance of the Work in compliance with all the terms and conditions of the RFB Documents. The Unit Prices in this Table include the cost of all the work which is required or implied by the RFB documents or which may be inferred therefrom, and which is customarily provided in furnishing a complete and finished work item of its kind. Further, any and all alterations, modifications, and adjustments to the work item, which is reasonably foreseeable or customarily encountered in providing and installing equipment, material, and services of the work item kind, will be performed without additional compensation.

In the event of a Purchaser-approved change in the scope of Work for which a unit price from this Table is not applicable, as determined by the Purchaser, the Subcontractor shall provide a new unit price for review and acceptance by the Purchaser. Subcontractor shall provide all information requested by the Purchaser to substantiate the value of the new unit price.

00370.3.1.1 Unit Prices

Item Number	Item Description	Unit of Measure	Estimated Quantity	Bidder Response Columns: Unit Price	Bidder Response Columns: Extension Price
00001-6.01	GPS Coordinates of Manhole Cover	EA	17	$ -	$ -
00001-6.03	MACP Level 2 Manhole Inspections	EA	17	$ -	$ -
00003-6.01	Light Cleaning & Mainline CCTV Inspection For All Diameters	LF	1917	$ -	$ -
00004-6.01	CCTV & Sonar Inspection for Each Diameter	LF	8266	$ -	$ -
00009-6.01	Cementitious Manhole Lining	VF	84	$ -	$ -
00009-6.02	Traffic Control per Manhole Repair	EA	17	$ -	$ -
00009-6.03.01.08	8" Diameter Drop Construction in Existing Manhole	VF	13	$ -	$ -
00009-6-04	Invert and Bench Replacement	EA	5	$ -	$ -
02532-5.01	Standard Manhole Adjustment (Adjustments >5" & <18")	EA	5	$ -	$ -
02532-5.02	Manhole Adjustments with Adapter Rings (Adjustments <5")	EA	3	$ -	$ -
02532-5.03	Traffic Control per Construction Area	EA	8	$ -	$ -
02532-5.04	Site Preparation and Restoration	LS	1	$ -	$ -
02540-5.01.07	Sewer Point Repair, 20” Through 24” Pipe (<10’ Deep)	EA	3	$ -	$ -
02540-5.02	Traffic Control per Point Repair	EA	3	$ -	$ -
02540-5.03	Site Preparation and Restoration per Point Repair	LS	1	$ -	$ -
02540-5.04	Pavement Backfill	Ton	38	$ -	$ -
02950-01.01	Asphaltic Concrete Pavement Removal and Replacement	SY	10	$ -	$ -
02950-02	Concrete Sidewalk Removal and Replacement	SF	30	$ -	$ -
02950-04	Concrete Curb and Gutter Removal and Replacement	LF	10	$ -	$ -
09910-7.01.01	18" Diameter CIPP (0-10 feet depth)	LF	630	$ -	$ -
09910-7.01.02	18" Diameter CIPP (10.1-20 feet depth)	LF	189	$ -	$ -
09910-7.01.03	20" Diameter CIPP (0-10 feet depth)	LF	906	$ -	$ -
09910-7.01.04	20" Diameter CIPP (10.1-20 feet depth)	LF	192	$ -	$ -
09910-7.01.05	24" Diameter CIPP (0-10 feet depth)	LF	1922	$ -	$ -
09910-7.01.06	24" Diameter CIPP (10.1-20 feet depth)	LF	3118	$ -	$ -
09910-7.01.07	27" Diameter CIPP (0-10 feet depth)	LF	2060	$ -	$ -
09910-7.01.09	36" Diameter CIPP (0-10 feet depth)	LF	1166	$ -	$ -
09910-7.02	Lateral Reinstatement	EA	76	$ -	$ -
09910-7.03	Cut Intruding Tap	EA	25	$ -	$ -
09910-7.04	Permanent Service Lateral Renewal	EA	1	$ -	$ -
09910-7.05	Traffic Control for CIPP	EA	45	$ -	$ -
	100% Performance and Payment Bonds	Lot	1	$ -	$ -
				Total Estimated Unit Price Value	$ -

Note the Subcontractor shall provide documentation to determine compensated cost per point repair using the rates described above.

Table 00370.4.7 - Sub-Subcontracts

Bidder should refer to Section 00270, Instructions to Bidders, when completing this Table.

Bid Submitted by (Company Name)

00370.4.7 Sub-Subcontracts

Bidder proposes that specific portions of the Work scope not performed by Bidder will be Sub-Subcontracted to the Sub-subcontractors indicated below. The value of each Sub-subcontract is indicated as an approximate percentage value of the total monetary value of the Bidder's Bid.

Subcontractor must obtain a safety prequalification for any Sub-subcontractor that will be performing any portion of the Work at the Jobsite, prior to their arrival at the Jobsite. Refer to the "Subcontracting" article within the terms and conditions for applicable submission information.

00370.4.7.1 Sub-Subcontracted Work

Scope of Sub-Subcontracted Work	Sub-subcontractors (Name and Address)	MBE or WBE	% of Total Work Value	Safety Information Included (Y/N)	Current EMR
% of Work performed by Bidder.	(Bidder Company Name)		100.0%		
(a)					
(b)					
(c)					
(d)					
(e)					
(f)					
(g)					
	Total Percentage Value (Must Equal 100%)		100.0%		

Table 00370.6.1 - Exceptions Form

Bidder should refer to Section 00270, Instructions to Bidders, when completing this Form.

Bid Submitted by (Company Name)

00370.6.1 Exceptions

The Bidder's specific Exceptions herein itemized and included with the bid represent an exhaustive list of any and all explicit variations or deviations from the requirements of the RFB documents. Bidder confirms that otherwise, it is the intent of Bidder's bid that the Work will be performed in strict accordance with the requirements of the RFB documents.

00370.6.1.1 Commercial Exceptions

Count	Reference Article	Stated Commercial Exception
CE1		
CE2		
CE3		
CE4		
CE5		
CE6		
CE7		
CE8		
CE9		

00370.6.1.2 Technical Exceptions

Count	Reference	Stated Technical Exceptions
TE1		
TE2		
TE3		
TE4		
TE5		
TE6		
TE7		
TE8		
TE9		
TE10		
TE11		
TE12		
TE13		
TE14		
TE15		
TE16		
TE17		
TE18		
TE19		
TE20		

Table 00370.6.2 - Clarifications Form

Bidder should refer to Section 00270, Instructions to Bidders, when completing this Form.	
Bid Submitted by (Company Name)	
00370.6.2 Clarifications	
All of Bidder's Clarifications herein itemized and included with the bid **do not** constitute explicit variation or deviation from performance of the Work by the Bidder in strict accordance with the requirements of RFB documents.	

00370.6.2.1 Commercial Clarifications

Count	Reference Article	Stated Commercial Clarification
CC1		
CC2		
CC3		
CC4		
CC5		
CC6		
CC7		
CC8		
CC9		

00370.6.2.2 Technical Clarifications

Count	Reference	Stated Technical Clarification
TC1		
TC2		
TC3		
TC4		
TC5		
TC6		
TC7		
TC8		
TC9		
TC10		
TC11		
TC12		
TC13		
TC14		
TC15		
TC16		
TC17		
TC18		
TC19		
TC20		

00370.7 Schedule Compliance
State any exceptions in 00370.6.1.

00370.7.1 Construction Milestone Completion Dates				
Item	**Milestone Description**	**Construction Milestone Completion Date**	***LDs Apply?**	**Bidder Complies? (Yes/No)**
1	Completion of work as described in the Notice to Proceed	120 days after receiving the Notice to Proceed from Purchaser	Yes	
*LD indicates that completion of the Work after the "Construction Milestone Completion Date" is subject to liquidated damages per applicable Articles of Section 00571.				
*Note Subcontractor performance will directly impact future procurements for the SARP10 Program, schedule is critical and must be maintained.				

00370.8 Schedule of Submittals

Effective Date: TBD

The following are post-award Subcontract submittals. This list is not all-inclusive. The RFB documents contain submittal requirements that are not included in this list. It will, however, remain the successful Bidder's responsibility to comply with submittal requirements whether or not the submittal is included in the following list:

If Bidder does not agree, state an exception in 00370.6.1.

Item	Reference Section	Submittal Item	Submittal Dates: Calendar Days		Submittal Dates: Event	Submittal Dates: Due Date	Bidder Agrees? Yes/No
00370.8.1 Commercial Submittals							
C01	None	Executed Subcontract in the form provided by the Purchaser	5	After	Receipt of Subcontract for Signature		
C02	00571	Payment Estimate Breakdown	10	After	Effective Date and Prior to First Payment with monthly updates		
C03	00571	Security Instruments	10	After	Effective Date		
C04	00572	Lien Waivers and Report of Disadvantaged Business Enterprise Participation Form		With	Each Invoice		
C05	00572	Final Lien Waivers from Subcontractor and Sub-subcontractors and Sub-subcontractors subcontractors and Report of Disadvantaged Business Enterprise Participation Form		With	Final Invoice		
C06	00571	Final Payment Invoice and Report of Disadvantaged Business Enterprise Participation Form	45	After	Issuance of the Notice Of Final Completion and Acceptance		
C07	00572	Contractor Licenses	14	Before	Mobilization Onsite		
C08	00572	Written Notice and Supporting Documentation, of all Claims	5	After	Occurrence of Event Giving Rise to the Claim		
C09	00572	Insurance Certificates for Purchaser Approval		Prior to	Mobilization		
C10	00572	Initial Issue Subcontractor's Work Execution Schedule	30	After	Effective Date		
C11	00571	Subcontractor Actual Man-hours Expended and Quantities Installed	Weekly	After	Mobilization Onsite		
C12	00575	Subcontractor's Daily Report	Daily	After	Mobilization Onsite		
C13	00575	Signed Daily Reports		Daily	After Mobilization Onsite		
C14	00575	Weekly Coordination Meeting Agenda Input	Weekly	Prior to	Weekly Coordination Meeting		
C15	00575	Subcontractor's Safety, Health and Accident Prevention Program		Prior to	Mobilization Onsite		
C16	00575	Subcontractor's Hazardous Waste Project Health and Safety Plan		Prior to	Mobilization Onsite		
C17	00575	Safety and Health Representative Resume		Prior to	Assignment and Mobilization		
C18	00575	Verification of meeting Hazardous Waste Requirements of 29CFR1910.120	5	Prior to	Mobilization Onsite		
C19	00575	Hazardous Materials Documentation		With	Each Hazmat Shipment		
C20	00575	Safety and Health Records	Monthly	After	Mobilization Onsite		
C21	00575	Evidence that Jobsite Personnel have Passed Drug Testing	10	Prior to	Mobilization Onsite		
C22	Loss Control Manual	Fall Protection Plan	5	Prior to	Starting Work Operations		
C23	Loss Control Manual	Chemical Hazard Communication Plan, as applicable	5	Prior to	Mobilization Onsite		
C24	Loss Control Manual	Substance Abuse Program	5	Prior to	Mobilization Onsite		
C25	SRF	W-9 of Subcontractor and Sub-subcontractors also include Contact Information for each including email and address		With	Bid		
C26	00672.3	Certificate of Nondiscrimination for Subcontractor and Sub-subcontractors		With	Bid		
C27	00672.4	Equal Business Opportunity Program Compliance Form for Subcontractor and Sub-subcontractors		With	Bid		
C28	00672.6	Certification Regarding Debarment Subcontractor and Sub-subcontractors		With	Bid		

00370.8 Schedule of Submittals

Effective Date: TBD

The following are post-award Subcontract submittals. This list is not all-inclusive. The RFB documents contain submittal requirements that are not included in this list. It will, however, remain the successful Bidder's responsibility to comply with submittal requirements whether or not the submittal is included in the following list:

If Bidder does not agree, state an exception in 00370.6.1.

Item	Reference Section	Submittal Item	Submittal Dates: Calendar Days		Submittal Dates: Event	Submittal Dates: Due Date	Bidder Agrees? Yes/No
C29	00672.6	Certification Regarding Equal Employment Opportunity for Subcontractor and Sub-subcontractors		With	Bid		
C30	SRF	M/WBE Certificates for both Subcontractor and Sub-subcontractors as applicable		With	Bid		
	00170.4	Bid Bond		With	Bid		
C31	SRF	EPA Form 6100-2 for DBE/MBE/WBE Sub-subcontractors	10	After	Effective Date and as updated		
C32	SRF	EPA Form 6100-3 for DBE/MBE/WBE Sub-subcontractors		With	Bid and as updated		
C33	SRF	EPA Form 6100-4 for Subcontractor		With	Bid and as updated		
C34	SRF	Employee Rights under the Davis-Bacon Act Poster (English and Spanish)		Posted	All Sites to be easily accessed/viewed and protected from weather		
C35	SRF	WH-1321 poster		Posted	All Sites to be easily accessed/viewed and protected from weather		
C36	SRF	Wage Decision		Posted	All Sites to be easily accessed/viewed and protected from weather		

00571 - Supplementary Terms and Conditions

00571.1 Notices and Correspondence

The parties agree to send all notices arising out of or related to this Subcontract by one of the following methods: (a) personal delivery; (b) certified mail with return receipt; (c) nationally recognized overnight mail or courier service, with delivery receipt requested; or (d) email. The parties may send routine correspondence by email or first class mail, each without confirmation of receipt. The parties agree to address notices and correspondence as indicated in this article. Subcontractor agrees that delivery of a notice or of correspondence by Purchaser to Subcontractor's at the jobsite constitutes personal delivery.

Electronic Technical Correspondence

Addressed to Purchaser:	**Addressed to Subcontractor:**
To: Brad Davis	To: [[name]]
DavisBJ@bv.com	[[email address]]
Cc: Gary Older	Cc: [[name]]
OlderGS@bv.com	[[email address]]

Non-Electronic Technical Correspondence

Addressed to Purchaser:	**Addressed to Subcontractor:**
Overland Contracting Inc.	[[subcontractor entity]]
3485 Poplar Avenue, Suite 230	[[street address]]
Memphis, TN 38111	[[city, state, zip code]]
Attention: Brad Davis	Attention:
179821.71.0406	179821.71.0406

Electronic Commercial Correspondence (excluding invoices)

Addressed to Purchaser:	**Addressed to Subcontractor:**
To: Aaron Kinkelaar	To: [[name]]
KinkelaarAB@bv.com	[[email address]]
	Cc: [[name]]
	[[email address]]

Non-Electronic Commercial Correspondence (excluding invoices)

Addressed to Purchaser:	**Addressed to Subcontractor:**
Black & Veatch	[[subcontractor entity]]
8400 Ward Parkway	[[street address]]
Kansas City, MO 64114	[[city, state, zip code]]
Attention: Aaron Kinkelaar	Attention:
179821.71.0406	179821.71.0406

Electronic Invoices
Prior to Invoice submission to BVAPMarkView@bv.com, Subcontractor will send a copy to OlderGS@bv.com, DavisBJ@bv.com and ChenJ2@bv.com for review and approval. Once approved, Subcontractor will be notified to submit the Invoice to BVAPMarkView@bv.com. Subcontractor shall utilize the A1A form, available upon request.

Original Invoice:	**With a Copy to:**
To: Overland Contracting Inc.	To: Julia Chen
BVAPMarkView@bv.com	ChenJ2@bv.com
Fax (866) 941-9458	
Attention: BVAP	
179821.71.0406	

00571.2 Not Used

00571.3 Payment Terms
The following payment terms shall apply in addition to the corresponding provisions contained in Article 00572.4 Invoicing and Payment.

The Parties will meet each month at an agreed time in order to determine the quantity of materials used and man-hours expended during the invoice period. The Parties will use the field progress measurement system to calculate that month's payment total by adding the Subcontract unit price totals based on actual Work completed.

00571.4 Security Instruments
Subcontractor shall give Purchaser separate performance and payment bonds in the format of AIA Document 312 - 2010 Performance Bond and Payment Bond, each in the amount of the Subcontract Price. Subcontractor shall submit the bonds to Purchaser by the due date specified in the Article titled "Schedule of Submittals and Applicable Liquidated Damages". The bonding company must be licensed to bond in the state in which the Project is located and must be rated "A" or better by A.M. Best and included in the Department of the Treasury's Listing of Approved Sureties (Department Circular 570).

00571.5 Liquidated Damages

00571.5.1 General
Subcontractor's failure to meet the requirements identified in this Article 00571.5 will cause Purchaser to incur harm that will be very difficult to ascertain with certainty. The Parties therefore agree the liquidated damages specified in this Article 00571.5 represent a reasonable estimate of Purchaser's harm and are not intended as a penalty. Subcontractor's obligation to pay liquidated damages for breach of one specified requirement does not relieve Subcontractor of its obligation to pay liquidated damages for breach of another specified requirement. Subcontractor's payment of liquidated damages for breach of the specified requirement is Purchaser's sole and exclusive remedy with regard to Subcontractor's breach of that requirement, except for any other express remedies stated in the Subcontract. If Purchaser terminates the Subcontract for cause, liquidated damages will cease to accrue after the termination date and Subcontractor's remaining liability will be calculated in accordance with Article 00572.17.

00571.5.2 Not Used

00571.5.3 Construction Milestone Dates
Each construction milestone subject to liquidated damages for late completion is listed in the article titled "Construction Milestone Completion Dates and Applicable Liquidated Damages". If all portions of the

Work comprising the construction milestone do not meet the Subcontract requirements on the construction milestone completion date, liquidated damages will accrue for each failure as shown below.

> Beginning on the first calendar day after the specified construction milestone completion date for each construction milestone and continuing until the construction milestone is completed, delay liquidated damages will be assessed at the rate of five hundred dollars ($500.00) per calendar day.

00571.6 Taxes

Subcontractor shall pay all payroll and other related employment compensation taxes for Subcontractor's employees, federal, state and other taxes which may be assessed on Subcontractor's income from the Project, engineering and business license costs (collectively, the "Subcontractor Taxes"). Subcontractor shall administer and pay all sales, use, gross receipts and excise taxes (collectively, the "Project Taxes"). Subcontract price includes Subcontractor Taxes and all Project Taxes. Purchaser will not be responsible for any additional charges related to tax that were not included as part of the Subcontract Price. Where applicable, Purchaser shall furnish to Subcontractor a certificate complying with state and local governmental laws, regulations and ordinances identifying any components of the Work to be considered exempt from the Project Taxes. Subcontractor shall cooperate with Purchaser to establish appropriate procedures and minimize the amount of such taxes to the extent reasonable and practical. Subcontractor is responsible for all property taxes on the construction equipment; Owner is responsible for property taxes on all other items incorporated into the project. Subcontractor shall notify Purchaser, and Purchaser shall have the right to review prior to Subcontractor's response to such document, of any correspondence with a federal or local taxing authority as it relates to sales and use, gross receipts, or excise taxes.

00572 - General Terms and Conditions

00572.1 Definitions

The terms below have the following definitions when used in this Subcontract:

"Applicable Laws" means all laws, statutes, regulations, codes, rules, treaties, ordinances, judgments, permits, decrees, approvals, interpretations, injunctions, writs, orders, or other legal requirements of a governmental body entitled to exercise any administrative, executive, judicial, legislative, police, regulatory or taxing power and having jurisdiction over the jobsite or performance of the Work.

"Claims" means claims, actions, suits, liabilities, demands, damages, losses, costs, expenses (including reasonable attorneys' fees), impacts to price, impacts to schedule, awards, fines and judgments, of every kind and nature.

"Consent Decree" means the negotiated plan between Owner, Department of Justice, Environmental Protection Agency, Tennessee department of Environment and Conservation, and the Tennessee Clean Water Network that requires Owner to develop and implement plans to improve its wastewater systems.

"Construction Schedule" means the detailed network schedule developed by Purchaser..

"Effective Date" means the date on which Purchaser releases Subcontractor to proceed with all or part of the Work, whether the release occurs under a written notice to proceed issued prior to execution of this Subcontract or by execution of this Subcontract.

"Final Completion" means (a) the Work is complete and complies with the requirements of this Subcontract; and (b) Subcontractor has fulfilled all of its obligations under this Subcontract except obligations that survive completion of the Work.

"Indemnified Parties" means Owner and its officials, Purchaser, Purchaser's engineer, and the parent companies, related companies, affiliated companies, subsidiaries, successors, and assigns of each, including the shareholders, officers, directors, partners, employees, and agents of each of the above firms. "Indemnified Parties" does not include Subcontractor or any Sub-subcontractor.

"Notice to Proceed" means to written notice provided by Purchaser to Subcontractor releasing Subcontractor to proceed with all or part of the Work.

"Owner" means the City of Memphis, Tennessee.

"Parties" means Purchaser and Subcontractor.

"Program Manager" means Black & Veatch Corporation or Overland Contracting Inc. (OCI)

"Purchaser" means the party so identified in the Subcontract Agreement.

"SARP10 Program Office" 3485 Poplar Avenue, Suite 230, Memphis, TN 38111

"Specifications" means Purchaser's documents describing the technical and other requirements of the Work, and the codes, standards, or specifications referenced in the documents.

"Subcontract" means the agreement between Purchaser and Subcontractor consisting of: (a) the Subcontract Agreement; (b) the documents listed in the Subcontract Agreement; (c) written Subcontract revisions; (d) attachments, appendices and exhibits to the Subcontract documents; (e) documents expressly incorporated by reference into the Subcontract; and (e) any requirements that can be reasonably inferred from any of the foregoing.

"Subcontract Agreement" means the Subcontract form executed by Purchaser and Subcontractor.

"Subcontract Price" means the total compensation to be paid to Subcontractor under this Subcontract.

"Subcontractor" means the party so identified in the Subcontract Agreement.

"Sub-subcontractor" means any party, at any tier, having an agreement with Subcontractor or with a Sub-subcontractor, to perform a portion of the Work.

"Technical Specifications" has the same meaning as "Specifications."

"US" or "USA" means the United States of America.

"Warranty Period" means a one year period of time after Final Completion is achieved, as may be extended pursuant to Article 00572.10.

"Work" means that which Subcontractor is to perform or provide under this Subcontract.

00572.2 Interpretation

00572.2.1 This Subcontract is the complete and final agreement between the parties relating to the Work. All prior or contemporaneous negotiations and agreements relating to the Work are superseded by this Subcontract. Exceptions or terms submitted by Subcontractor in the course of accepting this Subcontract are void.

00572.2.2 Provisions of this Subcontract that contemplate performance or obligations subsequent to completion or termination of the Work or contain waivers or limitations of liability will survive such completion or termination. Termination of the Work will not affect the rights and obligations that arose before termination.

00572.2.3 If any provision of this Subcontract is held to be unenforceable, the remaining provisions of this Subcontract will remain in effect.

00572.3 Subcontractor's Status

Subcontractor is an independent contractor in the performance of the Work. Subcontractor is solely responsible for the means, methods, sequences, procedures, and safety precautions used or adopted by Subcontractor and any Sub-subcontractor in the performance of the Work. Except as provided in Article 00574.2 and 00574.3, Subcontractor has sole authority and responsibility to employ, manage, discharge, and otherwise control its employees.

00572.4 Invoicing and Payment

00572.4.1 Subcontractor shall submit invoices to Purchaser with all documentation required to be submitted with the invoice. Each invoice must be itemized by the Subcontract line number. Each invoice must also clearly show the Subcontract number, the invoice number, the billing period (if applicable), the invoiced amount, retention (if applicable), and the net amount due. The final invoice must contain a copy of Purchaser's notice of Final Completion.

00572.4.2 Subcontractor agrees to provide additional itemization of the Subcontract price as Purchaser reasonably requests. If payment to Subcontractor will be on a time and material basis or a unit price basis, or if Subcontractor files a Claim under Article 00572.13, Subcontractor shall furnish Purchaser complete breakdowns and supporting information in the detail required by Purchaser to verify the accuracy of the invoiced or claimed amounts. Purchaser or Purchaser's designee may audit the aforementioned records at Purchaser's expense.

00572.4.3 Purchaser will withhold five percent retention from all invoices except the final invoice. Payment by Purchaser does not: (a) constitute approval or acceptance of any portion of the Work; (b)

waive any of Purchaser's rights; or (c) relieve Subcontractor from responsibility or liability arising out of or related to this Subcontract. Acceptance by Subcontractor of final payment constitutes a release and waiver of all Claims by Subcontractor against Indemnified Parties.

00572.4.4 Purchaser may withhold or set-off amounts due under this Subcontract on account of Claims arising out of or related to Subcontractor's breach or reasonably anticipated breach of this Subcontract.

00572.4.5 Once Work that has undergone specified QA/QC is submitted, reviewed and approved by the Program Manager, the Subcontractor's invoice will be submitted along with the Program Manager's next invoice to the Owner. The Program Manager's invoice is typically submitted during the second week of each month for work performed during the previous month. Typical payment from the Owner to the Program Manager is anticipated to be forty five (45) calendar days upon Owner's acceptance of invoice, and the Program Manager will cause the Purchaser to pay the Service Contractor within two weeks of Program Manager's receipt of payment from the Owner.

00572.5 Schedule

Performance of the Work as scheduled under this Subcontract is of the essence. Subcontractor shall give Purchaser written notice of any delay or anticipated delay within three calendar days after the occurrence of the event giving rise to the delay. Subcontractor's notice must identify the cause of the delay or the anticipated delay and the actions Subcontractor is undertaking to recover from or avoid the delay.

00572.6 Waivers of Lien

As a condition precedent to payment, Subcontractor shall furnish a lien waiver in the form of Article 00672.1 with each invoice except the final invoice. As a condition precedent to payment of the final invoice, Subcontractor shall furnish a lien waiver in the form of Article 00672.2 with the final invoice. If a lien is filed and Subcontractor does not remove or bond around the lien within seven calendar days after receipt of written notice from Purchaser or Owner, Purchaser or Owner may remove the lien. Subcontractor shall reimburse Purchaser or Owner, as applicable, for all costs and expenses incurred by Purchaser or Owner in removing the lien, including reasonable attorneys' fees and court costs.

00572.7 Assignment and Subcontracting

00572.7.1 Subcontractor may not assign all or part of this Subcontract voluntarily, by operation of law, or otherwise, nor may Subcontractor assign any of the money payable under this Subcontract, without obtaining Purchaser's prior written consent.

00572.7.2 Except for the supply of expendable materials and minor components or the supply of a portion of the Work for which a Sub-subcontractor is named in this Subcontract, Subcontractor may not subcontract the Work without first obtaining Purchaser's written consent. In addition, Subcontractor must obtain a safety prequalification from Purchaser for any Sub-subcontractor that will be performing any portion of the Work at the Jobsite, as outlined in Article 00575.10. If Subcontractor subcontracts any portion of the Work, Subcontractor remains responsible for complying with the Subcontract requirements and is liable to Purchaser for the acts and omissions of Sub-subcontractors, including their failure to comply with the requirements of this Subcontract or fulfill the obligations imposed on Subcontractor by this Subcontract, as if the acts and omissions were those of Subcontractor. Purchaser has the right to contact Sub-subcontractors to discuss their progress of the Work.

00572.8 Passage of Title, Risk of Loss, and Delivery

Subcontractor warrants that the Work (excluding Subcontractor-furnished items that are not intended to become a permanent part of the project) will be free of all liens, claims, charges, security interests, encumbrances or defects in title. Title to the Work (excluding Subcontractor-furnished items that are not intended to become a permanent part of the project) will pass to Purchaser upon the earlier of Subcontractor's receipt of payment or delivery of the Work to the jobsite. Subcontractor retains the risk of loss of the Work until Purchaser issues the notice of Final Completion. The terms of delivery have the

meanings assigned them in the 2010 edition of the Incoterms published by the International Chamber of Commerce, except as modified in this Subcontract.

00572.9 Final Completion

Subcontractor shall notify Purchaser in writing when Subcontractor believes the Work meets the requirements for Final Completion. Purchaser will inspect the Work within ten calendar days after Purchaser's receipt of Subcontractor's notice. If Purchaser identifies any defective or non-conforming Work, Subcontractor shall correct that Work in accordance with Article 00572.10. Purchaser will issue a notice that Final Completion has been achieved when the Work meets the requirements for Final Completion. Purchaser's issuance of the notice of Final Completion does not relieve Subcontractor of its obligations under this Subcontract.

00572.10 Warranty

00572.10.1 Subcontractor warrants to Purchaser and Owner that the Work: (a) will be new when delivered to the jobsite; (b) will be free from defects in design, material, and workmanship; (c) will comply with Applicable Laws; (d) will comply with the requirements of this Subcontract; and (e) will be fit for the purposes specified. Subcontractor also warrants to Purchaser and Owner that elements of the Work for which this Subcontract does not establish express standards of quality and fitness will comply with good industry practices for the specific application. Subcontractor agrees that Owner may directly enforce the warranties of this Article 00572.10.1.

00572.10.2 Subcontractor shall correct any breach of this warranty within five calendar days after Purchaser gives Subcontractor written notice of the breach. The cost of warranty work and removal or replacement of other work will be at Subcontractor's expense. Subcontractor shall work diligently and without interruption to correct the breach. In the case of emergency where, in the reasonable judgment of Purchaser, delay could result in serious loss or damage to persons or property, Purchaser may correct the defect or nonconformity at Subcontractor's expense.

00572.10.3 The warranty for the Work extends until one year after Final Completion of the Work as released under the Article titled "Construction Milestone Completion Dates." The warranty applies to all repairs and replacements to the same extent the warranty applies to the original Work. The warranty period for repaired Work or replacements will be extended for a period of one year after the repair or replacement is complete or until the original warranty period expires, whichever occurs later.

00572.10.4 Subcontractor acknowledges that Owner's failure to achieve 100 percent compliance with the Consent Decree requirements may result in the imposition of penalties, costs , and other damages imposed against the Owner and Purchaser. To the extent caused by Subcontractor's failure to perform the Work in accordance with this Subcontract or to the extent caused by the negligence of Subcontractor or any Sub-subcontractor. Subcontractor agrees to pay penalties and costs incurred by Owner and Purchaser under the Consent Decree.

00572.11 Compliance with Laws

00572.11.1 Subcontractor shall comply with all Applicable Laws in effect during its performance of Work, including but not limited to the City of Memphis Living Wage Ordinance, City of Memphis Prevailing Wage Ordinance, Davis Bacon, the Fair Labor Standards Act, Occupational Safety and Health Administration (OSHA), and the Americans with Disabilities Act (ADA). Subcontractor shall obtain all licenses, permits, and inspections applicable to the Work except for licenses, permits, and inspections identified in this Subcontract as Purchaser's or Owner's responsibility. Subcontractor shall also comply with the USA's Foreign Corrupt Practices Act.

00572.11.2 Living Wage Ordinance:
The Prime Agreement is subject to Living Wage Ordinance #5185 as amended by Ordinance #5257 (effective July 1, 2008) that requires contractors who enter into a service contract with the City of Memphis to pay employees who work under the service contract a living wage. The minimum hourly

wage shall be at least $10.27 per hour with health benefits for employees and their dependents or $12.32 per hour without health benefits. Subcontractor is also subject this ordinance as a subcontractor of Purchaser performing services. Subcontractor will submit certified payrolls as required by the ordinance to Purchaser, and Purchaser will forward to Owner. Copies of the ordinances are posted on Owner's website (www.memphistn.gov). Once on the homepage, click on the "Business" link, and then click on "Doing Business with the City" link. A link to the ordinance will be on the top right side under the section "Links". Annual adjustments to the rates will be posted on the site for the next year in February. Davis Bacon rates shall apply only if they are higher than the City of Memphis Living Wage Ordinance. Also if the Subcontract price is higher than $500,000.00 the City of Memphis Prevailing Wage Rates applies unless the rates are lower than the Davis Bacon rates and then Davis Bacon rates would apply.

00572.11.3 Purchaser and Subcontractor shall abide by the requirements of 41 CFR §§ 60-1.4(a), 60-4.3(a), 60-300.5(a) and 60-741.5(a). These regulations prohibit discrimination against qualified individuals based on their status as protected veterans or individuals with disabilities, and prohibit discrimination against all individuals based on their race, color, religion, sex, or national origin. Moreover, these regulations require that covered prime contractors and subcontractors take affirmative action to employ and advance in employment individuals without regard to race, color, religion, sex, national origin, protected veteran status or disability.

00572.11.4 Neither party shall engage in any conduct or activity in the performance of this Subcontract that constitutes a conflict of interest under Applicable Laws.

00572.12 Business Practices

00572.12.1 Subcontractor shall uphold the good name and reputation of Purchaser and shall not take any action which is intended to or which causes damage to or discredits Purchaser. Subcontractor shall not:

(a) offer to give or agree to give any director, officer, employee or agent of any potential client a gift or consideration of any kind as an inducement or reward for: (i) doing or declining to do, or for having done or declined to do, any action in relation to obtaining or executing any contract or (ii) for showing or declining to show any favor or disfavor to any person in relation to any possible project; or

(b) induce or attempt to induce any officer, servant, or agent of any private or public body to depart from his or her duties to his or her client or, in the case of any officer, servant or agent of a public body, his or her duties to the applicable public body, the applicable body politic, or both.

00572.12.2 Subcontractor shall not engage or employ, on a full, part-time or any other basis during the term of the Prime Agreement and for a period of one year after the termination or expiration, any professional or technical personnel who are or have been at any time during the term of the Prime Agreement in the employ of Owner without the explicit written consent of the Owner.

00572.12.3 Nondiscrimination:

(a) Subcontractor certifies and agrees that all persons employed by it, its affiliates, subsidiaries, or holding companies are and will be treated equally without regard to or because of race, creed, color, religion, ancestry, national origin, sexual orientation, sex, age, condition of physical or mental handicap, marital status, or political affiliation, in compliance with all Applicable Laws. Subcontractor shall certify, at Purchaser's request, that it is in full compliance with all applicable EEO rules and laws.

(b) Purchaser and Owner reserve the right to investigate any claims of illegal discrimination by Subcontractor and in the event a finding of discrimination is made and upon written notification thereof, Subcontractor shall take all necessary steps to cure and rectify such action

to the reasonable satisfaction of Purchaser and Owner. Subcontractor's failure or refusal to do so shall be cause for termination of this Subcontract in accordance with the terms of this Subcontract.

00572.12.4 Purchaser is an affirmative action employer. Accordingly, the parties hereby incorporate by reference the requirements of Executive Order 11246, as amended, and the applicable regulations contained in 41 C.F.R. Parts 60-1 through 60-60; 29 U.S.C. Section 793 and the applicable regulations contained in 41 C.F.R. Part 60-741; 38 U.S.C. Section 4212 and the applicable regulations contained in 41 C.F.R. Part 60-250 and/or 60-300; and 29 C.F.R. Part 471, Appendix A to Subpart A.

00572.12.5 Subcontractor represents and warrants that it has a code of conduct or other set of compliance requirements that is at least as broad as Purchaser's Code of Conduct for Global Business Relationships (refer to Article 00672.9, hereinafter "Code of Conduct"), or that it will comply with Purchaser's Code of Conduct in all dealings that affect Purchaser.

00572.13 Claims

Subcontractor must give written notice, with appropriate supporting documentation, of all Claims for extra compensation or additional time for performance of the Work within five calendar days after occurrence of the event giving rise to the Claim. Subcontractor acknowledges that failure of Subcontractor to give Purchaser notice and appropriate supporting documentation within the required time frame constitutes a waiver of all Claims arising out of or related to the event.

00572.14 Subcontract Revisions and Work Authorizations

00572.14.1 Purchaser may make additions, deletions, reductions in scope, or other changes to the Work. If a proposed change will cause a material increase or decrease in Subcontractor's cost or time for performance, Subcontractor shall so notify Purchaser in writing, accompanied by supporting documentation, within three calendar days after Subcontractor's receipt of Purchaser's notice of change. If Purchaser agrees with Subcontractor's notice, the parties will negotiate an equitable adjustment to the Subcontract price, to the schedule, or both, in accordance with the Subcontractor's fee for overhead and profit as listed in Article 00572.14.2 below. These adjustments will be reflected in a written Subcontract revision. Subcontractor, however, shall proceed with the change as directed in a written Work authorization pending such agreement.

00572.14.2 The Subcontractor's fee for overhead and profit shall be determined as follows:

For costs incurred for labor the maximum fee shall be fifteen percent to the Subcontractor or the Sub-subcontractor performing the Work.

For costs incurred for materials and equipment the maximum fee shall be five percent to the Subcontractor or the Sub-subcontractor providing the materials and equipment.

If applicable, the Subcontractor may receive an additional fee of five percent on labor or materials and equipment performed or provided by a Sub-subcontractor, as long as the total combined fee does not exceed fifteen percent.

00572.14.3 A written Subcontract revision is required before Subcontractor is entitled to payment for the Work performed under the Work authorization. Subcontractor will bear the expense of performing any change not supported by a written Work authorization or written Subcontract revision. Purchaser will not be liable to Subcontractor for Claims arising from a decrease in the Work. No change is effective without a written Work authorization or a written Subcontract revision issued by Purchaser.

00572.15 Non-Disclosure

Subcontractor shall not make any news releases, authorize or participate in any interview concerning this Subcontract, or issue other advertising pertaining to the project or this Subcontract without the prior written approval of Purchaser. Subcontractor shall treat all information provided by Purchaser as

confidential and only disclose such information as necessary to perform the Work, and will require the employees, agents, and Subcontractors who need to know to adhere to the terms of this provision.

00572.16 Suspension of Work

Purchaser may, at any time and in its sole discretion, suspend performance of all or part of the Work by written notice to Subcontractor. If the suspension is unrelated to Subcontractor's failure to comply with this Subcontract, Purchaser will adjust the schedule to reflect the reasonable delay due to the suspension and will reimburse Subcontractor for the reasonable and direct additional costs incurred by Subcontractor due solely to the suspension. Subcontractor shall promptly resume performance of all or part of the suspended Work in accordance with Purchaser's written authorization to resume the Work.

00572.17 Termination for Cause

If Subcontractor defaults in any obligation under this Subcontract and does not cure the default within ten calendar days after receipt of Purchaser's written notice identifying the default, Purchaser may terminate all or part of the Work.

00572.18 Termination Without Cause

Purchaser may, at any time and in its sole discretion, terminate all or part of the Work. Subject to Subcontractor's compliance with this Subcontract, Subcontractor will recover from Purchaser, as the complete and final settlement for the terminated Work and all related Claims, a sum equal to Subcontractor's direct cost for the terminated Work satisfactorily performed as of the effective date of termination, plus an allowance for reasonable overhead and profit on such direct cost.

00572.19 Not Used

00572.20 Indemnity

00572.20.1 SUBCONTRACTOR AGREES TO DEFEND, INDEMNIFY, AND HOLD HARMLESS THE INDEMNIFIED PARTIES AGAINST ANY CLAIM, LOSS, DAMAGE, EXPENSE, OR LIABILITY (INCLUDING ATTORNEYS' FEES AND COSTS OF ANY SUCCESSFUL ENFORCEMENT OF THIS INDEMNITY ARTICLE) ARISING OUT OF THE PERFORMANCE OR NON-PERFORMANCE BY SUBCONTRACTOR OR ITS SUB-SUBCONTRACTORS, OR THEIR OFFICERS, EMPLOYEES, OR AGENTS.

00572.20.2 Providing that Purchaser is not in breach of its obligation to make payments to Subcontractor for the Work, Subcontractor shall indemnify, defend and hold harmless the Indemnified Parties from any claims or mechanic’s liens brought against the Indemnified Parties or against the Project as a result of the failure of Subcontractor, or those for whose acts it is responsible, to pay for any services, materials, labor, equipment, taxes or other items or obligations furnished or incurred for or in connection with the Work. Within three (3) days of receiving written notice from Purchaser that such a claim or mechanic’s lien has been filed, Subcontractor shall commence to take the steps necessary to discharge said claim or lien, including, if necessary, the furnishing of a mechanic’s lien bond. If Subcontractor fails to do so, Purchaser will have the right to discharge the claim or lien and hold Subcontractor liable for costs and expenses incurred, including attorneys’ fees.

00572.20.3 Subcontractor will immediately notify Purchaser of any claim or suit made or filed against Subcontractor or its Sub-subcontractors in which Purchaser or Owner is named as a co-defendant.

00572.21 Insurance Requirements

00572.21.1 Subcontractor shall, at its sole cost, maintain insurance as required by this Subcontract and shall impose the obligations of this Article 00572.21.1 on all Sub-subcontractors. Subcontractor shall give Purchaser ACORD insurance certificates evidencing the required coverage by the due date identified in the Article titled “Schedule of Submittals” and as Purchaser may request from time to time. Subcontractor shall ensure the policies:

(a) Contain a provision or endorsement that the coverage will not be cancelled, materially changed, or renewal refused unless the insurer gives at least thirty calendar days prior written notice to Purchaser.

(b) Remain in effect through the warranty period if coverage is occurrence-based and remain in effect at least one year after expiration of the warranty period if coverage is claims-based.

(c) Are primary with respect to insurance covering Indemnified Parties as additional insureds. All insurance carried by Indemnified Parties will be excess insurance.

(d) Contain a waiver of all rights of subrogation by the insurance carriers in favor of Indemnified Parties.

(e) Comply with all Applicable Laws of the jurisdiction in which any part of the Work is to be performed including, but not limited to, admitted and compulsory coverage.

(f) Are rated "A-" or better by A.M. Best's "Insurance Guide and Ratings."

00572.21.2 Subcontractor shall maintain broad form commercial general liability insurance protecting Subcontractor, and Indemnified Parties as additional insureds (using endorsements CG 20 10 and CG 20 37 or their equivalent), against claims arising out of bodily injury or property damage arising from the Work. The policy must include a cross-liability or severability of interest clause, a per project aggregate endorsement, and coverage for personal injury liability, contractual liability, products and completed operations (covering lawsuits brought in the USA and the country of the jobsite), explosion, building collapse, and damage to underground property. The policy must include coverage for riggers liability if applicable to the Work. Subcontractor shall maintain policy limits of at least one million dollars for each occurrence.

00572.21.3 Subcontractor shall maintain worker's compensation insurance protecting Subcontractor against all claims under applicable worker's compensation laws, including, but not limited to, the United States Longshoremen's and Harbor Worker's Act and the Jones Act. If Subcontractor is required to maintain worker's compensation insurance in the USA, the worker's compensation insurance must contain an "all states" or "other states" endorsement. For Work performed in the USA, Subcontractor shall also maintain employer's liability insurance protecting Subcontractor against claims for injury, disease or death of employees which are not covered by the worker's compensation insurance. Subcontractor shall maintain worker's compensation policy limits as required by statute and, if applicable to this Subcontract, employer's liability policy limits of at least one million dollars for each occurrence.

00572.21.4 Subcontractor shall maintain comprehensive automobile liability insurance protecting Subcontractor, and Indemnified Parties as additional insureds, against all claims for injuries to members of the public and damage to property of others arising from the use of motor vehicles, whether owned, non-owned, or hired. Subcontractor shall maintain policy limits of at least one million dollars for each occurrence.

00572.21.5 Subcontractor shall maintain umbrella liability insurance that follows the form of the commercial general liability insurance, the employer's liability insurance and the automobile liability insurance. The umbrella liability insurance must protect Subcontractor, and Indemnified Parties as additional insureds, against claims in excess of the limits of the commercial general liability insurance, the employer's liability insurance, and the automobile liability insurance. Subcontractor shall maintain policy limits of at least four million dollars for each occurrence.

00572.22 Audit

Purchaser reserves the right to audit the records of Subcontractor.

00572.23 Governing Law and Disputes

Claims and disputes arising out of or relating to this Subcontract will be governed by the law of the State of Missouri, USA, excluding provisions that would apply the law of another jurisdiction. Pending resolution of any claim or dispute, and without prejudice to Subcontractor's rights, Subcontractor shall continue to perform as directed by Purchaser.

00572.24 Hazardous Conditions

00572.24.1 Subcontractor is not responsible for any Hazardous Conditions encountered in the performance of the Work at the Jobsite. Upon encountering any Hazardous Conditions, Subcontractor will stop services immediately in the affected area and duly notify Purchaser. For purposes of this Subcontract, Hazardous Conditions is defined as any materials, wastes, substances and chemicals deemed to be hazardous under any Applicable Law or the handling, storage, remediation, or disposal of which are regulated by Applicable Laws and applies to any hazardous or toxic substance, material, or condition present at the locations in which the Work is performed which was not brought onto such site or sites by Service Contractor for the exclusive benefit of Subcontractor.

00572.24.2 Subcontractor shall be obligated to resume the Work at the affected areas only after Owner's expert provides it with written certification that (i) the Hazardous Conditions have been removed or rendered harmless and (ii) all necessary approvals have been obtained from all Governmental Authority having jurisdiction over the location.

00572.24.3 Subcontractor will be entitled, to an adjustment in its compensation and all times for performance of the Work to the extent Subcontractor cost or time of performance have been adversely impacted by the presence of Hazardous Conditions, subject to submission of appropriate documentation by Subcontractor and Subcontractor's duty to mitigate.

00572.25 Force Majeure

00572.25.1 If Subcontractor is delayed in the performance of the Work due to acts, omissions, conditions, events, or circumstances beyond its control, the times for performance shall be reasonably extended by on a not less than day for day basis. By way of example and not of limitation, events that will entitle Subcontractor to an extension of the times for performance include without limitation acts or omissions of Owner or Purchaser, or anyone under Owner's control (including separate contractors), Hazardous Conditions, wars, terrorism, civil unrest, actions and inactions of delay of Governmental Authorities, floods, labor disputes and unrest, unusual delay in transportation, epidemics, earthquakes, tsunami, adverse weather conditions, and acts of God.

00572.25.2 In addition to Subcontractor's right to a time extension for those events set forth above, Subcontractor shall also be entitled to an appropriate increase in the compensation due to the impacts or delays arising from such events. Subcontractor will file all claims in accordance with Article 00572.13.

00574 – Jobsite Operations Terms and Conditions

00574.1 Subcontractor Scope of Work

Except as expressly provided in this Subcontract, Subcontractor shall furnish all materials, tools, equipment, vehicles, supplies, services, labor and supervision required to perform the Work. Unless otherwise stated in this Subcontract, the Work includes unloading, off transport, hauling, receiving, storing, maintaining, protecting, erecting, installing, cleaning, adjusting, and all other work required to make the Work ready for use.

00574.2 Safety Requirements

00574.2.1 Subcontractor shall conduct all operations under this Subcontract in a manner that avoids the risk of bodily harm and damage to property. At a minimum, Subcontractor shall comply with the requirements of this Article 00574.2, Section 00575, the Loss Control Manual, and Owner's safety requirements. Subcontractor's failure to comply with the requirements of this Article 00574.2, Section 00575, the Loss Control Manual, or Owner's safety requirements constitutes a material breach of this Subcontract.

00574.2.2 When at the jobsite, Subcontractor shall continuously inspect all Work and conduct surveys of all Work areas to identify any unsafe condition and shall immediately take adequate precautions against any unsafe condition identified. Subcontractor is solely and exclusively responsible for the discovery and correction of such conditions. Subcontractor agrees that nothing contained in this Article 00574.2, Section 00575, the Loss Control Manual, or Owner's safety requirements shifts responsibility for bodily harm or damage to property sustained resulting from violation of those provisions from Subcontractor to Owner or Purchaser. Subcontractor remains solely and exclusively responsible for compliance with all safety requirements.

00574.2.3 Subcontractor shall immediately correct any unsafe condition identified by Purchaser. If, in Purchaser's sole discretion, Subcontractor has not taken sufficient precautions for the avoidance of bodily harm and damage to property, or in response to Purchaser's identification of an unsafe condition, Purchaser may stop the Work at Subcontractor's expense or implement suitable precautions at Subcontractor's expense, or both. Purchaser's right to stop the Work and to implement suitable precautions does not impose on Purchaser a duty to exercise those rights and does not relieve Subcontractor of responsibility for damage resulting from violation of this Article 00574.2, Section 00575, the Loss Control Manual, or Owner's safety requirements.

00574.2.4 Compliance with this Article 00574.2, Section 00575, the Loss Control Manual, and Owner's safety requirements is the minimum standard required of Subcontractor. Subcontractor is responsible for examining all Work-related requirements and determining whether additional or more stringent health and safety provisions are required or appropriate for the Work. Subcontractor shall notify Purchaser promptly in writing if a charge of noncompliance with this Article 00574.2, Section 00575, the Loss Control Manual or Owner's safety requirements has been filed against Subcontractor or a Sub-subcontractor in connection with the performance of the Work.

00574.3 Labor

Subcontractor shall designate a supervisor at the jobsite who has the authority to act on behalf of and to bind Subcontractor in all matters relating to or arising out of this Subcontract. The supervisor must be fluent in English. Subcontractor agrees to replace, at no cost to Purchaser, any Sub-subcontractor or any personnel of Subcontractor or Sub-subcontractor who Purchaser reasonably requests be replaced.

00574.4 Protection and Restoration of Property

00574.4.1 Subcontractor shall, at its expense, protect the Work, the environment, and all other property from hazards arising out of or relating to the Work and from natural elements. Subcontractor shall, at its expense, promptly repair or remove and replace any damage or loss and, to the extent practicable,

restore property affected by the Work to its original condition, as determined by Purchaser. Subcontractor is solely responsible for protection of the Work until Final Completion.

00574.4.2 At the completion of the Work, Subcontractor shall remove all Subcontractor-furnished items that are not intended to become a permanent part of the project from the jobsite and shall remove and deposit in Subcontractor-furnished waste facilities all scrap, trash, waste materials, and debris resulting from the Work. Subcontractor shall thoroughly remove all accumulations of dust, scraps, waste, oil, grease, weld spatter, insulation, paint, and other foreign substances resulting from performance of the Work and shall restore all surfaces affected by those substances.

00575 - Safety, Health and Accident Prevention

00575.1 Project Safety and Health Program

Purchaser will implement and coordinate the overall Project Safety and Health Program as defined in the Loss Control Manual which is available for inspection at the SARP10 Program Office.

00575.2 Safety, Health, and Accident Prevention Program

00575.2.1 Subcontractor shall implement and maintain a written Safety, Health and Accident Prevention Program specifically applicable to the Work. Subcontractor's Safety, Health and Accident Prevention Program must meet the requirements of Applicable Laws and adhere to the Project Safety and Health Program, if implemented by Purchaser. Subcontractor shall submit Subcontractor's Safety, Health and Accident Prevention Program for Purchaser's review at least thirty calendar days before starting Work at the jobsite. Purchaser's review does not relieve Subcontractor of Subcontractor's sole responsibility for safety and health in relation to the Work, nor does Purchaser's review limit Subcontractor's obligation to undertake any action necessary to establish and maintain safe working conditions relating to the Work at the jobsite. Subcontractor must include training, Master Job Hazard Analysis (JHA) and daily JSAs.

00575.2.2 Purchaser may monitor Subcontractor's safety and health performance and may require changes to Subcontractor's Safety, Health and Accident Prevention Program during the performance of the Work. Purchaser's monitoring and requirement of changes does not relieve Subcontractor of Subcontractor's sole responsibility for safety and health in relation to the Work, nor does Purchaser's monitoring and requirement of changes limit Subcontractor's obligation to undertake any action necessary to establish and maintain safe working conditions relating to the Work at the jobsite. Purchaser must approve sub-tier subcontractors prior to mobilization to the jobsite.

00575.3 Hazardous Waste Project Health and Safety Plan

00575.3.1 Subcontractor understands that the Work may involve hazardous substances or hazardous wastes. Subcontractor shall comply with all Applicable Laws, Owner's facility rules and regulations, and applicable guidance documents. Subcontractor shall prepare and implement a jobsite-specific Hazardous Waste Project Health and Safety Plan, based on Subcontractor's Safety, Health and Accident Prevention Program and all written programs required by Applicable Laws. Subcontractor is responsible for the completeness and accuracy of Subcontractor's Hazardous Waste Project Health and Safety Plan. Subcontractor shall submit Subcontractor's Hazardous Waste Project Health and Safety Plan to Purchaser at least thirty calendar days before starting Work at the jobsite and shall maintain a copy at the jobsite for review by Purchaser, Owner, and regulatory personnel.

00575.3.2 Before starting Work at the jobsite, Subcontractor shall submit written verification that:

(a) personnel assigned to the Work have received forty hour health and safety training that meets the requirements of 29 CFR 1910.120(e) or 1926.65(e);

(b) the assigned field supervisor has completed eight hours of supervisor training that meets the requirements of 29 CFR 1910.120(e)(4) or 1926.65(e)(4); and

(c) personnel assigned to the Work are participating in a medical surveillance program that meets the requirements of 29 CFR 1910.120(f) or 1926.65(f).

00575.4 Protective Clothing, Equipment and Instrumentation

Subcontractor agrees to furnish special protective clothing, respiratory protective equipment, and monitoring instrumentation as required by Applicable Laws, the project's safety-related plans and programs, and Purchaser's and Owner's rules and regulations. Subcontractor shall ensure that personnel performing Work at the jobsite properly use the clothing, equipment, and instrumentation. Subcontractor

shall furnish and maintain all safety equipment, including but not limited to, barriers, signs, warning lights, and guards necessary for adequate protection of persons and property.

00575.5 Safety and Health Representative

The Subcontractor shall identify a qualified person to be its representative for Environmental, Safety, Health & Security matters and make this person available as needed and requested by the Purchaser. The representative must have authority to correct unsafe conditions and to stop Work in the area of an unsafe condition. In addition, the representative shall routinely visit the jobsite.

00575.6 Safety and Health Goal

Subcontractor shall endeavor to attain the project's safety goal of zero injuries. Subcontractor shall maintain accurate accident and injury reports and shall furnish Purchaser a monthly summary of injuries and man-hours lost due to injuries by the third of each month. Subcontractor accident rates must be calculated monthly in accordance with the Bureau of Labor Statistics incident rate, frequency rate, and days away from work rate methods. If Subcontractor or Sub-subcontractor accident rates exceed the project's safety goal, Subcontractor shall take immediate corrective action, which may include, but is not limited to:

(a) submittal of a written corrective action plan to Purchaser by Subcontractor;

(b) additions or modifications to Subcontractor's Safety, Health and Accident Prevention Program;

(c) removal from the jobsite of any Subcontractor or Sub-subcontractor personnel not implementing or following the necessary safety and health measures; and

(d) increasing the amount of Subcontractor safety and health training.

00575.7 Drug Prevention Program

As part of the Work, Subcontractor shall assist Purchaser in administering the project requirements for a drug detection and prevention program. Subcontractor agrees that all costs for drug testing and alcohol testing are included in the Subcontract price. Subcontractor must provide evidence to Purchaser that all personnel assigned to the Work at the jobsite have passed the drug test within three calendar days of completion of the test. The drug detection and prevention program will include, but will not be limited to, the following: (a) a pre-jobsite assignment test; and (b) post-jobsite assignment tests, such as reasonable suspicion tests, post accident tests, and unannounced random drug tests of ten percent of the workforce on a monthly basis.

00575.8 Fall Protection

The OSHA Fall Protection Standard 29 CFR 1926 Subpart M shall be strictly adhered to by the Subcontractor. Fall protection is required for all of Subcontractor's Work operations one hundred percent of the time, whether climbing, traveling, or working. NO WORK OPERATION is exempt from the six (6) foot fall protection requirement.

Prior to starting work operations requiring fall protection, Subcontractor shall submit to Purchaser a fall protection plan. The fall protection plan shall include, but not be limited to, the following:

Name of qualified person in charge of operation.

Description of work operation.

List of fall exposures.

Description of fall protection methods used to eliminate fall exposures.

Training and enforcement methods used to ensure employee compliance with the plan.

Fall protection body harnesses, lanyards, and lifelines shall be used in accordance with OSHA Standard 1926 Subpart 502D, with the following exceptions:

Full body harnesses shall be used in lieu of safety belts.

Only lanyards with shock absorbers and locking type snap hooks shall be used.

At least two lanyards shall be used to provide one hundred percent fall protection when moving around obstructions, connection points, or other similar items.

Fall protection guardrail systems shall comply with OSHA Standard 1926 Subpart 502(b) except manila, plastic, or synthetic rope shall not be used as guardrails.

00575.9 Confined Spaces

All employees entering confined spaces and all attendants for such entries including supervisors shall receive confined space entry training and emergency rescue training at a minimum of once per year.

00575.10 Sub-subcontractor Safety Prequalification

Prior to any Sub-subcontractor performing Work on the Jobsite the Sub-subcontractor must obtain a Sub-subcontractor safety prequalification from Purchaser. In order to obtain the safety prequalification, Subcontractor or its Sub-subcontractor shall submit to Purchaser evidence that the Sub-subcontract has an Experience Modification Rating or equivalent rating of 1.0 or less and that incident rates (Recordable Incident Rate, Loss Time Incident Rate, and Days Away/Restricted or Job Transfer rate) are below the national average during the last three years. In addition, Subcontractor or Sub-subcontractor must submit sufficient information to allow Purchaser to evaluate any Occupational Safety and Health Administration (OSHA) violations received by Sub-subcontractor within the last three years and any other documentation Purchaser may reasonably require. Purchaser's safety manager will review the submission and provide a safety prequalification if Purchaser, in its sole discretion, determines the Sub-subcontractor meets Purchaser's safety requirements. Subcontractor or its Sub-subcontractor must submit the requirements prior to Sub-subcontractor first mobilizing to the Jobsite.

00672 - General Conditions Attachments

00672.1 Waiver and Release of Lien Rights

AFFIDAVIT AND PARTIAL WAIVER OF CLAIMS AND LIENS AND RELEASE OF RIGHTS FOR SUBCONTRACTORS

The undersigned, who is the _____(designate title) of _____which is the _____ (designate whether subcontractor, supplier or otherwise) for the _____ (designate the type of work, supplies or services rendered) on the improvements constructed on the premises hereafter identified, declares that his contract with _____ (General Contractor) is in the total amount of $_____ , which includes extras and all change orders to the date hereof.

The undersigned further states that as of _____ (date) the total value of work completed and material stored is $_____. Of this amount $_____ has been received (the receipt and sufficiency of which is hereby acknowledged by the undersigned including $_____ in payment of Payment Application or Invoice Number _____. A total of $_____ is being held as retainage.

In consideration of the amounts and sums received, the undersigned does hereby waive and release to the **City of Memphis (Owner)** and to _____ (General Contractor) any and all claims and liens and rights to liens upon the premises described below and upon improvements now thereon, and upon the monies or other considerations (due as of the date of the aforesaid payment application or invoices from the **City of Memphis (Owner)** or _____ (General Contractor) or from any other person, firm or corporation), said claims and liens and rights to liens being on account of labor, services, materials, fixtures or apparatus heretofore furnished by or at the request of the undersigned. The premises as to which said claims and liens and rights to liens are hereby released are identified as follows:

Project Name:
Address of Project:
City:_____ County: Shelby_____ State: TN Zip Code: _____

The undersigned further represents and warrants that he is duly authorized and empowered to sign and execute this waiver on his own behalf and on behalf of the company or business for which he is signing; that he has properly performed all work and furnished all the materials of the specified quality per plans and specifications and in a good and workmanlike manner through the date of said payment application or invoice; that he has paid for all the labor, materials, equipment, and services that he has used or supplied to the above premises through the date of said payment application or invoice; that he has no other outstanding and unpaid payment applications, invoices, retentions, holdbacks, chargebacks or unbilled work or materials against _____ (General Contractor) as of the date of the aforementioned payment application; and that any materials which have been supplied or incorporated into the above premises were either taken from his fully-paid or open stock or were fully paid for and supplied as stated on the payment application or invoice.

The undersigned further agrees to reimburse and does hold harmless and fully indemnify the **City of Memphis (Owner)** and _____ (General Contractor) for any losses or expenses should any such claims, lien or right to a lien be asserted (by the undersigned or by any laborer, materialman or subcontractor of the undersigned), including, without implied limitation, attorneys' fees incurred in the defense thereof.

The undersigned further accepts and acknowledges the receipt of the aforesaid sums in full accord and satisfaction for the aforementioned claims with full knowledge that the contractors, **City of Memphis (Owner)** and _____ (General Contractor), their successors and assigns, are relying thereon; and furthermore, the undersigned agrees to perform, now and in the future, each and every covenant and provision of this written contract or supplier's agreement (as the case may be) as modified or changed in writing with _____ (General Contractor) or any subcontractor of _____ (General Contractor) hereby acknowledging that said contract or supplier's agreement is now in full force and effect.

In addition, for and in consideration of the amounts and sums received, the undersigned hereby waives, releases and relinquishes any and all claims, rights or causes of action whatsoever arising out of or in the course of the work performed on the above-mentioned project, contract or event transpiring prior to the date hereof, excepting the right to receive payment for work performed and properly completed and retainage, if any, after the date of the above-mentioned payment application or invoices.

Signed and delivered the _____ day of _____, 20____.
Company_____

By:_____
(Printed Name)

_____
(Signature)

Title:_____

Before me, the undersigned Notary Public in and for the said County and State, personally appeared _____, and acknowledged execution of the foregoing affidavit as his voluntary act and deed and further stated that the facts recited are true of his personal knowledge.

My Commission Expires:_____

_____
Notary Public
Residence

County/State:_____

00672.2 Final Waiver and Release of Lien Rights

AFFIDAVIT AND FINAL WAIVER OF CLAIMS AND LIENS AND RELEASE OF RIGHTS FOR SUBCONTRACTORS

The undersigned, who is the _____(designate title) of _____which is the _____ (designate whether subcontractor, supplier or otherwise) for the _____ (designate the type of work, supplies or services rendered) on the improvements constructed on the premises hereafter identified, declares that his contract with _____ (General Contractor) is in the total amount of $_____ , which includes extras and all change orders to the date hereof.

The undersigned further states that as of _____ (date) all work on said project has been performed and completed in accordance with the plans and specifications for the project, and said work has been accomplished in accordance with the terms and conditions of his subcontract and those documents which, by reference, are a part of said subcontract. The total value of work completed and material stored is $_____. Of this amount $_____ has been received (the receipt and sufficiency of which is hereby acknowledged by the undersigned including $_____ in payment of Payment Application or Invoice Number _____. A total of $_____ is being held as retainage.

In consideration of the amounts and sums received, the undersigned does hereby waive and release to the **City of Memphis (Owner)** and to _____ (General Contractor) any and all claims and liens and rights to liens upon the premises described below and upon improvements now thereon, and upon the monies or other considerations (due as of the date of the aforesaid payment application or invoices from the **City of Memphis (Owner)** or _____ (General Contractor) or from any other person, firm or corporation), said claims and liens and rights to liens being on account of labor, services, materials, fixtures or apparatus heretofore furnished by or at the request of the undersigned. The premises as to which said claims and liens and rights to liens are hereby released are identified as follows:

Project Name:
Address of Project:
City:_____ County: Shelby_____ State: TN_____ Zip Code: _____

The undersigned further represents and warrants that he is duly authorized and empowered to sign and execute this waiver on his own behalf and on behalf of the company or business for which he is signing; that he has properly performed all work and furnished all the materials of the specified quality per plans and specifications and in a good and workmanlike manner as required by the contract; that he has paid for all the labor, materials, equipment, and services that he has used or supplied to the above premises as required by the contract; that he has no other outstanding and unpaid payment applications, invoices, retentions, holdbacks, chargebacks or unbilled work or materials against _____ (General Contractor); and that any materials which have been supplied or incorporated into the above premises were either taken from his fully-paid or open stock or were fully paid for and supplied as stated on the payment application or invoice.

The undersigned further agrees to reimburse and does hold harmless and fully indemnify the **City of Memphis (Owner)** and _____ (General Contractor) for any losses or expenses should any such claims, lien or right to a lien be asserted (by the undersigned or by any laborer, materialman or subcontractor of the undersigned), including, without implied limitation, attorneys' fees incurred in the defense thereof.

The undersigned further accepts and acknowledges the receipt of the aforesaid sums in full accord and satisfaction for the aforementioned claims with full knowledge that the contractors, **City of Memphis (Owner)** and _____ (General Contractor), their successors and assigns, are relying

thereon; and furthermore, the undersigned agrees to perform, now and in the future, each and every covenant and provision of this written contract or supplier's agreement (as the case may be) as modified or changed in writing with _____ (General Contractor) or any subcontractor of _____ (General Contractor) hereby acknowledging that said contract or supplier's agreement is now in full force and effect.

In addition, for and in consideration of the amounts and sums received, the undersigned hereby waives, releases and relinquishes any and all claims, rights or causes of action whatsoever arising out of or in the course of the work performed on the above-mentioned project, contract or event transpiring prior to the date hereof, except retainage, if any, after the date of the above-mentioned payment application or invoices.

Signed and delivered the _____ day of _____, 20____.
Company_____

By:_____
(Printed Name)

_____
(Signature)

Title:_____

Before me, the undersigned Notary Public in and for the said County and State, personally appeared _____, and acknowledged execution of the foregoing affidavit as his voluntary act and deed and further stated that the facts recited are true of his personal knowledge.

My Commission Expires:_____

_____
Notary Public
Residence County/State:_____

00672.3 Certificate of Nondiscrimination (1 page)

As Bidder, Contractor, or Subcontractor on Purchaser's Contract,

SARP10 Program 71.0406 Lick Creek Interceptor CIPP Project

The undersigned states that it does not discriminate against any subcontractor, employee, or applicant for employment on the grounds of race, color ,national origin or sex and, if awarded a contract for this project, agrees in performance of work:

1. Not to discriminate against any subcontractor, employee, or applicant for employment on the grounds of race, color, national origin or sex;

2. To maintain payrolls of laborers and mechanics employed on this contract until seven (7) years after final release and final payment by the City;

3. To require a similar certificate to be executed by each subcontractor at the time a subcontract is executed under the contract with the requirement that such subcontractor agrees to require a similar certificate of requirement on any lower tiers of subcontracts.

4. To conform to federal law, state statutes, executive orders, and local ordinances identified and listed under Non-discrimination, Section 00270.9.

_____
Subcontractor's Name

_____
Date

_____
Signature

_____
Printed or Typed Name and Title

<u>THIS FORM MUST BE SUBMITTED WITH THE BID OR THE BID MAY BE CONSIDERED NONCONFORMING</u>

00672.4 Equal Business Opportunity Program

This form must be submitted with Bidder's bid. Failure to execute and submit this document with Bidder's bid may cause the Bid to be rejected as non-conforming. In addition, each Sub-Subcontractor must execute the form.

This Subcontract will be subject to the requirements of the City of Memphis Ordinance #5384 which establishes the Equal Business Opportunity ("EBO") Program. It is up to the Respondent to ensure that all requirements of this ordinance are met. The Ordinance may be accessed on the City's website at www.memphistn.gov under "Office of Contract Compliance". The intent of the EBO Program is to increase the participation of locally owned minority and women owned business enterprises ("M/WBE"). Toward achieving this objective, the DBE participation goal for this solicitation is 15%. The percentage of DBE participation is defined as the dollar value of subcontracts awarded to certified (as identified on the City of Memphis EBO list) minority and/or women business enterprises divided by the total proposed base bid amount.

Additionally, in accordance with federal executive Order 11625 and 12138, the local government must make a good faith effort to include participation from Disadvantage Business enterprises (DBE) in sub-agreement awards. The SRF Fair Share Goals for this project is minimum of **2.6%** s MBE and minimum of **2.6%** WBE (as identified as on the Tennessee Uniform Certification Program list). **Please note Subcontractor must meet both percentages independently to satisfy the requirements.**

Executive Order 11625 and SRF Fair Share Goals:

MBE minimum	**2.6%**
WBE minimum	**2.6%**

SARP10 DBE Participation Goal:

DBE minimum	**15%**

Participation Plan

The Participation Plan must include: (1) level and dollar amount of participation your firm anticipates to achieve in the performance of contract resulting from this RFB; (2) the type of work to be performed by the M/WBE participation; and (3) the names of the M/WBE and/or DBE firm(s) the Respondent plans to utilize in the performance of the contract resulting from this RFB.

Eligible M/WBE and/or DBE Firms

To qualify as a SARP10 DBE firm, per the requirements of City of Memphis Ordinance #5384, a firm must be included on the City's list of certified M/WBE firms. All contractors identified as an SRF Fair Share M/WBE firm must be on the Tennessee Uniform Certification Program (TNUCP) List at the time of the bid opening.

A list of the City's eligible M/WBE firms and DBE firms may be requested from Purchaser as a guide only. If a Bidder desires to utilize an M/WBE or DBE firm not included on the list, it is the Bidder's responsibility to confirm that the desired firm is certified by the City of Memphis. Such confirmation must be obtained from the City's Contract Compliance Office, in writing, before the bid/response due date. Requests for verification must be submitted to the City's Contract Compliance Office listed below:

Mary Bright, Esq.
City of Memphis, Contract Compliance Office
125 North Main Street, Suite 546
Memphis, TN 38103
Phone: (901) 576-6210 - Fax: (901) 576-6560
Email: mary.bright@memphistn.gov

MINORITY/WOMEN BUSINESS ENTERPRISE COMPLIANCE FORM (1 page)

<u>SUBCONTRACT TITLE:</u> 71.0406 Lick Creek Interceptor CIPP Project

Project M/WBE Goal: DBE SRF Fair Share Goals:
MBE minimum **2.6%**
WBE minimum **2.6%**
(Vendors from TNUCP DBE list, other State or Federal DBE list, or the City of Memphis EBO list)

SARP10 DBE Participation Goal:
MBE and/or WBE minimum **15%**
(Vendors from the City of Memphis EBO List only)

The following sections must be completed by Bidder. A certified Sub-subcontractor or supplier is defined as a firm from the list of certified firms provided with this specification.

_____
Bidder's Name

Section A - If the Bidder is a certified firm, so indicate here with a check mark (check all that apply if on both lists)

_____ MBE _____ WBE _____ DBE

Section B - Identify below those certified firms that will be employed as Sub-subcontractors or suppliers on this Project. By submitting this Bid, the Bidder commits to the use of the firms listed below.

$ = Show the dollar value of the subcontract to be awarded to this firm

% = Show the percentage this subcontract is of your base Bid

M/WBE = Show by inserting an M or W whether the subcontractor is an MBE or WBE

$	%	M/WBE	DBE	CERTIFIED SUBCONTR. NAME, ADDRESS, TEL. #
_____	_____	_____	____	_____
_____	_____	_____	____	_____
_____	_____	_____	____	_____
_____	_____	_____	____	_____
_____	_____	_____	____	_____
_____	_____	_____	____	_____

$_____ %_____ *= Total MBE*

$_____ %_____ *= Total WBE*

$_____ %_____ *= Total DBE*

<u>THIS FORM MUST BE SUBMITTED WITH THE BID OR THE BID MAY BE CONSIDERED NON-CONFORMING.</u>

00672.5 Report of Disadvantaged Business Enterprise Participation Form (1 page)

PROJECT NUMBER:_____

SUBCONTRACTOR'S REPORT OF DISADVANTAGED BUSINESS ENTERPRISE PARTICIPATION

Project Name: _____ Month of _____ , 201 _____
General Contractor: _____
Contact Person: _____ Telephone: _____
Address: _____ Email: _____
Amount of Subcontract: $ _____ MBE %: _____ WBE %: _____

DBE Information: Circle either MBE or WBE and Complete Form.

MBE/WBE Firm Name: _____ Contact Person: _____
Date of Award: _____ Contract Value: $ _____
Completed-to-Date: $ _____ Paid-to-Date: $ _____
Work Description: _____ Telephone #: _____
Comments: _____ Email: _____

MBE/WBE Firm Name: _____ Contact Person: _____
Date of Award: _____ Contract Value: $ _____
Completed-to-Date: $ _____ Paid-to-Date: $ _____
Work Description: _____ Telephone #: _____
Comments: _____ Email: _____

MBE/WBE Firm Name: _____ Contact Person: _____
Date of Award: _____ Contract Value: $ _____
Completed-to-Date: $ _____ Paid-to-Date: $ _____
Work Description: _____ Telephone #: _____
Comments: _____ Email: _____

MBE/WBE Firm Name: _____ Contact Person: _____
Date of Award: _____ Contract Value: $ _____
Completed-to-Date: $ _____ Paid-to-Date: $ _____
Work Description: _____ Telephone #: _____
Comments: _____ Email: _____

Attach additional pages as required.

General Contractor's Signature: _____ Date: _____

00672.6 State Revolving Fund (SRF) Front-Ends (56 pages)

This Project 179821.71.0406 must maintain SRF compliance for the SARP10 Program, the SRF "Front-Ends" consisting of various forms and documents are attached herein. Furthermore, Davis Bacon is referenced within these SRF Front-Ends, and applies to the scope of Work. As a special note, the Bidder's Requirements on page 13 of 56 of the SRF Front-Ends, outlines Pre-Bid Requirements where all bidders must send certified mail and return receipts to a minimum of 10 certified DBE subcontractors, soliciting their service.

The following SRF Forms are to be submitted with your Bid and will be attached to the Subcontract:
(Please also include a signed form from each Sub-subcontractor as applicable refer to Table 00370.8 Schedule of Submittals)

1. Certification Regarding Debarment (page 2 of 56)
2. Certification Regarding Equal Employment Opportunity (page 3 of 56)
3. EPA Form 6100-3 (page 21-22 of 56)
4. EPA Form 6100-4 (page 23-24 of 56)

STATE REVOLVING FUND LOAN PROGRAM

Inserts for Specifications

Clean Water – Unsubsidized

Projects Funded with FY 2010 and After Funds

Subject	File Name
Certification Regarding Debarment	02_CertificationRegardingDebarment.pdf
Certification Regarding Equal Employment Opportunity	03_CertificationRegardingEqualEmploymentOps.pdf
Retainage – TCAs 66-34-104, 203,103	04_RetainageTCAs.pdf
Advertisement for Bids Example – DBE	05_AdvertisementForBidsExample_DBE.pdf
DBE-Guidance Document	06_DBE01_GuidanceDocument.pdf
DBE-Loan Recipient's Requirements	06_DBE02_LoanRecip_Requirements.pdf
DBE-Loan Recipient's Good Faith Effort Letter	06_DBE03_LoanRecip_GoodFaithEffortLtr.pdf
DBE-Loan Recipient's Certification Summary Form	06_DBE04_LoanRecip_CertificationSummaryForm.pdf
DBE-Bidder's Requirements	06_DBE05_BidderRequirements.pdf
DBE Form 6100-2 Contractor Receipt Letter	06_DBE06_Form6100_2_ContractorReceiptLtr.pdf
DBE Form 6100-2 Subcontractor Participation	06_DBE07_Form6100_2_SubcontractorParticipation.pdf
DBE Form 6100-3 Subcontractor Performance	06_DBE08_Form6100_3_SubcontractorPerformance.pdf
DBE Form 6100-4 Subcontractor Utilization	06_DBE09_Form6100_4_SubcontractorUtilization.pdf
DBE-Certified List	06_DBE10_CertifiedList.pdf
Davis Bacon Poster - English	08_DavisBacon_Poster_English.pdf
Davis Bacon Poster - Spanish	08_DavisBaconsigninSpanish.pdf
Project Wage Sheet - HUD-4720	08_ProjectWageSheet_HUD-4720.pdf
Wage Rate - Bidder's Guidance to Davis Bacon	08_WageRates_BidderGuidanceToDavisBacon_20110215.pdf
Wage Rate – Loan Recipient's Guidance to DavisBacon	08_WageRates_LoanRecipGuidanceToDavisBacon_20110215.pdf
Tracking and Reporting – Loan Recipient's and Contractor's Guidance	09_TrackingAndReporting_LoanRecipAndBidderGuidance_FY2010andAfter.pdf
Storm Water General Permit NOI	11_StormWater_NOI.pdf
Storm Water General Permit NOT	11_StormWater_NOT.pdf
Project Sign Detail - Clean Water – Unsubsidized	14_CWSRF_ProjectSign_Color_Unsubsidized.pdf
Project Sign Detail - Clean Water – Unsubsidized	14_CWSRF_ProjectSign_NoColor_Unsubsidized.pdf
Bid Package Submittal Requirements	15_BidPackageSubmittalRequirements.pdf
Letter In Lieu of a Site Certificate	16_LetterInLieuofaSiteCertificate.pdf
Site Certificate	16_SiteCertificate.pdf

U.S. Environmental Protection Agency

CERTIFICATION REGARDING DEBARMENT, SUSPENSION AND OTHER RESPONSIBILTITY MATTERS

The prospective participant certifies to the best of its knowledge and belief that it and its principals:

(a) Are not presently debarred, suspended, proposed for debarment, declared ineligible, or voluntarily excluded from covered transactions by any Federal department or agency;

(b) Have not within a three year period preceding this proposal been convicted of or had a civil judgement rendered against them for commission of fraud or a criminal offense in connection with obtaining, attempting to obtain, or performing a public (Federal, State, or local) transaction or contract under a public transaction; violation of Federal or State antitrust statues or commission of embezzlement, theft, forgery, bribery, falsification or destruction of records, making false statements, or receiving stolen property;

(c) Are not presently indicted for or otherwise criminally or civilly charged by a government entity (Federal, State, or local) with commission of any of the offenses enumerated in paragraph (b) of this certification; and

(d) Have not within a three-year period preceding this application/proposal had one or more public transactions (Federal, State, or local) terminated for cause or default.

I understand that a false statement on this certification may be grounds for rejection of this proposal or termination of the award. In addition, under 18 USC Sec. 1001, a false statement may result in a fine of up to $10,000 or imprisonment for up to 5 years, or both.

_____

Typed Name & Title of Authorized Representative

_____

Signature of Authorized Representative Date

____ I am unable to certify to the above statements. My explanation is attached.

CERTIFICATION BY PROPOSED PRIME OR SUBCONTRACTOR REGARDING EQUAL EMPLOYMENT OPPORTUNITY

_____

Name of Prime Contractor **Project Number**

INSTRUCTIONS

This certification is required pursuant to Executive Order 11246, Part II, Section 203 (b), 30 F.R. 12319-25). Any bidder or prospective contractor, or any of their proposed subcontractors, shall state as an initial part of the bid or negotiations of the contract whether it has participated in any previous contract or subcontract subject to the equal opportunity clause; and, if so, whether it has filed all compliance reports due under applicable instructions.

Where the certification indicated that the prime or subcontractor has not filed a compliance report due under applicable instruction, such contractor shall be required to submit a compliance report.

CONTRACTOR'S CERTIFICATION

Contractor's Name: _____

Address: _____

_____

_____

1. Bidder has participated in a previous contract or subcontract subject to the Equal Opportunity Clause. Yes ☐ No ☐

2. Compliance Reports were required to be filed in connection with such contract or subcontract. Yes ☐ No ☐

   If yes, state what reports were filed and with what agency.

   _____

3. Bidder has filed all compliance reports due under applicable instructions, including SF-100. Yes ☐ No ☐

4. If answer to Item 3 is NO, please explain in detail on reverse side of this certification.

Certification - The information above is true and complete to the best of my knowledge and belief. (A willfully false statement is punishable by law-U.S. Code, Title 18, Section 1001.)

_____

Name and title of signer (Please type)

_____ _____

Signature **Date**

EPA-R4-0017 (5-73)

TENNESSEE CODE ANNOTATED
© 2013 by The State of Tennessee
All rights reserved

*** Current through the 2012 Regular Session ***

Title 66 Property
Chapter 34 Prompt Pay Act
Part 1 General Provisions

Tenn. Code Ann. § 66-34-103 (2012)

66-34-103. Withholding of retainage -- Violations -- Penalties.

(a) All construction contracts on any project in this state, both public and private, may provide for the withholding of retainage; provided, however, that the retainage amount may not exceed five percent (5%) of the amount of the contract.

(b) The owner, whether public or private, shall release and pay all retainages for work completed pursuant to the terms of any contract to the prime contractor within ninety (90) days after completion of the work or within ninety (90) days after substantial completion of the project for work completed, whichever occurs first. As used in this subsection (b), work completed shall be construed to mean the completion of the scope of the work and all terms and conditions covered by the contract under which the retainage is being held. The prime contractor shall pay all retainages due any subcontractor within ten (10) days after receipt of the retainages from the owner. Any subcontractor receiving the retainage from the prime contractor shall pay to any subsubcontractor or material supplier all retainages due the subsubcontractor or material supplier within ten (10) days after receipt of the retainages.

(c) Any default in the making of the payments shall be subject to those remedies provided in this part.

(d) In the event that an owner or prime contractor withholds retainage that is for the use and benefit of the prime contractor or its subcontractors pursuant to § 66-34-104(a) and (b), neither the prime contractor nor any of its subcontractors shall be required to deposit additional retained funds into an escrow account in accordance with § 66-34-104(a) and (b).

(e) (1) It is an offense for a person, firm or corporation to fail to comply with subsection (a) or (b) or § 66-34-104(a).

(2) (A) A violation of this subsection (e) is a Class A misdemeanor, subject to a fine only of three thousand dollars ($3,000).

(B) Each day a person, firm or corporation fails to comply with subsection (a) or (b) or § 66-34-104(a) is a separate violation of this subsection (e).

(C) Until the violation of this subsection (e) is remediated by compliance, the punishment for each violation shall be consecutive to all other such violations.

(3) In addition to the fine imposed pursuant to subdivisions (e)(2)(A) and (B), the court shall order restitution be made to the owner of the retained funds. In determining the appropriate amount of restitution, the formula stated in § 40-35-304 shall be used.

HISTORY: Acts 2007, ch. 201, § 3; 2008, ch. 804, § 3; 2012, ch. 609, § 1.

TENNESSEE CODE ANNOTATED
© 2013 by The State of Tennessee
All rights reserved

*** Current through the 2012 Regular Session ***

Title 66 Property
Chapter 34 Prompt Pay Act
Part 1 General Provisions

Tenn. Code Ann. § 66-34-104 (2012)

66-34-104. Retention of portion of contract price in escrow -- Applicability -- Mandatory compliance.

(a) Whenever, in any contract for the improvement of real property, a certain amount or percentage of the contract price is retained, that retained amount shall be deposited in a separate, interest-bearing, escrow account with a third party which must be established upon the withholding of any retainage.

(b) As of the time of the withholding of the retained funds, the funds shall become the sole and separate property of the prime contractor or remote contractor to whom they are owed, subject to the rights of the person withholding the retainage in the event the prime contractor or remote contractor otherwise entitled to the funds defaults on or does not complete its contract.

(c) In the event that the party withholding the retained funds fails to deposit the funds into an escrow account as provided herein, such party shall be responsible for paying the owner of the retained funds an additional three hundred dollar ($300) penalty per day for each and every day that such retained funds are not deposited into such escrow account.

(d) The party with the responsibility for depositing the retained amount in a separate, interest-bearing, escrow account with a third party shall have the affirmative duty to provide written notice that it has complied with the requirements of this section to any prime contractor upon withholding the amount of retained funds from each and every application for payment, including:

(1) Identification of the name of the financial institution with whom the escrow account has been established;

(2) Account number; and

(3) Amount of retained funds that are deposited in the escrow account with the third party.

(e) Upon satisfactory completion of the contract, to be evidenced by a written release by the owner or prime contractor owing the retainage, all funds accumulated in the escrow account together with all interest on the account shall be paid immediately to the prime contractor or remote contractor to whom the funds and interest are owed.

(f) In the event the owner or prime contractor, as applicable, fails or refuses to execute the release provided for in subsection (c), then the prime contractor or remote contractor, as applicable, may seek any remedy in a court of proper jurisdiction and the person holding the fund as escrow agent shall bear no liability for the nonpayment of the fund to the prime contractor or remote contractor; provided, however, that all claims, demands, disputes, controversies, and differences that may arise between the owner, prime contractor or prime contractors, and remote contractor or remote contractors regarding the funds may be, upon written agreement of all parties concerned, settled by arbitration conducted pursuant to the Tennessee Uniform Arbitration Act, compiled in title 4, chapter 5, part 3, or the Federal

Arbitration Act, 9 U.S.C. § 1, et seq., as may be applicable.

(g) In contracts to which the state or any department, board or agency of the state, including the University of Tennessee, is a party, interest shall be paid on the retained amounts at the same rate interest is paid on the funds of local governments participating in the local government investment pool established pursuant to § 9-4-704, for the contract period.

(h) The provisions of this section shall be applicable to the state, any department, board or agency of the state, including the University of Tennessee, and all counties and municipalities and all departments, boards or agencies of the counties and municipalities, including all school and education boards, and any other subdivision of the state.

(i) This section shall be applicable to all prime contracts and all subcontracts thereunder for the improvement of real property when the contract amount of such prime contract is five hundred thousand dollars ($500,000) or greater, notwithstanding the amount of such subcontracts.

(j) Compliance with this section shall be mandatory, and may not be waived by contract.

(k) Failure to deposit the retained funds into an escrow account as provided herein, within seven (7) days' receipt of written notice regarding such failure, is a Class A misdemeanor.

HISTORY: Acts 1975, ch. 345, §§ 1-4; T.C.A., §§ 64-1148 -- 64-1151; Acts 1985, ch. 340, §§ 1, 2; 1986, ch. 551, § 9; 2007, ch. 189, § 43; 2007, ch. 201, §§ 1, 2; T.C.A. § 66-11-144; Acts 2008, ch. 804, §§ 1, 2; 2010, ch. 875, §§ 1, 2; 2012, ch. 609, §§ 2-5.

TENNESSEE CODE ANNOTATED
© 2013 by The State of Tennessee
All rights reserved

*** Current through the 2012 Regular Session ***

Title 66 Property
Chapter 34 Prompt Pay Act
Part 2 Owner/Contractor Payment

Tenn. Code Ann. § 66-34-203 (2012)

66-34-203. Withholding of payment or retainage by owner.

Nothing in this chapter shall prevent the owner from reasonably withholding payment or a portion of a payment to the contractor; provided, that such withholding is in accordance with the provisions of the written contract between the owner and the contractor. The owner may also withhold a reasonable amount of retainage as specified in the written contract between the owner and the contractor; provided, however, that the retainage amount may not exceed five percent (5%) of the amount of the contract.

HISTORY: Acts 1991, ch. 45, § 1; 2007, ch. 201, § 4.

ADVERTISEMENT FOR BIDS EXAMPLE – DBE

The {City/Town/County/Utility District/Authority} will receive separate sealed BIDS for the construction of a {water or wastewater} project at {location to deliver bid proposal} until {closing time}, local time, on {date}, and, then, at said time, publicly open and read the BIDS aloud.

The work to be bid on is as follows: {Description of work to be performed here.}

The allotted time for construction is {# of days for work to be performed} calendar days.

The information for Bidders; Bid Form; Form of Agreement; Drawings; Specifications information; Bid Bond, Performance Bond, and Payment Bond information; and other contract documents may be examined at the addresses below:

{Please type address of consulting engineer's office}

{Please type address of City/Town/Utility District/Authority}

Ms. Marilyn Robinson, Executive Director
Nashville Minority Business Office
1919 Charlotte Avenue, Suite 310
Nashville, TN 37203
(615) 255-0432

Copies of the CONTRACT DOCUMENTS may be obtained at the {name of office to pick up contract documents} Office, located at {address of office}, upon payment of $ {Amount} for each set.

Any BIDDER, upon returning the CONTRACT DOCUMENTS within {number of days} days after BID opening and in good condition, will be refunded {his/her payment or $ amount} and any non-bidder will be refunded $ {Amount}.

No bid may be withdrawn within (#) days after the scheduled time for receipt of bids.

DAVIS-BACON ACT REQUIREMENTS

This project is being funded by a State Revolving Fund loan from FY 2010 (or later) EPA Capitalization Grant Funds. The loan recipient must be in compliance with all applicable Davis-Bacon Act requirements.

DISADVANTAGED BUSINESS ENTERPRISES (DBE) REQUIREMENTS

Any contract or contracts awarded by the Owner through this invitation for bids will be funded by a State Revolving Fund (SRF) loan from the State of Tennessee. State and Federal funds will be involved in this project, and, as a result, Bidders must comply with the SRF Loan Program's Disadvantaged Business Enterprises (DBE) requirements including contacting a minimum of 10 qualified DBE sub-contractors, professional service providers, vendors, and/or suppliers by certified mail to solicit bids. The apparent successful Bidder must submit to the Owner copies of the certified letters and return receipts prior to contract award. Neither the State of Tennessee nor any of its departments, agencies, or employees is or will be a party to this Invitation for Bids or any resulting contract(s) awarded by the Owner.

SPECIAL NOTICE TO DISADVANTAGED BUSINESS ENTERPRISES (DBE) FIRMS

All qualified Disadvantaged Business Enterprises (DBE) firms desiring to bid as a General Contractor, sub-contractor, professional service provider, supplier, or equipment vendor are encouraged to contact Ms. Marilyn Robinson at the Nashville Minority Business Center office listed above to review bidding/contract documents. Qualified Disadvantaged Business Enterprises (DBE) firms may also contact {Name of the Engineer, office address, and phone number}, in order to obtain a list of prospective bidding General Contractors or to obtain copies of bidding/contract documents.

Disadvantaged Business Enterprise (DBE) Requirements
for
State Revolving Fund Loans Awarded after May 27, 2008

GUIDANCE DOCUMENT

Items included in the Guidance Document:

- **General Contract Administration Provisions Table**
- **Six Good Faith Efforts, Purpose and Definitions Table**
- **List of DBE Forms for Loans Awarded After May 27, 2008**

GENERAL CONTRACT ADMINISTRATION PROVISIONS—www.epa.gov			
Requirement	**Circumstance**	**Responsible Party:**	**Submitted To:**
A **Loan Recipient** must be notified in writing by its **Prime Contractor** prior to any termination of a **DBE Subcontractor** for convenience by the **Prime Contractor**.	Termination of a **DBE Subcontractor** for convenience by the **Prime Contractor**	**Prime Contractor**	**Loan Recipient**
A **Loan Recipient** must require its **Prime Contractor** to pay its **Subcontractor** for satisfactory performance no more than 30 days from the **Prime Contractor's** receipt of payment from the **Loan Recipient**.	**DBE Subcontractor's** satisfactory performance	**Loan Recipient** **Prime Contractor**	**DBE Subcontractor**
If a **DBE Subcontractor** fails to complete work under the subcontract for any reason, the **Loan Recipient** must require the **Prime Contractor** to employ the **Six Good Faith Efforts** (see Table below) if soliciting a replacement **Subcontractor**.	**DBE Subcontractor** fails to complete work under the subcontract for any reason and will be replaced	**Loan Recipient** **Prime Contractor**	**SRF Loan Program**
A **Loan Recipient** must require its **Prime Contractor** to employ the **Six Good Faith Efforts** (see Table below) even if the **Prime Contractor** has achieved its fair share objectives.	Employment of the **Six Good Faith Efforts**	**Loan Recipient** **Prime Contractor**	**SRF Loan Program**
Inclusion, completion, and/or transmittal of required **DBE Forms** as instructed below: **Loan Recipient Requirements** **Bidder Requirements** **DBE Participation/Certification Summary** **Advertisement for Bids and Publisher's Affidavit** 10 Certified Letters and Return Receipts to certified **DBEs** **Good Faith Letter** **Prime Contractor's Notice Letter** for EPA Form 6100-2 **EPA Form 6100-2** **EPA Form 6100-3** **EPA Form 6100-4**	---	**Loan Recipient** **Prime Contractor** **DBE Subcontractor**	See instructions below and on Forms

SIX GOOD FAITH EFFORTS—www.epa.gov	
PURPOSE	The Good Faith Efforts are required methods employed by all EPA financial assistance agreement recipients to ensure that all disadvantaged business enterprises (DBEs) have the opportunity to compete for procurements funded by EPA financial assistance dollars.
Definitions	
EFFORT 1	Ensure DBEs are made aware of contracting opportunities to the fullest extent practicable through outreach and recruitment activities. For Indian Tribal, State and Local and Government recipients, this will include placing DBEs on solicitation lists and soliciting them whenever they are potential sources.
EFFORT 2	Make information on forthcoming opportunities available to DBEs and arrange time frames for contracts and establish delivery schedules, where the requirements permit, in a way that encourages and facilitates participation by DBEs in the competitive process. This includes, whenever possible, posting solicitations for bids or proposals for a minimum of 30 calendar days before the bid or proposal closing date.
EFFORT 3	Consider in the contracting process whether firms competing for large contracts could subcontract with DBEs. For Indian Tribal, State and local Government recipients, this will include dividing total requirements when economically feasible into smaller tasks or quantities to permit maximum participation by DBEs in the competitive process.
EFFORT 4	Encourage contracting with a consortium of DBEs when a contract is too large for one of these firms to handle individually.
EFFORT 5	Use the services and assistance of the Small Business Administration (SBA) and the Minority Business Development Agency of the Department of Commerce.
EFFORT 6	If the **Prime Contractor** awards subcontracts, require the **Prime Contractor** to take the steps in the Good Faith Efforts 1 through 5 (above) and in the General Contract Administration Provisions (above).

DBE FORMS FOR SRF LOANS AWARDED AFTER MAY 27, 2008—www.epa.gov				
Form	**Requirement**	**Provided By:**	**Completed By:**	**Submitted To:**
List of certified **DBE** contractors, subcontractors, supplies vendors, equipment vendors, and service providers	Keep list with project files/information for duration of project	**SRF Loan Program**	---	---
Loan Recipient's Requirements regarding DBEs	Include this information sheet in the Information for Bidders section of bid documents	**SRF Loan Program**	---	To be included in the contract specifications book
Bidder's Requirements regarding DBEs	Include this information sheet in the Information for Bidders section of bid documents	**SRF Loan Program**	---	To be included in the contract specifications book
Loan Recipient's Certification and Summary of **DBE** Participation	To be completed and submitted with the Authority-to-Award/ Bid Package. The SRF Loan Program must be notified of any changes, additions, or deletions to the contract during construction.	**SRF Loan Program**	**Loan Recipient**	**SRF Loan Program**
Advertisement for Bids and **Publisher's Affidavit**	**DBE** solicitation information must be included in the actual advertisement for bids. A Publisher's Affidavit (signed, original, notarized certification of publication) denoting the actual published date of the advertisement will be submitted to the SRF Loan Program as part of the Authority-to-Award/Bid Package documents.	An example advertise-ment with appropriate **DBE** language is supplied to the Loan Recipient by the **SRF Loan Program**	**Loan Recipient**	A copy of the actual advertisement and a Publisher's Affidavit will be submitted to the **SRF Loan Program** as part of the Authority-to-Award/Bid Package documents
10 Certified Letters and **Return Receipts** to potential certified DBE subcontractors, supplies vendors, service providers, and/or equipment vendors	These certified letters and copies of the corresponding return mail receipts are submitted with the completed **Loan Recipient's DBE Participation and Certification Summary Form.**	**Prime Contractor and/or Loan Recipient**	**Loan Recipient**	SRF Loan Program as part of the Authority-to-Award/Bid Package documents
Good Faith Letter	If **no DBE** participation is obtained for the contract, the "Good Faith" letter must be written.	Form letter provided by the **SRF Loan Program**	**Loan Recipient**	**SRF Loan Program**

DBE FORMS FOR SRF LOANS AWARDED AFTER MAY 27, 2008—www.epa.gov				
Form	**Requirement**	**Provided By:**	**Completed By:**	**Submitted To:**
Prime Contractor's Notice Letter for EPA Form 6100-2	The **Prime Contractor** must submit the Notice Letter to verify that Form 6100-2 was supplied to all **DBE Subcontractors** participating in the contract.	**SRF Loan Program**	**Prime Contractor**	**Loan Recipient** for inclusion in the Authority-to-Award / Bid / Proposal package
EPA Form **6100-2**	**Loan Recipient** required to have **Prime Contractors** provide form to **DBE Subcontractors** This form gives a **DBE Subcontractor** the opportunity to describe the work the **DBE Subcontractor** received from the **Prime Contractor**, how much the **DBE Subcontractor** was paid, and any other concerns the **DBE Subcontractor** might have.	**Loan Recipient** **Prime Contractors**	**DBE Subcontractors**	**EPA DBE Coordinator** at the conclusion of **DBE Subcontractor** participation in the project (Address on Form)
EPA Form **6100-3**	**Loan Recipient** required to have **Prime Contractors** provide form to **DBE Subcontractors** This form captures an intended **Subcontractor's** description of work to be performed for the **Prime Contractor** and the price of the work submitted to the **Prime Contractor**.	**Loan Recipient**	**Prime Contractors** **DBE Subcontractors**	**Loan Recipient** for inclusion in the Authority-to-Award / Bid / Proposal package
EPA Form **6100-4**	**Loan Recipient** required to have **Prime Contractors** complete the form This form captures the **Prime Contractor's** intended use of an identified **DBE Subcontractor** and the estimated dollar amount of the subcontract.	**Loan Recipient**	**Prime Contractors**	**Loan Recipient** for inclusion in the Authority-to-Award / Bid / Proposal package

STATE REVOLVING FUND LOAN PROGRAM

Loan Recipient's Requirements for Solicitation and Documentation
of
Disadvantaged Business Enterprises (DBE) Participation
on State Revolving Fund (SRF) Projects

A goal-oriented system has been established to promote **Disadvantaged Business Enterprises (DBE)** participation by providing construction services, professional services, supplies, and/or equipment on SRF Loan-funded water and wastewater projects. It is the Loan Recipient's responsibility to ensure that Bidders make a good faith effort during the bidding phase to solicit for subcontractor participation by **DBE** subcontractors, service professionals, suppliers, and/or equipment vendors on all SRF-funded projects.

DEFINITIONS

DBE - Minority Business Enterprise (MBE): A qualified socially and economically disadvantaged minority-owned business certified by any State or Federal agency, such as the Tennessee Department of Transportation, U.S. EPA's Office of Small and Disadvantaged Business Utilization, or the U.S. Small Business Administration.

DBE - Women's Business Enterprise (WBE): A qualified independent business at least 51% owned by a woman or women and certified by any State or Federal agency such as the Tennessee Department of Transportation, U.S. EPA's Office of Small and Disadvantaged Business Utilization, or the U.S. Small Business Administration.

Fair-Share Goals: The MBE fair-share goal is 2.6% for construction and 5.2% for supplies, services, and equipment. The WBE fair share goal is 2.6% for construction and 5.2% for supplies, services, and equipment.

INSTRUCTIONS TO LOAN RECIPIENTS

Pre-Bid Requirements

Loan Recipients must include the SRF Loan Program's "Bidder's Requirements for Solicitation and Documentation of **DBE** Participation on SRF-Funded Projects" information sheet in the Information for Bidders section of bid documents. Loan Recipients must also ensure that Bidders take the following affirmative steps that constitute a good-faith effort to secure **DBE** participation:

- Include certified **DBEs** on solicitation lists whenever they are potential sources,
- Divide construction contracts into subcontracts, when economically feasible, to encourage maximum participation by **DBEs**,
- Establish delivery schedules, where requirements of the work permit, that encourage participation by **DBEs**,
- Use the services and assistance of the Office of Minority Business Enterprises of the U.S. Department of Commerce, or the U.S. EPA's Office of Small and Disadvantaged Business Utilization. For assistance or information, Bidders may be referred to:

Tennessee Department of Transportation
Small Business Development
505 Deaderick Street, Suite 1800
Nashville, TN 37243-0347
(615) 741-3681
http://www.tdot.state.tn.us/construction/DBE%20list/dbe_list.pdf

Mr. W. Clinton Smith, District Director
U.S. Small Business Administration
50 Vantage Way, Suite 201
Nashville, TN 37228
(615) 736-5881
http://pro-net.sba.gov/

Ms. Jeanette L. Brown, Director
U.S. Environmental Protection Agency
Office of Small and Disadvantaged Business Utilization
1200 Pennsylvania Avenue, N.W. (1230A)
Washington, D.C. 20460
(202) 564-4100 http://www.epa.gov/osdbu/

POST-BID REQUIREMENTS

Whether or not DBE participation was obtained, the Loan Recipient must complete the **"Loan Recipient's Certification and Summary"** form for every contract detailing whether or not **DBE** participation of subcontractors, professional service providers, suppliers, and/or equipment vendors was obtained. The **"Loan Recipient's Certification and Summary"** form must be submitted to the Administrative Section of the SRF Loan Program prior to the award of any construction contract(s) along with the newspaper **advertisement**, a **Publisher's Affidavit**, and **return receipts** and copies of the **certified letters** that were mailed to a minimum of 10 qualified **DBEs**.

STATE REVOLVING FUND LOAN PROGRAM

Loan Recipient's Requirements for Solicitation and Documentation
of
Disadvantaged Business Enterprises (DBE) Participation
on State Revolving Fund (SRF) Projects

If DBE participation was obtained, the **"Loan Recipient's Certification and Summary"** form must clearly indicate whether **DBE** participation was obtained from either a subcontractor, professional service provider, supplier, and/or equipment vendor participation; identify the **DBE** firm(s) to be used; and certify that the **DBE** firm(s) is a certified **DBE**. In addition to the **"Loan Recipient's Certification and Summary"** form, the Loan Recipient must include in the submittal to the SRF Loan Program, copies of the **Prime Contractor's Notice Letter for EPA Form 6100-2**, **EPA Form 6100-3**, and **EPA Form 6100-4**.

If no DBE participation was obtained, the Loan Recipient must submit a separate letter documenting that a "**good-faith effort**" was made to secure **DBE** participation. This letter is submitted along with the above-mentioned **"Loan Recipient's Certification and Summary"** form, newspaper **advertisement**, **Publisher's Affidavit**, **return receipts,** and copies of the **certified letters.** The SRF Loan Program provides a template to the Loan Recipient for this letter.

This documentation is the only form of documentation that will be accepted by the SRF Loan Program. Failure to provide the required documentation may result in a delay of the SRF Loan Program's approval of the Authority-to-Award/Bid Package, thereby delaying the award of the construction contract(s).

The Loan Recipient should direct all inquiries regarding the SRF Loan Program's requirements for **DBE** solicitation and documentation to Dr. Bagher Sami at (615) 532-0501, bagher.sami@tn.gov, or the following address:

Dr. Bagher Sami, Manager
Administrative and Financial Section
Tennessee State Revolving Fund Loan Program
WRS - Tennessee Tower, 12th Floor
312 Rosa L. Parks Avenue
Nashville, TN 37243

STATE REVOLVING FUND LOAN PROGRAM

Loan Recipient's Good Faith Effort Letter for DBE Participation

(Insert on Loan Recipient's Letterhead)

(Date)

Dr. Bagher Sami, Manager
Administrative and Financial Sections
State Revolving Fund Loan Program
William R. Snodgrass Tennessee Tower
312 Rosa L. Parks Avenue, 12th Floor
Nashville, TN 37243

RE: Good Faith Effort – Disadvantaged Business Enterprises (DBE) Participation
City/County/UD/Authority (??? County), Tennessee
Loan No. SRF/CWA/CGA/DWF/DWA/DGA 20??-???
Contract No. ????, Contract Description

Dear Dr. Sami:

This letter is to inform you that the City/County/UD/Authority did, in good faith, encourage Disadvantaged Business Enterprises (DBE) to participate in the above referenced project by placing a special notice to Disadvantaged Business Enterprises (DBE) firms in both the invitation to bid and the public advertisement for bids. The City/County/UD/Authority, through the consulting engineer, (A/E Consulting Firm), sent a copy of the invitation to bid and a set of contract documents to the Office of Minority Business Enterprises. The City/County/UD/Authority also sent certified letters, return receipts requested, to a minimum of ten (10) DBE potential subcontractors, professional service providers, suppliers, and equipment vendors requesting DBE participation through their office, A/E, or their contractor. The consulting engineer on this project is (Name), (Firm).

We have not received any DBE participation; we believe we have done a good faith effort.

If you have any questions, please don't hesitate to contact us.

Sincerely,

(Authorized Representative Name)
(Authorized Representative Title)

cc: (A/E Consultant Name and Firm)

STATE REVOLVING FUND LOAN PROGRAM

Loan Recipient's Certification and Summary
of
Disadvantaged Business Enterprises (DBE) Participation

SRF Loan Recipient: _____ SRF Loan No. _____

INSTRUCTIONS TO SRF LOAN RECIPIENTS

The SRF Loan Recipient's Authorized Representative must clearly indicate the Contractor's **Disadvantaged Business Enterprises (DBE)** participation results by placing a check in the appropriate box below. The remainder of the form must be completed if **DBE (Minority Business Enterprise-MBE or Women's Business Enterprise –WBE)** participation was obtained. The form must be signed and dated and returned to Dr. Bagher Sami of the Administrative Section of the SRF Loan Program.

The **completed Form** must be accompanied by **copies of the certified letters** sent from the selected Bidder to a minimum of 10 qualified DBE potential subcontractors, supplies vendor, services provider, and/or equipment vendors, and **copies of the corresponding return mail receipts**.

The SRF Loan Program must be notified of any changes, additions, or deletions to the contract during construction.

☐ **No, Disadvantaged Business Enterprises (DBE) participation was not obtained for this SRF-funded project.** I certify that a good-faith effort was made to solicit **DBE** participation in accordance with the four affirmative steps outlined in the SRF Loan Program's Requirements for Solicitation and Documentation of **DBE** Participation on SRF-Funded Projects. A letter documenting that a good–faith effort was made to secure **DBE** participation has been provided to the SRF Loan Program.

OR

☐ **Yes, Disadvantaged Business Enterprises (DBE) participation was obtained for this SRF-funded project.** I certify that the **DBE** firms participating in this SRF-funded project are qualified in accordance with the SRF Loan Program's Requirements for Solicitation and Documentation of **DBE** Participation on SRF-Funded Projects. Below is a listing of firms to be utilized and the amounts of their respective participation.

1. DBE type (circle one): Subcontractor, Supplies Vendor, Service Provider, Equipment Vendor
DBE Name: _____
Address: _____
Subcontract Amount: $ _____ **MBE** ____ **WBE** ____ **% of Contract $:** _____ %

2. DBE type (circle one): Subcontractor, Supplies Vendor, Service Provider, Equipment Vendor
DBE Name: _____
Address: _____
Subcontract Amount: $ _____ **MBE** ____ **WBE** ____ **% of Contract $:** _____ %

3. DBE type (circle one): Subcontractor, Supplies Vendor, Service Provider, Equipment Vendor
DBE Name: _____
Address: _____
Subcontract Amount: $ _____ **MBE** ____ **WBE** ____ **% of Contract $:** _____ %

4. DBE type (circle one): Subcontractor, Supplies Vendor, Service Provider, Equipment Vendor
DBE Name: _____
Address: _____
Subcontract Amount: $ _____ **MBE** ____ **WBE** ____ **% of Contract $:** _____ %

PARTICIPATION SUMMARY

Total SRF Loan Amount: $ _____ **Total Construction Contract Amount:** $ _____

Total MBE Participation: $ _____ **Total WBE Participation:** $ _____

_____ _____
Signature and Title of SRF Loan Recipient's Authorized Representative Date

STATE REVOLVING FUND LOAN PROGRAM

Bidder's Requirements for Solicitation and Documentation
of
Disadvantaged Business Enterprises (DBE) Participation

A goal-oriented system has been established to promote **Disadvantaged Business Enterprises (DBE)** participation by providing construction services, professional services, supplies, and/or equipment on SRF Loan-funded water and wastewater projects. It is the Bidder's responsibility to make a good faith effort to secure participation by **DBE** subcontractors, professional service providers, suppliers, and/or equipment vendors.

DEFINITIONS

DBE - Minority Business Enterprise (MBE): A qualified socially and economically disadvantaged minority-owned business certified by any State or Federal agency, such as the Tennessee Department of Transportation, U.S. EPA's Office of Small and Disadvantaged Business Utilization, or the U.S. Small Business Administration.

DBE - Women's Business Enterprise (WBE): A qualified independent business at least 51% owned by a woman or women and certified by any State or Federal agency such as the Tennessee Department of Transportation, U.S. EPA's Office of Small and Disadvantaged Business Utilization, or the U.S. Small Business Administration.

Fair-Share Goals: The MBE fair-share goal is 2.6% for construction and 5.2% for supplies, services, and equipment. The WBE fair share goal is 2.6% for construction and 5.2% for supplies, services, and equipment.

INSTRUCTIONS TO BIDDERS

Pre-Bid Requirements

All Bidders must send letters by certified mail with return receipt requested to a minimum of 10 certified **DBE** subcontractors, professional service providers, suppliers, and/or equipment vendors to solicit their subcontract participation in the work. Lists of certified **DBE** firms may be obtained from various State and Federal agencies, including the following:

Tennessee Department of Transportation
Small Business Development
505 Deaderick Street, Suite 1800
Nashville, TN 37243-0347
(615) 741-3681
http://www.tdot.state.tn.us/dbedirectinternet/Vendor.aspx

Mr. W. Clinton Smith, District Director
U.S. Small Business Administration
50 Vantage Way, Suite 201
Nashville, TN 37228
(615) 736-5881
http://pro-net.sba.gov/

U.S. Environmental Protection Agency
Office of Small and Disadvantaged Business Utilization
1200 Pennsylvania Avenue, N.W. (1230A)
Washington, D.C. 20460
(202) 564-4100
http://www.epa.gov/osdbu/

Post-Bid Requirements

Whether or not DBE participation was obtained, the successful Bidder (Prime Contractor) must maintain supporting documents such as certification lists, solicitation documents, letters of intent, contracts, etc., for the duration of the project.

If DBE participation was obtained, the apparent successful Bidder must identify to the Loan Recipient all **DBE** firms to be utilized on the contract and the respective **DBE** type--subcontractors, supplies vendors, service providers, and/or equipment vendors (see "Loan Recipient's Certification and Summary" form)**.** Copies of the State's or Federal agency's **DBE** certification list(s) identifying that the **DBE** firms are certified minority or women's business enterprises must be provided to the Loan Recipient. In addition, copies of the **Prime Contractor's Notice Letter for EPA Form 6100-2**, **EPA Form 6100-3** (to be co-completed by the Prime Contractor and each DBE subcontractor**)**, and **EPA Form 6100-4** must also be provided to the Loan Recipient prior to tentative loan award. The Prime Contractor must provide **EPA Form 6100-2** to each **DBE** utilized on the contract.

If no DBE participation was obtained by the apparent successful Bidder, it remains the responsibility of the Prime Contractor to provide documentation to the Loan Recipient, prior to contract award, that a good faith effort was made to obtain **DBE** participation. Copies of the **certified letters** sent to a minimum of 10 qualified **DBE** potential subcontractors, supplies vendors, service providers, and/or equipment vendors and the corresponding **return mail receipts** are the only documentation of a good-faith effort that will be acceptable to the Loan Recipient.

*Failure to provide the required certified letters, return receipts, State or Federal agency **DBE** certification list(s), **Prime Contractor's Notice Letter for EPA Form 6100-2**, **EPA Form 6100-3**, and **EPA Form 6100-4** to the Loan Recipient may delay the contract award until the required documentation has been provided to and accepted by the Loan Recipient.*

STATE REVOLVING FUND LOAN PROGRAM

Contractor Receipt Letter – Form 6100-2

(Please Insert on Contractor Letterhead)

(Date)

Dr. Bagher Sami, Manager
Administrative and Financial Sections
State Revolving Fund Loan Program
William R. Snodgrass Tennessee Tower
312 Rosa L. Parks Avenue, 12th Floor
Nashville, TN 37243

RE: Receipt and Distribution of EPA Form 6100-2
Disadvantaged Business Enterprise (DBE) Participation
(City/County/UD/Authority) (??? County), Tennessee
Loan No. SRF/CWA/CGA/DWF/DWA/DGA 20??-???
(Contract Name and/or Number)

Dear Dr. Sami:

This letter is to inform you the EPA Form 6100-2 was received from the (City/County/UD/Authority) and was then given to all DBE Subcontractors as required who are going to provide either construction, services, supplies, or equipment for this project.

If you have any questions concerning this notification, please contact us at (Phone No., e-mail, etc.).

Sincerely,

(Contractors Authorized Representative)
(Title)

cc: (Consulting Engineer for the contract)
(City/County/UD/Authority's Authorized Representative)

United States Environmental Protection Agency

OMB Control No: 2090-0030
Approved: 8/13/2013
Approval Expires: 8/31/2015

Disadvantaged Business Enterprise (DBE) Program
DBE Subcontractor Participation Form

An EPA Financial Assistance Agreement Recipient must require its prime contractors to provide this form to its DBE subcontractors. This form gives a DBE[1] subcontractor[2] the opportunity to describe work received and/or report any concerns regarding the EPA-funded project (e.g., in areas such as termination by prime contractor, late payments, etc.). The DBE subcontractor can, as an option, complete and submit this form to the EPA DBE Coordinator at any time during the project period of performance.

Subcontractor Name	Project Name	
Bid/ Proposal No.	Assistance Agreement ID No. (if known)	Point of Contact
Address		
Telephone No.	Email Address	
Prime Contractor Name	Issuing/Funding Entity:	

Contract Item Number	Description of Work Received from the Prime Contractor Involving Construction, Services , Equipment or Supplies	Amount Received by Prime Contractor

[1] A DBE is a Disadvantaged, Minority, or Woman Business Enterprise that has been certified by an entity from which EPA accepts certifications as described in 40 CFR 33.204-33.205 or certified by EPA. EPA accepts certifications from entities that meet or exceed EPA certification standards as described in 40 CFR 33.202.

[2] Subcontractor is defined as a company, firm, joint venture, or individual who enters into an agreement with a contractor to provide services pursuant to an EPA award of financial assistance.

United States Environmental Protection Agency

OMB Control No: 2090-0030
Approved: 8/13/2013
Approval Expires: 8/31/2015

Disadvantaged Business Enterprise (DBE) Program
DBE Subcontractor Participation Form

Please use the space below to report any concerns regarding the above EPA-funded project:

_____
_____
_____
_____
_____
_____
_____
_____
_____
_____
_____
_____
_____

Subcontractor Signature	Print Name
Title	**Date**

The public reporting and recordkeeping burden for this collection of information is estimated to average three (3) hours per response. Send comments on the Agency's need for this information, the accuracy of the provided burden estimates, and any suggested methods for minimizing respondent burden, including through the use of automated collection techniques to the Director, Collection Strategies Division, U.S. Environmental Protection Agency (2822T), 1200 Pennsylvania Ave., NW, Washington, D.C. 20460. Include the OMB control number in any correspondence. Do not send the completed form to this address.

United States Environmental Protection Agency

OMB Control No: 2090-0030
Approved: 8/13/2013
Approval Expires: 8/31/2015

Disadvantaged Business Enterprise (DBE) Program
DBE Subcontractor Performance Form

This form is intended to capture the DBE[1] subcontractor's[2] description of work to be performed and the price of the work submitted to the prime contractor. An EPA Financial Assistance Agreement Recipient must require its prime contractor to have its DBE subcontractors complete this form and include all completed forms in the prime contractors bid or proposal package.

Subcontractor Name	Project Name	
Bid/ Proposal No.	Assistance Agreement ID No. (if known)	Point of Contact
Address		
Telephone No.	Email Address	
Prime Contractor Name	Issuing/Funding Entity:	

Contract Item Number	Description of Work Submitted to the Prime Contractor Involving Construction, Services , Equipment or Supplies	Price of Work Submitted to the Prime Contractor

DBE Certified By: ___ DOT ___ SBA ___ Other: _____	Meets/ exceeds EPA certification standards? ___ YES ___ NO ___ Unknown

[1] A DBE is a Disadvantaged, Minority, or Woman Business Enterprise that has been certified by an entity from which EPA accepts certifications as described in 40 CFR 33.204-33.205 or certified by EPA. EPA accepts certifications from entities that meet or exceed EPA certification standards as described in 40 CFR 33.202.

[2] Subcontractor is defined as a company, firm, joint venture, or individual who enters into an agreement with a contractor to provide services pursuant to an EPA award of financial assistance.

United States Environmental Protection Agency

OMB Control No: 2090-0030
Approved: 8/13/2013
Approval Expires: 8/31/2015

Disadvantaged Business Enterprise (DBE) Program
DBE Subcontractor Performance Form

I certify under penalty of perjury that the forgoing statements are true and correct. Signing this form does not signify a commitment to utilize the subcontractors above. I am aware of that in the event of a replacement of a subcontractor, I will adhere to the replacement requirements set forth in 40 CFR Part 33 Section 33.302 (c).

Prime Contractor Signature	Print Name
Title	**Date**

Subcontractor Signature	Print Name
Title	**Date**

The public reporting and recordkeeping burden for this collection of information is estimated to average three (3) hours per response. Send comments on the Agency's need for this information, the accuracy of the provided burden estimates, and any suggested methods for minimizing respondent burden, including through the use of automated collection techniques to the Director, Collection Strategies Division, U.S. Environmental Protection Agency (2822T), 1200 Pennsylvania Ave., NW, Washington, D.C. 20460. Include the OMB control number in any correspondence. Do not send the completed form to this address.

United States Environmental Protection Agency

OMB Control No: 2090-0030
Approved: 8/13/2013
Approval Expires: 8/31/2015

Disadvantaged Business Enterprise (DBE) Program
DBE Subcontractor Utilization Form

This form is intended to capture the prime contractor's actual and/or anticipated use of identified certified DBE[1] subcontractors[2] and the estimated dollar amount of each subcontract. An EPA Financial Assistance Agreement Recipient must require its prime contractors to complete this form and include it in the bid or proposal package. Prime contractors should also maintain a copy of this form on file.

Prime Contractor Name		Project Name
Bid/ Proposal No.	Assistance Agreement ID No. (if known)	Point of Contact
Address		
Telephone No.		Email Address
Issuing/Funding Entity:		

I have identified potential DBE certified subcontractors	___ YES	___ NO
If yes, please complete the table below. If no, please explain:		

Subcontractor Name/ Company Name	**Company Address/ Phone/ Email**	**Est. Dollar Amt**	**Currently DBE Certified?**

Continue on back if needed

[1] A DBE is a Disadvantaged, Minority, or Woman Business Enterprise that has been certified by an entity from which EPA accepts certifications as described in 40 CFR 33.204-33.205 or certified by EPA. EPA accepts certifications from entities that meet or exceed EPA certification standards as described in 40 CFR 33.202.

[2] Subcontractor is defined as a company, firm, joint venture, or individual who enters into an agreement with a contractor to provide services pursuant to an EPA award of financial assistance.

United States Environmental Protection Agency

OMB Control No: 2090-0030
Approved: 8/13/2013
Approval Expires: 8/31/2015

Disadvantaged Business Enterprise (DBE) Program
DBE Subcontractor Utilization Form

I certify under penalty of perjury that the forgoing statements are true and correct. Signing this form does not signify a commitment to utilize the subcontractors above. I am aware of that in the event of a replacement of a subcontractor, I will adhere to the replacement requirements set forth in 40 CFR Part 33 Section 33.302 (c).

Prime Contractor Signature	Print Name
Title	**Date**

The public reporting and recordkeeping burden for this collection of information is estimated to average three (3) hours per response. Send comments on the Agency's need for this information, the accuracy of the provided burden estimates, and any suggested methods for minimizing respondent burden, including through the use of automated collection techniques to the Director, Collection Strategies Division, U.S. Environmental Protection Agency (2822T), 1200 Pennsylvania Ave., NW, Washington, D.C. 20460. Include the OMB control number in any correspondence. Do not send the completed form to this address.

TENNESSEE DEPARTMENT OF TRANSPORTATION (TDOT)

Certified Disadvantaged Business Enterprises (DBE) List

Below is the link to the Tennessee Department of Transportation (TDOT) Web Page for the Certified DBE List. This certified list is periodically updated by TDOT.

Here is the link: http://www.tdot.state.tn.us/dbedirectinternet/Vendor.aspx

EMPLOYEE RIGHTS
UNDER THE DAVIS-BACON ACT

FOR LABORERS AND MECHANICS EMPLOYED ON FEDERAL OR FEDERALLY ASSISTED CONSTRUCTION PROJECTS

THE UNITED STATES DEPARTMENT OF LABOR WAGE AND HOUR DIVISION

PREVAILING WAGES

You must be paid not less than the wage rate listed in the Davis-Bacon Wage Decision posted with this Notice for the work you perform.

OVERTIME

You must be paid not less than one and one-half times your basic rate of pay for all hours worked over 40 in a work week. There are few exceptions.

ENFORCEMENT

Contract payments can be withheld to ensure workers receive wages and overtime pay due, and liquidated damages may apply if overtime pay requirements are not met. Davis-Bacon contract clauses allow contract termination and debarment of contractors from future federal contracts for up to three years. A contractor who falsifies certified payroll records or induces wage kickbacks may be subject to civil or criminal prosecution, fines and/or imprisonment.

APPRENTICES

Apprentice rates apply only to apprentices properly registered under approved Federal or State apprenticeship programs.

PROPER PAY

If you do not receive proper pay, or require further information on the applicable wages, contact the Contracting Officer listed below:

or contact the U.S. Department of Labor's Wage and Hour Division.

For additional information:

1-866-4-USWAGE

(1-866-487-9243) TTY: 1-877-889-5627

WWW.WAGEHOUR.DOL.GOV

DERECHOS DEL EMPLEADO

BAJO LA LEY DAVIS-BACON

PARA OBREROS Y MECÁNICOS EMPLEADOS EN PROYECTOS DE CONSTRUCCIÓN FEDERAL O CON ASISTENCIA FEDERAL

LA SECCIÓN DE HORAS Y SUELDOS DEL DEPARTAMENTO DE TRABAJO DE EEUU

SALARIOS PREVALECIENTES

No se le puede pagar menos de la tasa de pago indicada en la Decisión de Salarios Davis-Bacon fijada con este Aviso para el trabajo que Ud. desempeña.

SOBRETIEMPO

Se le ha de pagar no menos de tiempo y medio de su tasa básica de pago por todas las horas trabajadas en exceso de 40 en una semana laboral. Existen pocas excepciones.

CUMPLIMIENTO

Se pueden retener pagos por contratos para asegurarse que los obreros reciban los salarios y el pago de sobretiempo debidos, y se podría aplicar daños y perjuicios si no se cumple con las exigencias del pago de sobretiempo. Las cláusulas contractuales de Davis-Bacon permiten la terminación y exclusión de contratistas para efectuar futuros contratos federales hasta tres años. El contratista que falsifique los registros certificados de las nóminas de pago o induzca devoluciones de salarios puede ser sujeto a procesamiento civil o criminal, multas y/o encarcelamiento.

APRENDICES

Las tasas de aprendices sólo se aplican a aprendices correctamente inscritos bajo programas federales o estatales aprobados.

PAGO APROPIADO

Si Ud. no recibe el pago apropiado, o precisa de información adicional sobre los salarios aplicables, póngase en contacto con el Contratista Oficial que aparece abajo:

o póngase en contacto con la Sección de Horas y Sueldos del Departamento de Trabajo de EEUU.

Para obtener información adicional:

1-866-4-USWAGE

(1-866-487-9243) TTY: 1-877-889-5627

WWW.WAGEHOUR.DOL.GOV

WHD U.S. Wage and Hour Division

Project Wage Rate Sheet

U.S. Department of Housing and Urban Development
Office of Labor Relations

PROJECT NAME:	WAGE DECISION NUMBER/MODIFICATION NUMBER:
PROJECT NUMBER:	PROJECT COUNTY:

WORK CLASSIFICATION	BASIC HOURLY RATE (BHR)	FRINGE BENEFITS	TOTAL HOURLY WAGE RATE	LABORERS FRINGE BENEFITS:		$
Bricklayers			$	GROUP #	BHR	TOTAL WAGE
Carpenters			$			$
Cement Masons			$			$
Drywall Hangers			$			$
Electricians			$			$
Iron Workers			$			$
Painters			$	OPERATORS FRINGE BENEFITS:		$
Plumbers			$	GROUP #	BHR	TOTAL WAGE
Roofers			$			$
Sheet Metal Workers			$			$
Soft Floor Layers			$			$
Tapers			$			$
Tile Setters			$	TRUCK DRIVERS FRINGE BENEFITS:		$
OTHER CLASSIFICATIONS				GROUP #	BHR	TOTAL WAGE
			$			$
			$			$
			$			$

ADDITIONAL CLASSIFICATIONS (HUD Form 4230-A)

WORK CLASSIFICATION	BASIC HOURLY RATE	FRINGE BENEFITS	TOTAL HOURLY WAGE RATE	DATE OF HUD SUBMISSION TO DOL	DATE OF DOL APPROVAL
			$		
			$		
			$		
			$		

>

General Decision Number: TN150135 01/02/2015 TN135

Superseded General Decision Number: TN20140135

State: Tennessee

Construction Type: Heavy
Including Water and Sewer Line Construction

County: Shelby County in Tennessee.

HEAVY CONSTRUCTION PROJECTS (including sewer/water construction).

Note: Executive Order (EO) 13658 establishes an hourly minimum wage of $10.10 for 2015 that applies to all contracts subject to the Davis-Bacon Act for which the solicitation is issued on or after January 1, 2015. If this contract is covered by the EO, the contractor must pay all workers in any classification listed on this wage determination at least $10.10 (or the applicable wage rate listed on this wage determination, if it is higher) for all hours spent performing on the contract. The EO minimum wage rate will be adjusted annually. Additional information on contractor requirements and worker protections under the EO is available at www.dol.gov/whd/govcontracts.

Modification Number	Publication Date
0	01/02/2015

ELEC0474-015 01/07/2013

	Rates	Fringes
ELECTRICIAN	$ 24.30	11.46

---

* ENGI0369-012 05/01/2013

	Rates	Fringes
Operating Engineers: Bulldozer, Crane, and Forklift	$ 24.47	10.85

LABO0386-001 05/01/2013

	Rates	Fringes
LABORER: Common or General	$ 15.60	5.35

SUTN2009-133 12/02/2009

	Rates	Fringes
LABORER: Flagger	$ 8.73	0.00
LABORER: Pipelayer	$ 11.68	0.00
OPERATOR: Backhoe/Excavator/Trackhoe	$ 16.82	0.00
OPERATOR: Loader	$ 13.50	0.00

TRUCK DRIVER: Dump Truck.....$ 10.76 0.00

WELDERS - Receive rate prescribed for craft performing operation to which welding is incidental.

==========

Unlisted classifications needed for work not included within the scope of the classifications listed may be added after award only as provided in the labor standards contract clauses (29CFR 5.5 (a) (1) (ii)).

The body of each wage determination lists the classification and wage rates that have been found to be prevailing for the cited type(s) of construction in the area covered by the wage determination. The classifications are listed in alphabetical order of "identifiers" that indicate whether the particular rate is a union rate (current union negotiated rate for local), a survey rate (weighted average rate) or a union average rate (weighted union average rate).

Union Rate Identifiers

A four letter classification abbreviation identifier enclosed in dotted lines beginning with characters other than "SU" or "UAVG" denotes that the union classification and rate were prevailing for that classification in the survey. Example: PLUM0198-005 07/01/2014. PLUM is an abbreviation identifier of the union which prevailed in the survey for this classification, which in this example would be Plumbers. 0198 indicates the local union number or district council number where applicable, i.e., Plumbers Local 0198. The next number, 005 in the example, is an internal number used in processing the wage determination. 07/01/2014 is the effective date of the most current negotiated rate, which in this example is July 1, 2014.

Union prevailing wage rates are updated to reflect all rate changes in the collective bargaining agreement (CBA) governing this classification and rate.

Survey Rate Identifiers

Classifications listed under the "SU" identifier indicate that no one rate prevailed for this classification in the survey and the published rate is derived by computing a weighted average rate based on all the rates reported in the survey for that classification. As this weighted average rate includes all rates reported in the survey, it may include both union and non-union rates. Example: SULA2012-007 5/13/2014. SU indicates the rates are survey rates based on a weighted average calculation of rates and are not majority rates. LA indicates the State of Louisiana. 2012 is the year of survey on which these classifications and rates are based. The next number, 007 in the example, is an internal number used in producing the wage determination. 5/13/2014 indicates the survey completion date for the classifications and rates under that identifier.

Survey wage rates are not updated and remain in effect until a new survey is conducted.

Union Average Rate Identifiers

Classification(s) listed under the UAVG identifier indicate that no single majority rate prevailed for those classifications; however, 100% of the data reported for the classifications was union data. EXAMPLE: UAVG-OH-0010 08/29/2014. UAVG indicates that the rate is a weighted union average rate. OH indicates the state. The next number, 0010 in the example, is an internal number used in producing the wage determination. 08/29/2014 indicates the survey completion date for the classifications and rates under that identifier.

A UAVG rate will be updated once a year, usually in January of each year, to reflect a weighted average of the current negotiated/CBA rate of the union locals from which the rate is based.

WAGE DETERMINATION APPEALS PROCESS

1.) Has there been an initial decision in the matter? This can be:

* an existing published wage determination
* a survey underlying a wage determination
* a Wage and Hour Division letter setting forth a position on a wage determination matter
* a conformance (additional classification and rate) ruling

On survey related matters, initial contact, including requests for summaries of surveys, should be with the Wage and Hour Regional Office for the area in which the survey was conducted because those Regional Offices have responsibility for the Davis-Bacon survey program. If the response from this initial contact is not satisfactory, then the process described in 2.) and 3.) should be followed.

With regard to any other matter not yet ripe for the formal process described here, initial contact should be with the Branch of Construction Wage Determinations. Write to:

Branch of Construction Wage Determinations
Wage and Hour Division
U.S. Department of Labor
200 Constitution Avenue, N.W.
Washington, DC 20210

2.) If the answer to the question in 1.) is yes, then an interested party (those affected by the action) can request review and reconsideration from the Wage and Hour Administrator (See 29 CFR Part 1.8 and 29 CFR Part 7). Write to:

Wage and Hour Administrator
U.S. Department of Labor
200 Constitution Avenue, N.W.
Washington, DC 20210

The request should be accompanied by a full statement of the interested party's position and by any information (wage payment data, project description, area practice material, etc.) that the requestor considers relevant to the issue.

3.) If the decision of the Administrator is not favorable, an interested party may appeal directly to the Administrative Review Board (formerly the Wage Appeals Board). Write to:

Administrative Review Board
U.S. Department of Labor
200 Constitution Avenue, N.W.
Washington, DC 20210

4.) All decisions by the Administrative Review Board are final.

==========

END OF GENERAL DECISION

STATE REVOLVING FUND LOAN PROGRAM

Bidder's Requirements

Davis-Bacon Act Wage Determination

The Loan Recipient must ensure the bidder is in compliance with the Davis-Bacon Act as outlined below. Additionally, ten (10) days prior to the scheduled bid opening date, the wage rates need to be checked to ensure they have not changed.

The Davis-Bacon Act as amended, requires that each contract over $2,000 to which the United States or the District of Columbia is a party for the construction, alteration, or repair of public buildings or public works shall contain a clause setting forth the minimum wages to be paid to various classes of laborers and mechanics employed under the contract. Under the provisions of the Act, contractors or their subcontractors are to pay workers employed directly upon the site of the work no less than the locally prevailing wages and fringe benefits paid on projects of a similar character. The Davis-Bacon Act directs the Secretary of Labor to determine such local prevailing wage rates.

The **wage determination** (including any additional **classifications** and **wage rates** conformed) **and** a Davis-Bacon poster (WH-1321) **must be posted on the work site at all times** by the contractor and its subcontractors in a prominent and accessible place where it can be easily seen. The WH-1321 poster **may be obtained at no charge** from offices of the Wage and Hour Division.

With each **pay estimate** submitted, the contractors **must submit** a certification stating that workers have been paid the current prevailing wage rates for each classification according to the Davis-Bacon wage rate schedule currently in effect for this project.

Wage Determinations

A "wage determination" is the listing of wage rates and fringe benefit rates for each classification of laborers and mechanics which the Administrator of the Wage and Hour Division of the U.S. Department of Labor has determined to be prevailing in a given area for a particular type of construction (e.g., building, heavy, highway, or residential).

Extensions of Wage Determinations

When a general wage determination has not been awarded within 90 days after bid opening, the head of the contracting/assisting agency may request an extension of the 90 day period from the Wage and Hour Administrator. When, due to unavoidable circumstances, a project wage determination expires before award but after bid opening, the head of the contracting/assisting agency may request an extension of the expiration date of the project wage determination in the bid specifications instead of issuing a new wage determination.

Extension requests should be supported by a written finding including a brief statement of the factual support, that extension of the expiration date of the determination is necessary and proper in the public interest to prevent injustice or undue hardship or to avoid serious impairment in the conduct of Government business.

The Administrator of the Wage and Hour Division of the U.S. Department of Labor will either grant or deny the request for an extension after consideration of all the circumstances, including an examination to determine if the previously issued rates remain prevailing. If a request for the extension of a project wage determination is denied, a new wage determination will be issued to replace an expired project wage determination.

Additional information concerning the Davis-Bacon Act and current wage rate determinations can be obtained at the following sites: www.gpo.gov/davisbacon/referencemat.html and www.wdol.gov/ .

STATE REVOLVING FUND LOAN PROGRAM

Wage Rate Requirements Under FY 2010 Appropriations

3. Contract and Subcontract provisions.

(a) The Recipient shall insure that the subrecipient(s) shall insert in full in any contract in excess of $2,000 which is entered into for the actual construction, alteration and/or repair, including painting and decorating, of a treatment work under the CWSRF or a construction project under the DWSRF financed in whole or in part from Federal funds or in accordance with guarantees of a Federal agency or financed from funds obtained by pledge of any contract of a Federal agency to make a loan, grant or annual contribution (except where a different meaning is expressly indicated), and which is subject to the labor standards provisions of any of the acts listed in § 5.1 or the FY 2010 appropriation , the following clauses:

(1) Minimum wages.

(i) All laborers and mechanics employed or working upon the site of the work will be paid unconditionally and not less often than once a week, and without subsequent deduction or rebate on any account (except such payroll deductions as are permitted by regulations issued by the Secretary of Labor under the Copeland Act (29 CFR part 3)), the full amount of wages and bona fide fringe benefits (or cash equivalents thereof) due at time of payment computed at rates not less than those contained in the wage determination of the Secretary of Labor which is attached hereto and made a part hereof, regardless of any contractual relationship which may be alleged to exist between the contractor and such laborers and mechanics.

Contributions made or costs reasonably anticipated for bona fide fringe benefits under section 1(b)(2) of the Davis-Bacon Act on behalf of laborers or mechanics are considered wages paid to such laborers or mechanics, subject to the provisions of paragraph (a)(1)(iv) of this section; also, regular contributions made or costs incurred for more than a weekly period (but not less often than quarterly) under plans, funds, or programs which cover the particular weekly period, are deemed to be constructively made or incurred during such weekly period. Such laborers and mechanics shall be paid the appropriate wage rate and fringe benefits on the wage determination for the classification of work actually performed, without regard to skill, except as provided in § 5.5(a)(4). Laborers or mechanics performing work in more than one classification may be compensated at the rate specified for each classification for the time actually worked therein: Provided, That the employer's payroll records accurately set forth the time spent in each classification in which work is performed. The wage determination (including any additional classification and wage rates conformed under paragraph (a)(1)(ii) of this section) and the Davis-Bacon poster (WH-1321) shall be posted at all times by the contractor and its subcontractors at the site of the work in a prominent and accessible place where it can be easily seen by the workers.

Subrecipients may obtain wage determinations from the U.S. Department of Labor’s web site, www.dol.gov.

(ii)(A) The subrecipient(s), on behalf of EPA, shall require that any class of laborers or mechanics, including helpers, which is not listed in the wage determination and which is to be employed under the contract shall be classified in conformance with the wage determination. The State award official shall approve a request for an additional classification and wage rate and fringe benefits therefore only when the following criteria have been met:

(1) The work to be performed by the classification requested is not performed by a classification in the wage determination; and

(2) The classification is utilized in the area by the construction industry; and

(3) The proposed wage rate, including any bona fide fringe benefits, bears a reasonable relationship to the wage rates contained in the wage determination.

(B) If the contractor and the laborers and mechanics to be employed in the classification (if known), or their representatives, and the subrecipient(s) agree on the classification and wage rate (including the amount designated for fringe benefits where appropriate), documentation of the action taken and the request, including the local wage determination shall be sent by the subrecipient (s) to the State award official. The State award official will transmit the request, to the Administrator of the Wage and Hour Division, Employment Standards Administration, U.S. Department of Labor, Washington, DC 20210 and to the EPA DB Regional Coordinator concurrently. The Administrator, or an authorized representative, will approve, modify, or disapprove every additional classification request within 30 days of receipt and so advise the State award official or will notify the State award official within the 30-day period that additional time is necessary.

(C) In the event the contractor, the laborers or mechanics to be employed in the classification or their representatives, and the subrecipient(s) do not agree on the proposed classification and wage rate (including the amount designated for fringe benefits, where appropriate), the award official shall refer the request and the local wage determination, including the views of all interested parties and the recommendation of the State award official, to the Administrator for determination. The request shall be sent to the EPA DB Regional Coordinator concurrently. The Administrator, or an authorized representative, will issue a determination within 30 days of receipt of the request and so advise the contracting officer or will notify the contracting officer within the 30-day period that additional time is necessary.

(D) The wage rate (including fringe benefits where appropriate) determined pursuant to paragraphs (a)(1)(ii)(B) or (C) of this section, shall be paid to all workers performing work in the classification under this contract from the first day on which work is performed in the classification.

(iii) Whenever the minimum wage rate prescribed in the contract for a class of laborers or mechanics includes a fringe benefit which is not expressed as an hourly rate, the

contractor shall either pay the benefit as stated in the wage determination or shall pay another bona fide fringe benefit or an hourly cash equivalent thereof.

(iv) If the contractor does not make payments to a trustee or other third person, the contractor may consider as part of the wages of any laborer or mechanic the amount of any costs reasonably anticipated in providing bona fide fringe benefits under a plan or program, Provided, That the Secretary of Labor has found, upon the written request of the contractor, that the applicable standards of the Davis-Bacon Act have been met. The Secretary of Labor may require the contractor to set aside in a separate account assets for the meeting of obligations under the plan or program.

(2) Withholding. The subrecipient(s), shall upon written request of the EPA Award Official or an authorized representative of the Department of Labor, withhold or cause to be withheld from the contractor under this contract or any other Federal contract with the same prime contractor, or any other federally-assisted contract subject to Davis-Bacon prevailing wage requirements, which is held by the same prime contractor, so much of the accrued payments or advances as may be considered necessary to pay laborers and mechanics, including apprentices, trainees, and helpers, employed by the contractor or any subcontractor the full amount of wages required by the contract. In the event of failure to pay any laborer or mechanic, including any apprentice, trainee, or helper, employed or working on the site of the work, all or part of the wages required by the contract, the (Agency) may, after written notice to the contractor, sponsor, applicant, or owner, take such action as may be necessary to cause the suspension of any further payment, advance, or guarantee of funds until such violations have ceased.

(3) Payrolls and basic records.

(i) Payrolls and basic records relating thereto shall be maintained by the contractor during the course of the work and preserved for a period of three years thereafter for all laborers and mechanics working at the site of the work. Such records shall contain the name, address, and social security number of each such worker, his or her correct classification, hourly rates of wages paid (including rates of contributions or costs anticipated for bona fide fringe benefits or cash equivalents thereof of the types described in section 1(b)(2)(B) of the Davis-Bacon Act), daily and weekly number of hours worked, deductions made and actual wages paid. Whenever the Secretary of Labor has found under 29 CFR 5.5(a)(1)(iv) that the wages of any laborer or mechanic include the amount of any costs reasonably anticipated in providing benefits under a plan or program described in section 1(b)(2)(B) of the Davis-Bacon Act, the contractor shall maintain records which show that the commitment to provide such benefits is enforceable, that the plan or program is financially responsible, and that the plan or program has been communicated in writing to the laborers or mechanics affected, and records which show the costs anticipated or the actual cost incurred in providing such benefits. Contractors employing apprentices or trainees under approved programs shall maintain written evidence of the registration of apprenticeship programs and certification of trainee programs, the registration of the apprentices and trainees, and the ratios and wage rates prescribed in the applicable programs.

(ii)(A) The contractor shall submit weekly, for each week in which any contract work is performed, a copy of all payrolls to the subrecipient, that is, the entity that receives the sub-grant or loan from the State capitalization grant recipient. Such documentation shall be available on request of the State recipient or EPA. As to each payroll copy received, the subrecipient shall provide written confirmation in a form satisfactory to the State indicating whether or not the project is in compliance with the requirements of 29 CFR 5.5(a)(1) based on the most recent payroll copies for the specified week. The payrolls shall set out accurately and completely all of the information required to be maintained under 29 CFR 5.5(a)(3)(i), except that full social security numbers and home addresses shall not be included on the weekly payrolls. Instead the payrolls shall only need to include an individually identifying number for each employee (e.g., the last four digits of the employee's social security number). The required weekly payroll information may be submitted in any form desired. Optional Form WH-347 is available for this purpose from the Wage and Hour Division Web site at http://www.dol.gov/esa/whd/forms/wh347instr.htm or its successor site. The prime contractor is responsible for the submission of copies of payrolls by all subcontractors. Contractors and subcontractors shall maintain the full social security number and current address of each covered worker, and shall provide them upon request to the subrecipient(s) for transmission to the State or EPA if requested by EPA , the State, the contractor, or the Wage and Hour Division of the Department of Labor for purposes of an investigation or audit of compliance with prevailing wage requirements. It is not a violation of this section for a prime contractor to require a subcontractor to provide addresses and social security numbers to the prime contractor for its own records, without weekly submission to the subrecipient(s).

(B) Each payroll submitted shall be accompanied by a “Statement of Compliance,” signed by the contractor or subcontractor or his or her agent who pays or supervises the payment of the persons employed under the contract and shall certify the following:

(1) That the payroll for the payroll period contains the information required to be provided under § 5.5 (a)(3)(ii) of Regulations, 29 CFR part 5, the appropriate information is being maintained under § 5.5 (a)(3)(i) of Regulations, 29 CFR part 5, and that such information is correct and complete;

(2) That each laborer or mechanic (including each helper, apprentice, and trainee) employed on the contract during the payroll period has been paid the full weekly wages earned, without rebate, either directly or indirectly, and that no deductions have been made either directly or

indirectly from the full wages earned, other than permissible deductions as set forth in Regulations, 29 CFR part 3;

(3) That each laborer or mechanic has been paid not less than the applicable wage rates and fringe benefits or cash equivalents for the classification of work performed, as specified in the applicable wage determination incorporated into the contract.

(C) The weekly submission of a properly executed certification set forth on the reverse side of Optional Form WH-347 shall satisfy the requirement for submission of the "Statement of Compliance" required by paragraph (a)(3)(ii)(B) of this section.

(D) The falsification of any of the above certifications may subject the contractor or subcontractor to civil or criminal prosecution under section 1001 of title 18 and section 231 of title 31 of the United States Code.

(iii) The contractor or subcontractor shall make the records required under paragraph (a)(3)(i) of this section available for inspection, copying, or transcription by authorized representatives of the State, EPA or the Department of Labor, and shall permit such representatives to interview employees during working hours on the job. If the contractor or subcontractor fails to submit the required records or to make them available, the Federal agency or State may, after written notice to the contractor, sponsor, applicant, or owner, take such action as may be necessary to cause the suspension of any further payment, advance, or guarantee of funds. Furthermore, failure to submit the required records upon request or to make such records available may be grounds for debarment action pursuant to 29 CFR 5.12.

(4) Apprentices and trainees--

(i) Apprentices. Apprentices will be permitted to work at less than the predetermined rate for the work they performed when they are employed pursuant to and individually registered in a bona fide apprenticeship program registered with the U.S. Department of Labor, Employment and Training Administration, Office of Apprenticeship Training, Employer and Labor Services, or with a State Apprenticeship Agency recognized by the Office, or if a person is employed in his or her first 90 days of probationary employment as an apprentice in such an apprenticeship program, who is not individually registered in the program, but who has been certified by the Office of Apprenticeship Training, Employer and Labor Services or a State Apprenticeship Agency (where appropriate) to be eligible for probationary employment as an apprentice. The allowable ratio of apprentices to journeymen on the job site in any craft classification shall not be greater than the ratio permitted to the contractor as to the entire work force under the registered program. Any worker listed on a payroll at an apprentice wage rate, who is not registered or otherwise employed as stated above, shall be paid not less than the applicable wage rate on the wage determination for the classification of work actually performed. In addition, any apprentice performing work on the job site in excess of the ratio permitted under the registered program shall be paid not less than the applicable wage rate on the wage determination for the work actually performed. Where a contractor is performing construction on a project in a locality other than that in which its program is registered, the ratios and wage rates (expressed in percentages of the journeyman's hourly rate) specified in the contractor's or subcontractor's registered program shall be observed. Every apprentice must be paid at not less than the rate specified in the registered program for the apprentice's level of progress, expressed as a percentage of the journeymen hourly rate specified in the applicable wage determination. Apprentices shall be paid fringe benefits in accordance with the provisions of the apprenticeship program. If the

apprenticeship program does not specify fringe benefits, apprentices must be paid the full amount of fringe benefits listed on the wage determination for the applicable classification. If the Administrator determines that a different practice prevails for the applicable apprentice classification, fringes shall be paid in accordance with that determination. In the event the Office of Apprenticeship Training, Employer and Labor Services, or a State Apprenticeship Agency

recognized by the Office, withdraws approval of an apprenticeship program, the contractor will no longer be permitted to utilize apprentices at less than the applicable predetermined rate for the work performed until an acceptable program is approved.

(ii) Trainees. Except as provided in 29 CFR 5.16, trainees will not be permitted to work at less than the predetermined rate for the work performed unless they are employed pursuant to and individually registered in a program which has received prior approval, evidenced by formal certification by the U.S. Department of Labor, Employment and Training Administration. The ratio of trainees to journeymen on the job site shall not be greater than permitted under the plan approved by the Employment and Training Administration. Every trainee must be paid at not less than the rate specified in the approved program for the trainee's level of progress, expressed as a percentage of the journeyman hourly rate specified in the applicable wage determination. Trainees shall be paid fringe benefits in accordance with the provisions of the trainee program. If the trainee program does not mention fringe benefits, trainees shall be paid the full amount of fringe benefits listed on the wage determination unless the Administrator of the Wage and Hour Division determines that there is an apprenticeship program associated with the corresponding journeyman wage rate on the wage determination which provides for less than full fringe benefits for apprentices. Any employee listed on the payroll at a trainee rate who is not registered and participating in a training plan approved by the Employment and Training Administration shall be paid not less than the applicable wage rate on the wage determination for the classification of work actually performed. In addition, any trainee performing work on the job site in excess of the ratio permitted under the registered program shall be paid not less than the applicable wage rate on the wage determination for the work actually performed. In the event the Employment and Training Administration withdraws approval of a training program, the contractor will no longer be permitted to utilize trainees at less than the applicable predetermined rate for the work performed until an acceptable program is approved.

(iii) Equal employment opportunity. The utilization of apprentices, trainees and journeymen under this part shall be in conformity with the equal employment opportunity requirements of Executive Order 11246, as amended, and 29 CFR part 30.

(5) Compliance with Copeland Act requirements. The contractor shall comply with the requirements of 29 CFR part 3, which are incorporated by reference in this contract.

(6) Subcontracts. The contractor or subcontractor shall insert in any subcontracts the clauses contained in 29 CFR 5.5(a)(1) through (10) and such other clauses as the EPA determines may by appropriate, and also a clause requiring the subcontractors to include these clauses in any lower tier subcontracts. The prime contractor shall be responsible for

the compliance by any subcontractor or lower tier subcontractor with all the contract clauses in 29 CFR 5.5.

(7) Contract termination; debarment. A breach of the contract clauses in 29 CFR 5.5 may be grounds for termination of the contract, and for debarment as a contractor and a subcontractor as provided in 29 CFR 5.12.

(8) Compliance with Davis-Bacon and Related Act requirements. All rulings and interpretations of the Davis-Bacon and Related Acts contained in 29 CFR parts 1, 3, and 5 are herein incorporated by reference in this contract.

(9) Disputes concerning labor standards. Disputes arising out of the labor standards provisions of this contract shall not be subject to the general disputes clause of this contract. Such disputes shall be resolved in accordance with the procedures of the Department of Labor set forth in 29 CFR parts 5, 6, and 7. Disputes within the meaning of this clause include disputes between the contractor (or any of its subcontractors) and Subrecipient(s), State, EPA, the U.S. Department of Labor, or the employees or their representatives.

(10) Certification of eligibility.

(i) By entering into this contract, the contractor certifies that neither it (nor he or she) nor any person or firm who has an interest in the contractor's firm is a person or firm ineligible to be awarded Government contracts by virtue of section 3(a) of the Davis-Bacon Act or 29 CFR 5.12(a)(1).

(ii) No part of this contract shall be subcontracted to any person or firm ineligible for award of a Government contract by virtue of section 3(a) of the Davis-Bacon Act or 29 CFR 5.12(a)(1).

(iii) The penalty for making false statements is prescribed in the U.S. Criminal Code, 18 U.S.C. 1001.

4. **Contract Provision for Contracts in Excess of $100,000.**

(a) Contract Work Hours and Safety Standards Act. The subrecipient shall insert the following clauses set forth in paragraphs (a)(1), (2), (3), and (4) of this section in full in any contract in an amount in excess of $100,000 and subject to the overtime provisions of the Contract Work Hours and Safety Standards Act. These clauses shall be inserted in addition to the clauses required by Item 3, above or 29 CFR 4.6. As used in this paragraph, the terms laborers and mechanics include watchmen and guards.

(1) Overtime requirements. No contractor or subcontractor contracting for any part of the contract work which may require or involve the employment of laborers or mechanics shall require or permit any such laborer or mechanic in any workweek in which he or she is employed on such work to work in excess of forty hours in such workweek unless such

laborer or mechanic receives compensation at a rate not less than one and one-half times the basic rate of pay for all hours worked in excess of forty hours in such workweek.

(2) Violation; liability for unpaid wages; liquidated damages. In the event of any violation of the clause set forth in paragraph (a)(1) of this section the contractor and any subcontractor responsible therefore shall be liable for the unpaid wages. In addition, such contractor and subcontractor shall be liable to the United States (in the case of work done under contract for the District of Columbia or a territory, to such District or to such territory), for liquidated damages. Such liquidated damages shall be computed with respect to each individual laborer or mechanic, including watchmen and guards, employed in violation of the clause set forth in paragraph (a)(1) of this section, in the sum of $10 for each calendar day on which such individual was required or permitted to work in excess of the standard workweek of forty hours without payment of the overtime wages required by the clause set forth in paragraph (a)(1) of this section.

(3) Withholding for unpaid wages and liquidated damages. The subrecipient**,** upon written request of the EPA Award Official or an authorized representative of the Department of Labor, shall withhold or cause to be withheld, from any moneys payable on account of work performed by the contractor or subcontractor under any such contract or any other Federal contract with the same prime contractor, or any other federally-assisted contract subject to the Contract Work Hours and Safety Standards Act, which is held by the same prime contractor, such sums as may be determined to be necessary to satisfy any liabilities of such contractor or subcontractor for unpaid wages and liquidated damages as provided in the clause set forth in paragraph (b)(2) of this section.

(4) Subcontracts. The contractor or subcontractor shall insert in any subcontracts the clauses set forth in paragraph (a)(1) through (4) of this section and also a clause requiring the subcontractors to include these clauses in any lower tier subcontracts. The prime contractor shall be responsible for compliance by any subcontractor or lower tier subcontractor with the clauses set forth in paragraphs (a)(1) through (4) of this section.

(b) In addition to the clauses contained in Item 3, above, in any contract subject only to the Contract Work Hours and Safety Standards Act and not to any of the other statutes cited in 29 CFR 5.1, the Subrecipient shall insert a clause requiring that the contractor or subcontractor shall maintain payrolls and basic payroll records during the course of the work and shall preserve them for a period of three years from the completion of the contract for all laborers and mechanics, including guards and watchmen, working on the contract. Such records shall contain the name and address of each such employee, social security number, correct classifications, hourly rates of wages paid, daily and weekly number of hours worked, deductions made, and actual wages paid. Further, the Subrecipient shall insert in any such contract a clause providing hat the records to be maintained under this paragraph shall be made available by the contractor or subcontractor for inspection, copying, or transcription by authorized representatives of the (write the name of agency) and the Department of Labor, and the contractor or subcontractor will permit such representatives to interview employees during working hours on the job.

STATE REVOLVING FUND LOAN PROGRAM

Loan Recipient's Requirements

Davis-Bacon Act Wage Determination

The Loan Recipient must ensure the bidder is in compliance with the Davis-Bacon Act as outlined below. Additionally, ten (10) days prior to the scheduled bid opening date, the wage rates need to be checked to ensure they have not changed.

The Davis-Bacon Act as amended, requires that each contract over $2,000 to which the United States or the District of Columbia is a party for the construction, alteration, or repair of public buildings or public works shall contain a clause setting forth the minimum wages to be paid to various classes of laborers and mechanics employed under the contract. Under the provisions of the Act, contractors or their subcontractors are to pay workers employed directly upon the site of the work no less than the locally prevailing wages and fringe benefits paid on projects of a similar character. The Davis-Bacon Act directs the Secretary of Labor to determine such local prevailing wage rates.

The specifications must incorporate a clause stating that the current Davis-Bacon wage rate is required **(**with the Davis-Bacon links and information).

The Bid Advertisement **must include** a clause that the **Davis-Bacon wage rates** are a requirement. (Refer to the ADVERTISEMENT FOR BIDS EXAMPLE – DBE, ARRA)

If modifications to the existing **wage rates** occur **ten (10) days** prior to the Bid Opening Date, the Loan Recipient **must** incorporate the proper **wage rates** into the plans and specifications by Addendum. All Bidders **must** be informed that this addendum **must** be incorporated into the plans and specifications that they have received.

However, if these modifications occur **less than ten (10) days** prior to the Bid Opening Date, these modifications **shall be effective unless** the agency **finds** that there is not a reasonable time still available before the Bid Opening to notify bidders of the modifications. (A report of this **finding** shall be inserted in the contract file.)

The **wage determination** (including any additional **classifications** and **wage rates** conformed) **and** a Davis-Bacon poster (WH-1321) **must be posted on the work site at all times** by the contractor and its subcontractors in a prominent and accessible place where it can be easily seen. The WH-1321 poster **may be obtained at no charge** from offices of the Wage and Hour Division.

With each **pay estimate** submitted, the contractors **must** certify that workers have been paid the current prevailing wage rates for each classification according to the Davis-Bacon wage rate schedule currently in effect for this project.

The loan recipients **must keep a file** in which all documentation **must be filed** for the current classifications and wage rates (under the Davis-Bacon Act) for the construction of their projects. This file must be kept for three (3) years after the project is completed and **will** be subject to audit by the State of Tennessee and the Environmental Protection Agency (EPA).

Wage Determinations

A "wage determination" is the listing of wage rates and fringe benefit rates for each classification of laborers and mechanics which the Administrator of the Wage and Hour Division of the U.S. Department of Labor has determined to be prevailing in a given area for a particular type of construction (e.g., building, heavy, highway, or residential).

Extensions of Wage Determinations

When a general wage determination has not been awarded within 90 days after bid opening, the head of the contracting/assisting agency may request an extension of the 90 day period from the Wage and Hour Administrator. When, due to unavoidable circumstances, a project wage determination expires before award but after bid opening, the head of the contracting/assisting agency may request an extension of the expiration date of the project wage determination in the bid specifications instead of issuing a new wage determination.

Extension requests should be supported by a written finding including a brief statement of the factual support, that extension of the expiration date of the determination is necessary and proper in the public interest to prevent injustice or undue hardship or to avoid serious impairment in the conduct of Government business.

The Administrator of the Wage and Hour Division of the U.S. Department of Labor will either grant or deny the request for an extension after consideration of all the circumstances, including an examination to determine if the previously issued rates remain prevailing. If a request for the extension of a project wage determination is denied, a new wage determination will be issued to replace an expired project wage determination.

Additional information concerning the Davis-Bacon Act and current wage rate determinations can be obtained at the following sites: www.gpo.gov/davisbacon/referencemat.html and www.wdol.gov/ .

Wage Rate Requirements Under FY 2010 Appropriations

3. Contract and Subcontract provisions.

(a) The Recipient shall insure that the subrecipient(s) shall insert in full in any contract in excess of $2,000 which is entered into for the actual construction, alteration and/or repair, including painting and decorating, of a treatment work under the CWSRF or a construction project under the DWSRF financed in whole or in part from Federal funds or in accordance with guarantees of a Federal agency or financed from funds obtained by pledge of any contract of a Federal agency to make a loan, grant or annual contribution (except where a different meaning is expressly indicated), and which is subject to the labor standards provisions of any of the acts listed in § 5.1 or the FY 2010 appropriation , the following clauses:

(1) Minimum wages.

(i) All laborers and mechanics employed or working upon the site of the work will be paid unconditionally and not less often than once a week, and without subsequent deduction or rebate on any account (except such payroll deductions as are permitted by regulations issued by the Secretary of Labor under the Copeland Act (29 CFR part 3)), the full amount of wages and bona fide fringe benefits (or cash equivalents thereof) due at time of payment computed at rates not less than those contained in the wage determination of the Secretary of Labor which is attached hereto and made a part hereof, regardless of any contractual relationship which may be alleged to exist between the contractor and such laborers and mechanics.

Contributions made or costs reasonably anticipated for bona fide fringe benefits under section 1(b)(2) of the Davis-Bacon Act on behalf of laborers or mechanics are considered wages paid to such laborers or mechanics, subject to the provisions of paragraph (a)(1)(iv) of this section; also, regular contributions made or costs incurred for more than a weekly period (but not less often than quarterly) under plans, funds, or programs which cover the particular weekly period, are deemed to be constructively made or incurred during such weekly period. Such laborers and mechanics shall be paid the appropriate wage rate and fringe benefits on the wage determination for the classification of work actually performed, without regard to skill, except as provided in §

5.5(a)(4). Laborers or mechanics performing work in more than one classification may be compensated at the rate specified for each classification for the time actually worked therein: Provided, That the employer's payroll records accurately set forth the time spent in each classification in which work is performed. The wage determination (including any additional classification and wage rates conformed under paragraph (a)(1)(ii) of this section) and the Davis-Bacon poster (WH-1321) shall be posted at all times by the contractor and its subcontractors at the site of the work in a prominent and accessible place where it can be easily seen by the workers.

Subrecipients may obtain wage determinations from the U.S. Department of Labor's web site, www.dol.gov.

(ii)(A) The subrecipient(s), on behalf of EPA, shall require that any class of laborers or mechanics, including helpers, which is not listed in the wage determination and which is to be employed under the contract shall be classified in conformance with the wage determination. The State award official shall approve a request for an additional classification and wage rate and fringe benefits therefore only when the following criteria have been met:

(1) The work to be performed by the classification requested is not performed by a classification in the wage determination; and

(2) The classification is utilized in the area by the construction industry; and

(3) The proposed wage rate, including any bona fide fringe benefits, bears a reasonable relationship to the wage rates contained in the wage determination.

(B) If the contractor and the laborers and mechanics to be employed in the classification (if known), or their representatives, and the subrecipient(s) agree on the classification and wage rate (including the amount designated for fringe benefits where appropriate), documentation of the action taken and the request, including the local wage determination shall be sent by the subrecipient (s) to the State award official. The State award official will transmit the request, to the Administrator of the Wage and Hour Division, Employment Standards Administration, U.S. Department of Labor, Washington, DC 20210 and to the EPA DB Regional Coordinator concurrently. The Administrator, or an authorized representative, will approve, modify, or disapprove every additional classification request within 30 days of receipt and so advise the State award official or will notify the State award official within the 30-day period that additional time is necessary.

(C) In the event the contractor, the laborers or mechanics to be employed in the classification or their representatives, and the subrecipient(s) do not agree on the proposed classification and wage rate (including the amount designated for fringe benefits, where appropriate), the award official shall refer the request and the local wage determination, including the views of all interested parties and the recommendation of the State award official, to the Administrator for determination. The request shall be sent to the EPA DB Regional Coordinator concurrently. The Administrator, or an authorized representative, will issue a determination within 30 days of receipt of the request and so advise the contracting officer or will notify the contracting officer within the 30-day period that additional time is necessary.

(D) The wage rate (including fringe benefits where appropriate) determined pursuant to paragraphs (a)(1)(ii)(B) or (C) of this section, shall be paid to all workers performing work in the classification under this contract from the first day on which work is performed in the classification.

(iii) Whenever the minimum wage rate prescribed in the contract for a class of laborers or mechanics includes a fringe benefit which is not expressed as an hourly rate, the

contractor shall either pay the benefit as stated in the wage determination or shall pay another bona fide fringe benefit or an hourly cash equivalent thereof.

(iv) If the contractor does not make payments to a trustee or other third person, the contractor may consider as part of the wages of any laborer or mechanic the amount of any costs reasonably anticipated in providing bona fide fringe benefits under a plan or program, Provided, That the Secretary of Labor has found, upon the written request of the contractor, that the applicable standards of the Davis-Bacon Act have been met. The Secretary of Labor may require the contractor to set aside in a separate account assets for the meeting of obligations under the plan or program.

(2) Withholding. The subrecipient(s), shall upon written request of the EPA Award Official or an authorized representative of the Department of Labor, withhold or cause to be withheld from the contractor under this contract or any other Federal contract with the same prime contractor, or any other federally-assisted contract subject to Davis-Bacon prevailing wage requirements, which is held by the same prime contractor, so much of the accrued payments or advances as may be considered necessary to pay laborers and mechanics, including apprentices, trainees, and helpers, employed by the contractor or any subcontractor the full amount of wages required by the contract. In the event of failure to pay any laborer or mechanic, including any apprentice, trainee, or helper, employed or working on the site of the work, all or part of the wages required by the contract, the (Agency) may, after written notice to the contractor, sponsor, applicant, or owner, take such action as may be necessary to cause the suspension of any further payment, advance, or guarantee of funds until such violations have ceased.

(3) Payrolls and basic records.

(i) Payrolls and basic records relating thereto shall be maintained by the contractor during the course of the work and preserved for a period of three years thereafter for all laborers and mechanics working at the site of the work. Such records shall contain the name, address, and social security number of each such worker, his or her correct classification, hourly rates of wages paid (including rates of contributions or costs anticipated for bona fide fringe benefits or cash equivalents thereof of the types described in section 1(b)(2)(B) of the Davis-Bacon Act), daily and weekly number of hours worked, deductions made and actual wages paid. Whenever the Secretary of Labor has found under 29 CFR 5.5(a)(1)(iv) that the wages of any laborer or mechanic include the amount of any costs reasonably anticipated in providing benefits under a plan or program described in section 1(b)(2)(B) of the Davis-Bacon Act, the contractor shall maintain records which show that the commitment to provide such benefits is enforceable, that the plan or program is financially responsible, and that the plan or program has been communicated in writing to the laborers or mechanics affected, and records which show the costs anticipated or the actual cost incurred in providing such benefits. Contractors employing apprentices or trainees under approved programs shall maintain written evidence of the registration of apprenticeship programs and certification of trainee programs, the registration of the apprentices and trainees, and the ratios and wage rates prescribed in the applicable programs.

(ii)(A) The contractor shall submit weekly, for each week in which any contract work is performed, a copy of all payrolls to the subrecipient, that is, the entity that receives the sub-grant or loan from the State capitalization grant recipient. Such documentation shall be available on request of the State recipient or EPA. As to each payroll copy received, the subrecipient shall provide written confirmation in a form satisfactory to the State indicating whether or not the project is in compliance with the requirements of 29 CFR 5.5(a)(1) based on the most recent payroll copies for the specified week. The payrolls shall set out accurately and completely all of the information required to be maintained under 29 CFR 5.5(a)(3)(i), except that full social security numbers and home addresses shall not be included on the weekly payrolls. Instead the payrolls shall only need to include an individually identifying number for each employee (e.g.,

the last four digits of the employee's social security number). The required weekly payroll information may be submitted in any form desired. Optional Form WH-347 is available for this purpose from the Wage and Hour Division Web site at http://www.dol.gov/esa/whd/forms/wh347instr.htm or its successor site. The prime contractor is responsible for the submission of copies of payrolls by all subcontractors. Contractors and subcontractors shall maintain the full social security number and current address of each covered worker, and shall provide them upon request to the subrecipient(s) for transmission to the State or EPA if requested by EPA , the State, the contractor, or the Wage and Hour Division of the Department of Labor for purposes of an investigation or audit of compliance with prevailing wage requirements. It is not a violation of this section for a prime contractor to require a subcontractor to provide addresses and social security numbers to the prime contractor for its own records, without weekly submission to the subrecipient(s).

(B) Each payroll submitted shall be accompanied by a "Statement of Compliance," signed by the contractor or subcontractor or his or her agent who pays or supervises the payment of the persons employed under the contract and shall certify the following:

(1) That the payroll for the payroll period contains the information required to be provided under § 5.5 (a)(3)(ii) of Regulations, 29 CFR part 5, the appropriate information is being maintained under § 5.5 (a)(3)(i) of Regulations, 29 CFR part 5, and that such information is correct and complete;

(2) That each laborer or mechanic (including each helper, apprentice, and trainee) employed on the contract during the payroll period has been paid the full weekly wages earned, without rebate, either directly or indirectly, and that no deductions have been made either directly or indirectly from the full wages earned, other than permissible deductions as set forth in Regulations, 29 CFR part 3;

(3) That each laborer or mechanic has been paid not less than the applicable wage rates and fringe benefits or cash equivalents for the classification of work performed, as specified in the applicable wage determination incorporated into the contract.

(C) The weekly submission of a properly executed certification set forth on the reverse side of Optional Form WH-347 shall satisfy the requirement for submission of the "Statement of Compliance" required by paragraph (a)(3)(ii)(B) of this section.

(D) The falsification of any of the above certifications may subject the contractor or subcontractor to civil or criminal prosecution under section 1001 of title 18 and section 231 of title 31 of the United States Code.

(iii) The contractor or subcontractor shall make the records required under paragraph (a)(3)(i) of this section available for inspection, copying, or transcription by authorized representatives of the State, EPA or the Department of Labor, and shall permit such representatives to interview employees during working hours on the job. If the contractor or subcontractor fails to submit the required records or to make them available, the Federal agency or State may, after written notice to the contractor, sponsor, applicant, or owner, take such action as may be necessary to cause the suspension of any further payment, advance, or guarantee of funds. Furthermore, failure to submit the required records upon request or to make such records available may be grounds for debarment action pursuant to 29 CFR 5.12.

(4) Apprentices and trainees--

(i) Apprentices. Apprentices will be permitted to work at less than the predetermined rate for the work they performed when they are employed pursuant to and individually registered in a bona fide apprenticeship program registered with the U.S. Department of Labor, Employment and Training Administration, Office of Apprenticeship Training, Employer and Labor Services, or

with a State Apprenticeship Agency recognized by the Office, or if a person is employed in his or her first 90 days of probationary employment as an apprentice in such an apprenticeship program, who is not individually registered in the program, but who has been certified by the Office of Apprenticeship Training, Employer and Labor Services or a State Apprenticeship Agency (where appropriate) to be eligible for probationary employment as an apprentice. The allowable ratio of apprentices to journeymen on the job site in any craft classification shall not be greater than the ratio permitted to the contractor as to the entire work force under the registered program. Any worker listed on a payroll at an apprentice wage rate, who is not registered or otherwise employed as stated above, shall be paid not less than the applicable wage rate on the wage determination for the classification of work actually performed. In addition, any apprentice performing work on the job site in excess of the ratio permitted under the registered program shall be paid not less than the applicable wage rate on the wage determination for the work actually performed. Where a contractor is performing construction on a project in a locality other than that in which its program is registered, the ratios and wage rates (expressed in percentages of the journeyman's hourly rate) specified in the contractor's or subcontractor's registered program shall be observed. Every apprentice must be paid at not less than the rate specified in the registered program for the apprentice's level of progress, expressed as a percentage of the journeymen hourly rate specified in the applicable wage determination. Apprentices shall be paid fringe benefits in accordance with the provisions of the apprenticeship program. If the

apprenticeship program does not specify fringe benefits, apprentices must be paid the full amount of fringe benefits listed on the wage determination for the applicable classification. If the Administrator determines that a different practice prevails for the applicable apprentice classification, fringes shall be paid in accordance with that determination. In the event the Office of Apprenticeship Training, Employer and Labor Services, or a State Apprenticeship Agency recognized by the Office, withdraws approval of an apprenticeship program, the contractor will no longer be permitted to utilize apprentices at less than the applicable predetermined rate for the work performed until an acceptable program is approved.

(ii) Trainees. Except as provided in 29 CFR 5.16, trainees will not be permitted to work at less than the predetermined rate for the work performed unless they are employed pursuant to and individually registered in a program which has received prior approval, evidenced by formal certification by the U.S. Department of Labor, Employment and Training Administration. The ratio of trainees to journeymen on the job site shall not be greater than permitted under the plan approved by the Employment and Training Administration. Every trainee must be paid at not less than the rate specified in the approved program for the trainee's level of progress, expressed as a percentage of the journeyman hourly rate specified in the applicable wage determination. Trainees shall be paid fringe benefits in accordance with the provisions of the trainee program. If the trainee program does not mention fringe benefits, trainees shall be paid the full amount of fringe benefits listed on the wage determination unless the Administrator of the Wage and Hour Division determines that there is an apprenticeship program associated with the corresponding journeyman wage rate on the wage determination which provides for less than full fringe benefits for apprentices. Any employee listed on the payroll at a trainee rate who is not registered and participating in a training plan approved by the Employment and Training Administration shall be paid not less than the applicable wage rate on the wage determination for the classification of work actually performed. In addition, any trainee performing work on the job site in excess of the ratio permitted under the registered program shall be paid not less than the applicable wage rate on the wage determination for the work actually performed. In the event the Employment and Training Administration withdraws approval of a training program, the contractor will no longer be permitted to utilize trainees at less than the applicable predetermined rate for the work performed until an acceptable program is approved.

(iii) Equal employment opportunity. The utilization of apprentices, trainees and journeymen under this part shall be in conformity with the equal employment opportunity requirements of Executive Order 11246, as amended, and 29 CFR part 30.

(5) Compliance with Copeland Act requirements. The contractor shall comply with the requirements of 29 CFR part 3, which are incorporated by reference in this contract.

(6) Subcontracts. The contractor or subcontractor shall insert in any subcontracts the clauses contained in 29 CFR 5.5(a)(1) through (10) and such other clauses as the EPA determines may by appropriate, and also a clause requiring the subcontractors to include these clauses in any lower tier subcontracts. The prime contractor shall be responsible for

the compliance by any subcontractor or lower tier subcontractor with all the contract clauses in 29 CFR 5.5.

(7) Contract termination; debarment. A breach of the contract clauses in 29 CFR 5.5 may be grounds for termination of the contract, and for debarment as a contractor and a subcontractor as provided in 29 CFR 5.12.

(8) Compliance with Davis-Bacon and Related Act requirements. All rulings and interpretations of the Davis-Bacon and Related Acts contained in 29 CFR parts 1, 3, and 5 are herein incorporated by reference in this contract.

(9) Disputes concerning labor standards. Disputes arising out of the labor standards provisions of this contract shall not be subject to the general disputes clause of this contract. Such disputes shall be resolved in accordance with the procedures of the Department of Labor set forth in 29 CFR parts 5, 6, and 7. Disputes within the meaning of this clause include disputes between the contractor (or any of its subcontractors) and Subrecipient(s), State, EPA, the U.S. Department of Labor, or the employees or their representatives.

(10) Certification of eligibility.

(i) By entering into this contract, the contractor certifies that neither it (nor he or she) nor any person or firm who has an interest in the contractor's firm is a person or firm ineligible to be awarded Government contracts by virtue of section 3(a) of the Davis-Bacon Act or 29 CFR 5.12(a)(1).

(ii) No part of this contract shall be subcontracted to any person or firm ineligible for award of a Government contract by virtue of section 3(a) of the Davis-Bacon Act or 29 CFR 5.12(a)(1).

(iii) The penalty for making false statements is prescribed in the U.S. Criminal Code, 18 U.S.C. 1001.

4. **Contract Provision for Contracts in Excess of $100,000.**

(a) Contract Work Hours and Safety Standards Act. The subrecipient shall insert the following clauses set forth in paragraphs (a)(1), (2), (3), and (4) of this section in full in any contract in an amount in excess of $100,000 and subject to the overtime provisions of the Contract Work Hours and Safety Standards Act. These clauses shall be inserted in addition to the clauses required by Item 3, above or 29 CFR 4.6. As used in this paragraph, the terms laborers and mechanics include watchmen and guards.

(1) Overtime requirements. No contractor or subcontractor contracting for any part of the contract work which may require or involve the employment of laborers or mechanics shall require or permit any such laborer or mechanic in any workweek in which he or she is employed on such work to work in excess of forty hours in such workweek unless such

laborer or mechanic receives compensation at a rate not less than one and one-half times the basic rate of pay for all hours worked in excess of forty hours in such workweek.

(2) Violation; liability for unpaid wages; liquidated damages. In the event of any violation of the clause set forth in paragraph (a)(1) of this section the contractor and any subcontractor responsible therefore shall be liable for the unpaid wages. In addition, such contractor and subcontractor shall be liable to the United States (in the case of work done under contract for the District of Columbia or a territory, to such District or to such territory), for liquidated damages. Such liquidated damages shall be computed with respect to each individual laborer or mechanic, including watchmen and guards, employed in violation of the clause set forth in paragraph (a)(1) of this section, in the sum of $10 for each calendar day on which such individual was required or permitted to work in excess of the standard workweek of forty hours without payment of the overtime wages required by the clause set forth in paragraph (a)(1) of this section.

(3) Withholding for unpaid wages and liquidated damages. The subrecipient**,** upon written request of the EPA Award Official or an authorized representative of the Department of Labor, shall withhold or cause to be withheld, from any moneys payable on account of work performed by the contractor or subcontractor under any such contract or any other Federal contract with the same prime contractor, or any other federally-assisted contract subject to the Contract Work Hours and Safety Standards Act, which is held by the same prime contractor, such sums as may be determined to be necessary to satisfy any liabilities of such contractor or subcontractor for unpaid wages and liquidated damages as provided in the clause set forth in paragraph (b)(2) of this section.

(4) Subcontracts. The contractor or subcontractor shall insert in any subcontracts the clauses set forth in paragraph (a)(1) through (4) of this section and also a clause requiring the subcontractors to include these clauses in any lower tier subcontracts. The prime contractor shall be responsible for compliance by any subcontractor or lower tier subcontractor with the clauses set forth in paragraphs (a)(1) through (4) of this section.

(b) In addition to the clauses contained in Item 3, above, in any contract subject only to the Contract Work Hours and Safety Standards Act and not to any of the other statutes cited in 29 CFR 5.1, the Subrecipient shall insert a clause requiring that the contractor or subcontractor shall maintain payrolls and basic payroll records during the course of the work and shall preserve them for a period of three years from the completion of the contract for all laborers and mechanics, including guards and watchmen, working on the contract. Such records shall contain the name and address of each such employee, social security number, correct classifications, hourly rates of wages paid, daily and weekly number of hours worked, deductions made, and actual wages paid. Further, the Subrecipient shall insert in any such contract a clause providing hat the records to be maintained under this paragraph shall be made available by the contractor or subcontractor for inspection, copying, or transcription by authorized representatives of the (write the name of agency) and the Department of Labor, and the contractor or subcontractor will permit such representatives to interview employees during working hours on the job.

STATE REVOLVING FUND LOAN PROGRAM

Loan Recipient's and Contractor's Guidance

FY2010 and After

Tracking and Reporting

For tracking and reporting purposes, the **Loan Recipient** is responsible for the following:

- Ensuring that the Contractor is in compliance with the Davis Bacon provisions of ARRA
- The loan recipients **must keep a file** in which all documentation **must be stored** for the current classifications and wage rates (under the Davis-Bacon Act) for the construction of their projects. This file must be kept for three (3) years after the project is completed and **will** be subject to audit by the State of Tennessee and the Environmental Protection Agency (EPA).
- Any additional tracking and reporting requirements from EPA

For tracking and reporting purposes, the **Contractor** is responsible for the following:

- Achieving and maintaining compliance with the Davis Bacon provisions of ARRA
- Submitting with each **pay estimate** a certification stating that workers have been paid the current prevailing wage rates for each classification according to the Davis-Bacon wage rate schedule currently in effect for this project
- Any additional tracking and reporting requirements from EPA

Please contact Dr. Bagher Sami, Administrative Section Manager for the SRF Loan Program, at 615-532-0501 or bagher.sami@tn.gov to obtain details.

NOTICE

THIS ENTITY IS A RECIPIENT OF STATE AND FEDERAL FUNDS. IF YOU HAVE KNOWLEDGE OF ANY ACTIVITY WHICH YOU CONSIDER TO BE ILLEGAL, IMPROPER, OR WASTEFUL, PLEASE CALL THE STATE COMPTROLLER'S TOLL-FREE HOTLINE:

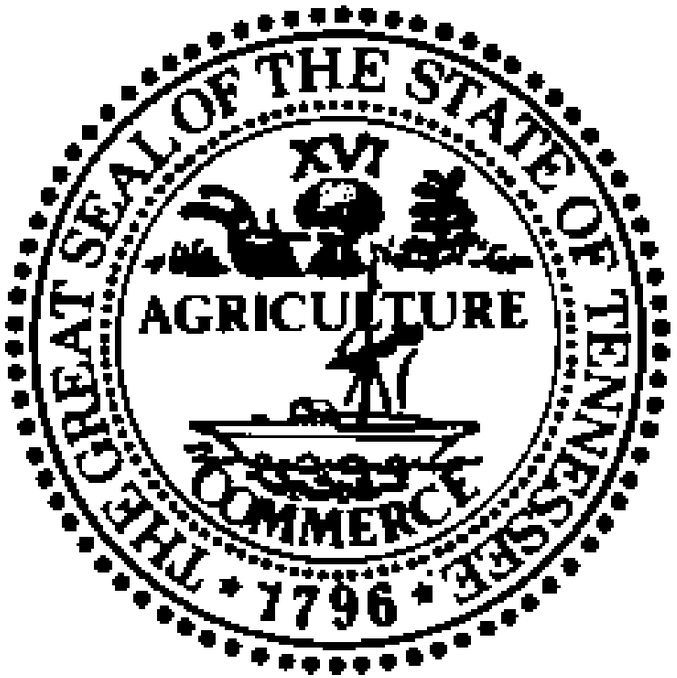

1-800-232-5454

TENNESSEE DEPARTMENT OF ENVIRONMENT AND CONSERVATION
Division of Water Resources
William R. Snodgrass Tennessee Tower, 312 Rosa L. Parks Avenue, 11th Floor, Nashville, Tennessee 37243
1-888-891-8332 (TDEC)

Notice of Intent (NOI) for General NPDES Permit for Stormwater Discharges from Construction Activities (TNR100000)

Site or Project Name:		**Existing NPDES Tracking Number: TNR**
Street Address or Location:		Start date:
		Estimated end date:
Site Activity Description:		Latitude (dd.dddd):
		Longitude (dd.dddd):
County(ies):	MS4 Jurisdiction:	Acres Disturbed:
		Total Acres:

Does a topographic map show dotted or solid blue lines ☐ and/or wetlands ☐ on or adjacent to the construction site?
If wetlands are located on-site and may be impacted, attach wetlands delineation report.
If an Aquatic Resource Alteration Permit has been obtained for this site, what is the permit number? ARAP permit No.:

Receiving waters:

Attach the SWPPP with the NOI	☐ SWPPP Attached	Attach a site location map	☐ Map Attached

Site Owner/Developer Entity (*Primary Permittee*)**:** (person, company, or legal entity that has operational or design control over construction plans and specifications):

Site Owner/Developer Signatory (V.P. level/higher - signs certification below): (individual responsible for site):		Signatory's Title or Position (V.P. level/higher - signs certification below):	
Mailing Address:		City:	State: / Zip:
Phone: ( )	Fax: ( )	E-mail:	

Optional Contact:		Title or Position:	
Mailing Address:		City:	State: / Zip:
Phone: ( )	Fax: ( )	E-mail:	

Owner or Developer Certification (must be signed by president, vice-president or equivalent, or ranking elected official) (Primary Permittee)

I certify under penalty of law that this document and all attachments were prepared by me, or under my direction or supervision. The submitted information is to the best of my knowledge and belief, true, accurate, and complete. I am aware that there are significant penalties for submitting false information, including the possibility of fine and imprisonment. As specified in Tennessee Code Annotated Section 39-16-702(a)(4), this declaration is made under penalty of perjury.

Owner or Developer Name; (print or type)	Signature:	Date:

Contractor(s) Certification (must be signed by president, vice-president or equivalent, or ranking elected official) (Secondary Permittee)

I certify under penalty of law that I have reviewed this document, any attachments, and the SWPPP referenced above. Based on my inquiry of the construction site owner/developer identified above and/or my inquiry of the person directly responsible for assembling this NOI and SWPPP, I believe the information submitted is accurate. I am aware that this NOI, if approved, makes the above-described construction activity subject to NPDES permit number TNR100000, and that certain of my activities on-site are thereby regulated.

Contractor company name (print or type):			
Contractor signatory (print/type): (V.P. level or higher)		Signature:	Date:
Mailing Address:		City: / State:	Zip:
Phone: ( )	Fax: ( )	E-mail:	

Other Contractor company name (print or type):			
Other Contractor signatory (print/type): (V.P. level or higher)		Signature:	Date:
Mailing Address:		City: / State:	Zip:
Phone: ( )	Fax: ( )	E-mail:	

OFFICIAL STATE USE ONLY

Received Date:	Reviewer:	Field Office:	Permit Number **TNR**	Exceptional TN Water:
Fee(s):	T & E Aquatic Flora and Fauna:		Impaired Receiving Stream:	Notice of Coverage Date:

(Continued on reverse)

Notice of Intent (NOI) for General NPDES Permit for Stormwater Discharges from Construction Activities (TNR100000)

Purpose of this form A completed notice of intent (NOI) must be submitted to obtain coverage under the Tennessee General NPDES Permit for Discharges of Stormwater Associated with Construction Activity (permit). **Requesting coverage under this permit means that an applicant has obtained and examined a copy of this permit, and thereby acknowledges applicant's claim of ability to be in compliance with permit terms and conditions.** This permit is required for stormwater discharge(s) from construction activities including clearing, grading, filling and excavating (including borrow pits) of one or more acres of land. This form should be submitted at least 30 days prior to the commencement of land disturbing activities, or no later than 48 hours prior to when a new operator assumes operational control over site specifications or commences work at the site.

Permit fee (see table below) must accompany the NOI and is based on total acreage to be disturbed by an entire project, including any associated construction support activities (e.g. equipment staging yards, material storage areas, excavated material disposal areas, borrow or waste sites). There is no fee for sites less than 1 acre.

Acres Disturbed	= or > 150 acres	= or > 50 < 150 acres	= or > 5 < 50 acres	= or > 1 < 5 acres
Fee	$7,500	$4,000	$1,000	$250

Who must submit the NOI form? Per Section 2 of the permit, all site operators must submit an NOI form. "Operator" for the purpose of this permit and in the context of stormwater associated with construction activity means any person associated with a construction project who meets either or both of the following two criteria: (1) The person has operational or design control over construction plans and specifications, including the ability to make modifications to those plans and specifications. This person is typically the owner or developer of the project or a portion of the project (e.g. subsequent builder), or the person that is the current land owner of the construction site. This person is considered the primary permittee; or (2) The person has day-to-day operational control of those activities at a project which are necessary to ensure compliance with a SWPPP for the site or other permit conditions. This person is typically a contractor or a commercial builder who is hired by the primary permittee, and is considered a secondary permittee.

Owners, developers and all contractors that meet the definition of the operator in subsection 2.2 of the permit shall apply for permit coverage on the same NOI, insofar as possible. After permit coverage has been granted to the primary permittee, any subsequent NOI submittals must include the site's previously assigned permit tracking number and the project name. The comprehensive site-specific SWPPP shall be prepared in accordance with the requirements of part 3 of the permit and must be submitted with the NOI unless the NOI being submitted is to only add a contractor (secondary permittee) to an existing coverage.

Notice of Coverage The division will review the NOI for completeness and accuracy and prepare a notice of coverage (NOC). Stormwater discharge from the construction site is authorized as of the effective date of the NOC.

Complete the form Type or print clearly, using ink and not markers or pencil. Answer each item or enter "NA," for not applicable, if a particular item does not fit the circumstances or characteristics of your construction site or activity. If you need additional space, attach a separate piece of paper to the NOI form. **The NOI will be considered incomplete without a permit fee, a map, and the SWPPP.**

Describe and locate the project Use the legal or official name of the construction site. If a construction site lacks street name or route number, give the most accurate geographic information available to describe the location (reference to adjacent highways, roads and structures; e.g. intersection of state highways 70 and 100). Latitude and longitude (expressed in decimal degrees) of the center of the site can be located on USGS quadrangle maps. The quadrangle maps can be obtained at the USGS World Wide Web site: http://www.usgs.gov/; latitude and longitude information can be found at numerous other web sites. Attach a copy of a portion of a 7.5 minute quad map, showing location of site, with boundaries at least one mile outside the site boundaries. Provide estimated starting date of clearing activities and completion date of the project, and an estimate of the number of acres of the site on which soil will be disturbed, including borrow areas, fill areas, stockpiles and the total acres. For linear projects, give location at each end of the construction area.

MS4 Jurisdiction: If this construction site is located within a Municipal Separate Storm Sewer System (MS4), please list name of MS4. A current list of MS4s in Tennessee may be found at http://www.tn.gov/environment/wpc/stormh2o/docs/MS4s_Jan2012.pdf

Give name of the receiving waters Trace the route of stormwater runoff from the construction site and determine the name of the river(s), stream(s), creek(s), wetland(s), lake(s) or any other water course(s) into which the stormwater runoff drains. Note that the receiving water course may or may not be located on the construction site. If the first water body receiving construction site runoff is unnamed ("unnamed tributary"), determine the name of the water body that the unnamed tributary enters.

ARAP permit may be required **If your work will disturb or cause alterations of a stream or wetland, you must obtain an appropriate Aquatic Resource Alteration Permit (ARAP).** If you have a question about the ARAP program or permits, contact your local Environmental Field Office (EFO).

Submitting the form and obtaining more information Note that this form must be signed by the company President, Vice-President, or a ranking elected official in the case of a municipality, for details see subpart 2.5. For more information, contact your local EFO at the toll-free number 1-888-891-8332 (TDEC). Submit the completed NOI form (keep a copy for your records) to the appropriate EFO for the county(ies) where the construction activity is located, addressed to **Attention: Stormwater NOI Processing**.

EFO	**Street Address**	**Zip Code**	**EFO**	**Street Address**	**Zip Code**
Memphis	8383 Wolf Lake Drive, Bartlett	38133-4119	Cookeville	1221 South Willow Ave.	38506
Jackson	1625 Hollywood Drive	38305-4316	Chattanooga	540 McCallie Avenue STE 550	37402-2013
Nashville	711 R S Gass Boulevard	37243	Knoxville	3711 Middlebrook Pike	37921
Columbia	1421 Hampshire Pike	38401	Johnson City	2305 Silverdale Road	37601

TENNESSEE DEPARTMENT OF ENVIRONMENT AND CONSERVATION (TDEC)
Division of Water Resources
William R. Snodgrass Tennessee Tower, 312 Rosa L. Parks Avenue, 11th Floor, Nashville, Tennessee 37243
1-888-891-TDEC (8332)

Notice of Termination (NOT) for General NPDES Permit for Stormwater Discharges from Construction Activities (CGP)

This form is required to be submitted when requesting termination of coverage from the CGP. The purpose of this form is to notify the TDEC that either all stormwater discharges associated with construction activity from the portion of the identified facility where you, as an operator, have ceased or have been eliminated; or you are no longer an operator at the construction site. Submission of this form shall in no way relieve the permittee of permit obligations required prior to submission of this form. Please submit this form to the local WPC Environmental Field Office (EFO) address (see table below). For more information, contact your local EFO at the toll-free number 1-888-891-8332 (TDEC).

Type or print clearly, using ink.

Site or Project Name:	**NPDES Tracking Number: TNR**
Street Address or Location:	County(ies):

Name of Permittee Requesting Termination of Coverage:			
Permittee Contact Name:	Title or Position:		
Mailing Address:	City:	State:	Zip:
Phone: ( )	E-mail:		

Check the reason(s) for termination of permit coverage:

☐	Stormwater discharge associated with construction activity is no longer occurring and the permitted area has a uniform 70% permanent vegetative cover OR has equivalent measures such as rip rap or geotextiles, in areas not covered with impervious surfaces.
☐	You are no longer the operator at the construction site (i.e., termination of site-wide, primary or secondary permittee coverage).

Certification and Signature: (must be signed by president, vice-president or equivalent ranking elected official)

I certify under penalty of law that either: (a) all stormwater discharges associated with construction activity from the portion of the identified facility where I was an operator have ceased or have been eliminated or (b) I am no longer an operator at the construction site. I understand that by submitting this notice of termination, I am no longer authorized to discharge stormwater associated with construction activity under this general permit, and that discharging pollutants in stormwater associated with construction activity to waters of the United States is unlawful under the Clean Water Act where the discharge is not authorized by a NPDES permit. I also understand that the submittal of this notice of termination does not release an operator from liability for any violations of this permit or the Clean Water Act.

For the purposes of this certification, elimination of stormwater discharges associated with construction activity means that all stormwater discharges associated with construction activities from the identified site that are authorized by a NPDES general permit have been eliminated from the portion of the construction site where the operator had control. Specifically, this means that all disturbed soils at the portion of the construction site where the operator had control have been finally stabilized, the temporary erosion and sediment control measures have been removed, and/or subsequent operators have obtained permit coverage for the site or portions of the site where the operator had control.

I certify under penalty of law that this document and all attachments were prepared by me, or under my direction or supervision. The submitted information is to the best of my knowledge and belief, true, accurate, and complete. I am aware that there are significant penalties for submitting false information, including the possibility of fine and imprisonment. As specified in Tennessee Code Annotated Section 39-16-702(a)(4), this declaration is made under penalty of perjury.

Permittee name (print or type):	Signature:	Date:

EFO	Street Address	Zip Code	EFO	Street Address	Zip Code
Memphis	8383 Wolf Lake Drive, Bartlett, TN	38133	Cookeville	1221 South Willow Ave.	38506
Jackson	1625 Hollywood Drive	38305	Chattanooga	540 McCallie Avenue STE 550	37402
Nashville	711 R S Gass Boulevard	37243	Knoxville	3711 Middlebrook Pike	37921
Columbia	1421 Hampshire Pike	38401	Johnson City	2305 Silverdale Road	37601

CLEAN WATER STATE REVOLVING FUND

IDENTIFICATION SIGN

All plans and specifications for each project approved shall contain provisions for requiring the general contractor to provide identification signs. The signs shall conform to the following basic features:

1. The following diagram shall be used as a design:

CLEAN WATER FOR TENNESSEE

DEPARTMENT OF ENVIRONMENT AND CONSERVATION

GOVERNOR
BILL HASLAM

COMMISSIONER
BOB MARTINEAU

CITY OF

MAYOR

STATE REVOLVING FUND PROJECT

CWSRF LOAN . . . $ _____

2. The sign shall be a 4'0" X 8'0" sheet of exterior grade plywood and shall be built so as to remain erected during the entire construction phase of the project.

3. The background of both sides shall be white. The lettering shall be black and shall be large enough to take advantage of the full size of the plywood. The stars shall be white set on a blue field and surrounded by a white ring placed inside a state map in red with a stripe of white and blue on the right side. The sign shall be bordered by a one-inch blue stripe.

Revised: JANUARY 20, 2011

STATE REVOLVING FUND LOAN PROGRAM

BID PACKAGE SUBMITTAL REQUIREMENTS

PRIOR TO FINAL CONTRACT AWARD by the State Revolving Fund (SRF) Loan Program, the Loan Recipient must prepare and submit a completed Bid Package to the SRF Loan Program for review and **written approval**. An **Authority-to-Award (ATA)** letter from the SRF Loan Program must be obtained prior to the final contract award and the initiation of construction activities.

A completed Bid Package submittal consists of the following:

1. A copy of the **Advertisement for Bids** appearing in a local or major regional newspaper or the Dodge Report (40 CFR 31.36 (d)(2)(ii)(A)). *The project must be advertised for a minimum of 14 days prior to the bid opening.*
2. An original copy of either the **Award Resolution or the minutes** from the meeting of the governing body (or a certified copy of either) that tentatively awards the contract(s) to the lowest, responsible, responsive bidder(s)
3. A **certified bid tabulation** stamped and signed by the consulting engineer reviewing the bids
4. A copy of the **signed Bid Proposal** of the apparent successful bidder
5. **Equal Employment Opportunity (EEO) documentation** signed by the apparent successful bidder
6. **Bid Bond with Power of Attorney** (40 CFR 31.36(h))
7. Signed and dated U.S. EPA (or other agency) **Contractor Debarment Form**, such as the U.S. Environmental Protection Agency Certification Regarding Debarment, Suspension and Other Responsibility Matters
8. An original, notarized certification of publication (**Publisher's Affidavit**) signed by the editor of the newspaper
9. Copies of a minimum of 10 **certified letters** and "**Return Receipt Requested"** forms sent to potential **Disadvantaged Business Enterprises (DBE)** subcontractors, supplies vendors, service providers, and/or equipment vendors
10. A copy of the current **Davis-Bacon** wage rates used on this project (Davis-Bacon Act)
11. A completed **Loan Recipient's Certification and Summary** of **DBE** Participation on SRF Projects **(**40 CFR 31.36 (e)(2)(i through vi))
12. If **DBE** participation was obtained,
    - **Prime Contractor's Notice Letter** for EPA Form 6100-2
    - **EPA Form 6100-3** completed by Prime Contractor and **DBE Subcontractor(s)**
    - **EPA Form 6100-4** completed by the Prime Contractor
13. If no **DBE** participation was obtained, a "**Good Faith Effort**" letter (See Good Faith Effort Steps at 40 CFR 31.36 (e)(2)(i through vi))
14. Reference documents:
    - **Loan Recipient's Requirements** for Solicitation and Documentation of **DBE** Participation on SRF Projects
    - **Bidder's Requirements** for Solicitation and Documentation of **DBE** Participation on SRF Projects
    - **Loan Recipient's Certification and Summary** of **DBE** Participation on SRF Loan-Funded Projects
    - **Guidance Document** for **DBE** Requirements for SRF loans
15. If applicable, documentation of the justification for not awarding the contract to the lowest bidder if the award is to be made to a bidder other than the low bidder. The justification must indicate why the low bidder is not responsive or responsible and include documentation of any negotiations leading to the determination.
16. Resume of the resident inspector(s)
17. Documentation of the extension of the bid proposal and bid bond expiration dates, if necessary

If the lowest bid received exceeds the amount budgeted for construction in the SRF-approved SRF Loan Budget, the loan recipient must choose only from the following options:

- **Re-allocate** SRF funds through a budget revision. A revised Budget/Re-budget Form must be submitted to the SRF for review and approval if the re-budgeting option is chosen.
- **Provide** additional funds needed to pay the contract from **local funds** or funding source(s) other than the SRF loan
- **Apply** for an **SRF loan increase**. Application for a loan increase will require re-evaluation of the loan recipient's user rates to determine if the anticipated revenues will be sufficient to repay the requested loan increase and fund the additional depreciation. **Principal forgiveness does not apply to loan increases.**
- **Reject** all bids and **re-bid the project**

Please contact Dr. Bagher Sami by telephone at (615) 532-0501 or by e-mail at bagher.sami@tn.gov if you have any questions concerning the contents of the Bid Package submittal for State Revolving Fund projects.

City Letter Head

Dr. Bagher Sami,
Administrative and Financial Section Manager
State Revolving Fund Loan Program
William R. Snodgrass - Tennessee Tower
312 Rosa L. Parks Avenue, 12th Floor
Nashville, Tennessee 37243-1102

RE: Property, Easements, Rights-of-Way Certification
City/County/UD/Authority (xxxx County or xxx and xxxx Counties), Tennessee
Loan No. SRF CWA CGA DWF DWA DGA 200x-xxx
Loan Description: xxxxxxxxx
Contract No. / Name 1 of 2—Contract Description
Contract No. / Name 2 of 2—Contract Description

Dear Dr. Sami:

This letter is to certify that all property, easements, and rights-of-way necessary to construct the projects included in the above-referenced contract are owned (or in the case of right-of-way permitted for the use) by the City/County/UD/Authority. And/or The plant improvements are to be constructed on the same site as our existing facility. Based upon this, no "Site Certificate" is required.

Sincerely,

Authorized Representative, Title

SITE CERTIFICATION

I certify that the applicant, the City of ???, ??? County, the ??? Utility District, the ??? Water/Wastewater/Energy Authority has acquired or has entered into condemnation proceedings for all real property including easements and rights-of-way that are or will be required for the construction (erection, extension, modification, addition), operation, and maintenance of the entire wastewater treatment works funded under loan number SRF/CWA/CGA/DWF/DWA/DGA 200?-???.

I certify that any deeds or documents required to be recorded in order to protect the title of the owner and the interest of the City of ???, ??? County, the ??? Utility District, the ??? Water/Wastewater/Energy Authority have been duly recorded and filed for record wherever necessary.

I further certify that real property including easements required for the entire wastewater treatment works project was acquired in accordance with the requirements of the Uniform Relocation Assistance and Real Property Acquisition Policies Act of 1970 and EPA's regulation 40 CFR Part 4.

Dated this _____day of _____, 20___.

_____
Applicants' Authorized Representative

_____
Title (Mayor, City Manager, Commissioner, etc.)

_____
Attorney (Typed and Signed)

00672.7 Bid Bond

Know all men by these presents, that we, the undersigned,
_____ as

Principal, and_____as surety,

Hereby held and firmly bound unto _____ as Owner on the sum of _____ for the payment of which, well and truly to be made, We hereby jointly and severally bind ourselves, our heirs, executors, administrators, successors and assigns.

Signed this _____ day of _____, 2015.

This condition of the above obligation is such that whereas the principal has submitted to the Purchaser a certain bid, attached hereto and hereby made a part of hereof to enter into a contract in writing for the construction of:

SARP10 Program 179821.71.0406 Lick Creek Interceptor CIPP

Now therefore,

A) If said bid shall be rejected, or in the alternative,

B) If said bid shall be accepted and the principal shall execute and deliver a contract in the form of contract attached hereto (properly completed in accordance with said bid), required insurance certificates, and shall furnish a Bond for the payment of all persons performing labor or furnishing materials in connection therewith, and shall in all other respects perform the agreement created by the acceptance of said Bond,

Then this obligation shall be void, otherwise the same shall remain in force and effect; it being expressly understood and agreed that the liability of the surety for any and all claims hereunder shall, in no event, exceed the amount of this obligation as herein stated.

The surety, for value received, hereby stipulates and agrees that the obligations of said surety and its bond shall be in no way impaired or affected by any extension of the time within which the Purchaser may accept such bid; and said surety does hereby waive notice of any such extension.

In witness whereof, the principal and the surety hereunto set their hands and seals, and such of them as are corporations have caused their corporate seals to be hereto affixed and these presents to be signed by their proper officers, the day and year set forth above.

CONTRACTOR	**SURETY**
_____	Surety:_____
Contractor's Company Name	Name
_____	By: _____
Signature (principal)	Attorney in Fact - Signature
_____	_____
Printed or Typed Name and Title	Printed or Typed Name

00672.8 Schedule Impact Due to Weather

Program Manager will determine Contractor's entitlement to an extension of the Contract Time as a result of weather delays, based on the data included in Tables 1 and 2. Extensions of time will be granted at the discretion of the Program Manager for circumstances not covered by the flow chart.

The following rules apply to any analysis for weather related delays to this Project. Weather delay days may be awarded if the first two rules are met. Additional days may be awarded if conditions in Rule 3 are met for unusually heavy precipitation independent of Rules 1 and 2.

1. Rule 1: The average monthly precipitation amount must have been exceeded.

   If the total amount of actual precipitation in a month exceeds the average for that month shown in Table 1, the first test has been met. Go to rule number 2. (Precipitation is defined as the quantity of water deposited by rain, hail, sleet, or snow.)

2. Rule 2: The number of days in a month with actual precipitation greater than the threshold amount shown in Table 2 has been exceeded.

   The number of days with actual precipitation greater than the threshold amounts shown in Table 2 are eligible for award as weather delays days.

   Additional days may be awarded for unusually heavy precipitation independent of meeting the rules above.

3. Rule 3: Unusually heavy precipitation has occurred.

   Precipitation greater than one inch in a single day may be justification for an additional day time extension for each precipitation day. This rule may be applied singly but not in addition with any other rule.

National Weather Service Data for Memphis International Airport – Years 2003-2013

Table 1

Average Precipitation by Month (In Inches)											
Jan.	Feb.	Mar.	Apr.	May	June	July	Aug.	Sept.	Oct.	Nov.	Dec.
4.14	3.79	4.49	5.54	6.30	2.52	4.19	3.23	3.01	3.79	4.27	4.87

Table 2

Average Number of Days with Precipitation Greater than 0.25 Inches											
Jan.	Feb.	Mar.	Apr.	May	June	July	Aug.	Sept.	Oct.	Nov.	Dec.
5	5	5	5	5	3	4	3	3	4	5	5

Any weather-related extension of Contract time shall be non-compensable. Efficiencies gained as a result of favorable weather within a calendar month, where the number of days of normally anticipated weather days is less than expected, shall contribute to the project float and shall not affect the Contract Times.

Application for a weather related extension of time shall be submitted to the Program Manager, and shall state the extension requested and be supported by the relevant weather data.

00672.9 Code of Conduct

CODE OF CONDUCT FOR GLOBAL BUSINESS RELATIONSHIPS

Black & Veatch Corporation and its subsidiary companies (collectively hereinafter, the "Company") is a global company that conducts business in many countries through subsidiaries, branches, joint ventures, and other business arrangements.

As a responsible corporate citizen, the Company requires that all of its business operations observe certain basic standards of conduct. Also, as a company subject to the laws of the United States, the Company must ensure that its business relationships outside the United States will comply with the requirements of certain U.S. laws that impose on the Company standards of conduct for its business throughout the world.

For all business relationships, it is the policy of the Company that the following standards of conduct and legal requirements shall be observed in every aspect of transactions with the Company:

1) Applicable law must be complied with in the conduct of such relationships. If there is a conflict between applicable local law and applicable U.S. law, the guidance of the Company's Law Department will be sought in order to resolve such a conflict. However, the U.S. laws referred to in Paragraphs 4, 5, and 6 below must be complied with without exception.

2) The Company, customers, employees, suppliers, and other persons, organizations, and governments will be dealt with in a fair manner with honesty and integrity, observing high standards of personal and business ethics.

3) Business books and records will be maintained in a proper, responsible, and honest manner, which will allow the Company to comply with the laws applicable to it.

4) All applicable anti-bribery legislation must be complied with, including without limitation, (i) the domestic laws of the country in which operations take place, (ii) the U.S. Foreign Corrupt Practices Act ("FCPA"), (iii) the United Kingdom Bribery Act ("UKBA"), (iv) the national implementing legislation of any relevant jurisdictions under the Organisation for Economic Co-operation and Development ("OECD") Anti-Bribery Convention (Convention on Combating Bribery of Foreign Public Officials in International Business Transactions), and (v) any other applicable anti-bribery legislation.

5) The laws of the United States regarding boycotts must be complied with.

6) The laws of the United States and any other applicable jurisdictions regarding trade sanctions and export administration and control must be complied with for any information or material supplied by the Company.

7) Confidential or proprietary information will not be disclosed at any time to persons outside the business relationship without proper authorization.

8) Applicable antitrust and competition laws will be complied with.

00770 – Loss Control Manual

The Loss Control Manual is available for viewing at the SARP10 Program Office:

Contact Project Safety Manager Mark McKeon to schedule an appointment:

mckeonmp@Overlandcontracting.com or phone: 203-668-5035

Technical Specifications

Project Drawings can be downloaded at:
https://www4.ibackup.com/qmanager/servlet/share?key=acuhs13060

CITY OF MEMPHIS – STANDARD CONSTRUCTION SPECIFICATIONS
SECTION 00001 - MANHOLE GPS & MACP INSPECTION

PART 1 – SCOPE

1.01 This Work will consist of locating sanitary sewer system facilities, gathering sub-meter grade GPS coordinates of manhole (including lamphole) covers, Manhole Assessment Certification Program (MACP) protocol Level 1 and Level 2 manhole inspections using the National Association of Sewer Service Companies (NASSCO) MACP Version 6.0.1 protocols, associated photographs, camera inspection of manholes and the associated pipe connections, and documentation of manholes not found, not on grade and/or not showing. Manholes to be located, documented and inspected are in both improved streets, arterial and primary roads, backyards and unimproved easements. Once new manhole coordinates are obtained, the updated source GIS map data shall be delivered to Program Manager (from hereon Program Manager shall be interpreted as "Program Manager or his designee") in order to reflect the actual sewer system network.

The Work covered by this section includes furnishing all labor, competent MACP certified technicians/crew leads, equipment, tools, accessories, and materials required to GPS, perform MACP Level 1 and Level 2 inspections, conduct camera inspections and document the specified manholes.

1.02 Sub-meter GPS coordinates, updated GIS map data, Levels 1 and 2 MACP data and records, and camera inspection photos of the manholes shall be delivered to the Program Manager on clearly labeled external hard drive(s) which will become property of the Program Manager. Inspection data for any one asset shall not be split between multiple drives. MACP data files shall be formatted to facilitate upload into a MACP Exchange Database or internet upload to an FTP site as approved by the Program Manager.

1.03 Selected Contractor(s) will be provided two Geo-databases; one will have supporting records (aerial photo overlays, outfall and block maps and as-builts, as available), and a maiden database which will include the asset ID for each manhole.

PART 2 - MATERIALS AND EQUIPMENT

2.01 MATERIALS

A. Submittals

1. Unless otherwise specified, all sample submittals shall be delivered to the Program Manager within two weeks of the NTP.
2. A Traffic Control Plan shall be submitted to the Program Manager, including the following items:
   a. Outline of permit acquisition procedure for lane closures.
   b. Methods for proper signing and barricades, which comply with local requirements and the City.
   c. Major streets (e.g. Shelby County Principal Arterial & Minor Arterial) requiring a City approved permit if taking a lane for mobile operations, secured through Traffic Control Plan submittal to the City and signed by a TN P.E. The City requires a two-week lead time for permit processing.
      i. The Contractor will be required to deliver a sample primary/arterial road Traffic Control Plan for review by the City.
      ii. If the City determines that the nature of the work operation or the type of road in which the Contractor is working requires a permit, the Contractor will be required to modify the sample Traffic Control Plan to obtain a permit from the City.

d. For everywhere else where a permit is not required, the Contractor shall develop, provide, and implement a Traffic Control Plan for all mobile operations in accordance with standard MUTCD specifications.
e. The Contractor is also responsible for acquiring all necessary disposal and/or landfill site permits required to perform this work.
f. Railroad Rights of Way: The Contractor shall notify the Program Manager when work or access to manholes and sanitary sewers lie within the 25 feet railroad easement, as measured by 25 feet outside the nearest rail of the tracks. To access sewer facilities within the 25 feet of the railroad right of way, the Contractor shall contact 48 hours in advance the Program Manager, who will alert the City's Zone Construction Inspector to coordinate individual railroad direction and guidance.

3. Site Contractors emergency phone numbers.
4. Schedules of work on a weekly basis that will be delivered no later than 2:00 PM on Thursday for the week following, and daily AM email updates of approximate crew locations each day.
   a. Weekly schedule format shall contain the following elements:
      i. Map format.
      ii. Sufficient streets labeled and identified at a scale to provide clarity.
      iii. Nature and type of crew location by map area.
5. Permit required confined space entry plans in compliance with the Loss Control Manual.
6. GPS calibration standards, including frequency, are to be followed in the field; specify which available base stations will be used for the work.
7. Sample of sub-meter GPS coordinates delivered in electronic and pdf format.
8. Copies of NASSCO certifications for all field staff conducting MACP Levels 1 and 2 inspections.
9. Sample of MACP Level 1 and Level 2 documentation logs (with photo documentation comments and photos properly referenced) in MACP formats, in both electronic and pdf format.
10. Equipment list, including GPS and camera manufacturer and model equipment to be used.
11. Sample of the GPS coordinate delivery in an ESRI ArcPAD .axf file format.
12. Sample of the digital inspection data delivery in MS ACCESS database format.

2.02 EQUIPMENT

All equipment used for the gathering of GPS coordinates, collection of condition assessment information, and digital camera inspection of manholes shall be specifically designed and manufactured for the purpose intended under this Contract. The software and hardware for the electronic capture of the inspection defect observations must be consistent with NASSCO's MACP Level 1 and Level 2 requirements for the collection of data. ESRI ArcPad 10.1 is required for GPS data collection and GIS map updates for manhole / lamphole facility locations. Export of the electronic inspection data to an MACP format Microsoft ACCESS database for analysis is required.

The Contractor shall submit an equipment list to the Program Manager for approval before the commencement of the Work and shall certify that back-up equipment is available and can be delivered to the worksite in 72 hours.

A. GPS Equipment

1. Equipment shall be sub-meter grade, Trimble Pro Series Receivers with Floodlight technology capability, Top Con GRS-1 Series equipment or equal (to be approved by Program Manager prior to mobilization). GPS coordinates to be real-time or post-processed to achieve sub-meter accuracy. Equipment must have ESRI ArcPad 10.1 installed for use in data acquisition.

B. Camera

1. All cameras used shall be digital format color cameras specifically designed or modified for use in sewer manhole inspection work. All cameras used during inspections shall have a minimum of 5 mega pixels .jpg format for sufficient clarity and detail in the photos, and photos of at least 2 MB shall be submitted. The cameras shall be operable in 100 percent humidity conditions. The cameras shall be high-resolution cameras with wide viewing angle lenses and either automatic or remote focus and iris controls. Camera lighting shall be sufficient for use with digital color inspection cameras and for the manhole diameters and pipe connection diameters identified in the contract.

   The following photo sequence is specified: Photo 1- surface view photos taken of the manhole should include a whiteboard (or similar) with the manhole ID number identified on it. The photographer should be standing with the outlet pipe facing their 6 o'clock position. Photo 2 - the downhole photo of the manhole channel should be taken with the outlet pipe facing their 6 o'clock position. Additional photos as specified by MACP guidance.

   Inadequate lighting, image distortions, blurry or murky images, low resolution, dirty lens and/or other quality issues will be a cause for rejection. If unsatisfactory, Contractor shall perform work until deliverable is of acceptable quality. No payment will be made for unsatisfactory inspections or until product is accepted.

C. Data Logger and Software

1. MACP and camera inspections and logs created and captured electronically during the MACP inspection of the manhole through the use of commercially available electronic data loggers are required. Paper records for data collection in the field shall not be used. NASSCO MACP protocols shall be used for capturing and recording the observations.

   The data logger equipment and software shall allow Program Manager direct access to the captured electronic data, and provide for export of the data in accordance with MACP formats and standards.

D. Retrieval of Stuck Equipment

1. The Contractor is responsible for hiring a licensed sub-contractor to retrieve any equipment that becomes lodged in the sewer system through the execution of the scope of work (fallen cameras, jet nozzles, inflatable plugs, sandbags etc.) at the Contractor's own cost. Such retrieval by an appropriately licensed sub-contractor shall be made within 72 hours to avoid interfering with the City of Memphis sewer system operations. Any and all impacts and related costs due to the Contractor's equipment in the line shall be the responsibility of the Contractor.

PART 3 – CONSTRUCTION REQUIREMENTS

3.01 INSPECTION

A. GPS Coordinates of Manhole Cover

Program Manager will provide Contractor with a digital copy of the original GIS source map indicating the sewer system network compiled from existing City records.

The Contractor shall capture and record sub-meter grade x, y and z coordinates of each manhole cover identified in the original GIS maiden data map provided with a unique asset identification (ID) number. Additional sanitary sewer lamphole and manholes found in the field in the course of the inspection work that are not provided in current mapping nor identified with a current unique asset ID shall be documented and GPS coordinates shall be recorded. A provisional manhole asset ID number shall be used by the Contractor by adding a dash and a two-character number to the closest upstream manhole ID.

Record sub-meter GPS coordinates in NAD83 TN State Plane Coordinates horizontal, NAVD88 vertical in US Survey feet using properly-calibrated GPS equipment. If GPS coordinates cannot be obtained due to buildings, trees or cloud cover, Contractor shall note this on the inspection form and return at least one additional time at a different time of day or under different sky cover. If both attempts fail at securing the sub-meter coordinates, this is to be documented and reported in the submittal. Land surveying shall not be required where GPS is not available.

The Contractor shall be expected to use all reasonable means to locate the lampholes and manholes in the field. This includes walking the pipeline alignment, using measuring tapes or wheels from the last found manhole, using metal detectors, or other means. If manholes are not able to be found and documented or unknown manholes are found, record the reasons for not locating or not opening the manhole or the specifics of the new manhole found, and submit with supporting MACP documentation to the Program Manager daily.

Once GPS coordinates are obtained for known and newly discovered facilities, the original GIS map data shall be delivered to the Program Manager to reflect the actual sewer system network for the assigned inspection area.

The Contractor shall revisit predefined GPS control locations near project area at least one time per day per each GPS unit used as a quality control check on GPS accuracy. Contractor is to document these checks on a single log, which shall be kept on file for the duration of the project, and shall be released to Program Manager on a weekly basis.

B. MACP MH Inspection

The Contractor shall document and record each sanitary sewer manhole inspection in MACP Level 1 format for lampholes and Level 2 format for manholes with supporting completed MACP format database. The complete NASSCO MACP Levels 1 and Level 2 protocols must be utilized for the lamphole and manhole inspections respectively, and must be associated in the electronic database and pdf documentation with the unique asset ID provided.

The Contractor shall mark the direction of wastewater flow (one arrow per pipe) in and out of the manhole around the perimeter of the manhole cover on the street with discrete green arrows spray painted onto the road surface using a guide or template for the

arrows. The arrows shall be a minimum of 12 inches and a maximum of 18 inches in length.

The Contractor shall follow the prescribed MACP Level 1 and Level 2 procedures and use the required nomenclature and formats to document the manhole interior and exterior conditions and defects.

Contractor shall be responsible for cleanup, repair, fines, property damage costs, and claims for any sewage backup, spillage or sanitary sewer overflow during or as a result of the field operations.

C. Camera Inspection of Manholes and Associated Pipe Connections

Digital camera inspection of manholes shall be completed in conjunction with Level 2 manhole inspections of defects and include each sewer pipe connection in the manhole. The photo record of the inspection shall document defects and leaks and shall include a photo record of the connecting pipes in each manhole. Abbreviations, naming conventions, and numbering conventions shall be documented in MACP formats. For photo image quality reference back to Section 2.02.B.1.

File naming must be consistent. Additional instructions, naming conventions, file structures, etc. will be provided after contract award.

D. Meetings

The Program Team will arrange bi-weekly (every other week) meetings with the contractor to discuss data management and quality, and field issues.

PART 4 – DELIVERABLES

4.01 RECORDS

A. GPS Manhole Cover Coordinates

Contractor's Level 1 Lamphole and Level 2 Manhole GPS coordinate delivery to the Program Manager shall be in an ESRI ArcPAD .axf file format. The updated GIS source map data reflecting the actual sewer system network shall also be delivered. Inspection data is to be delivered to the Program Manager by the close of business on the Monday following a week after data acquisition. Subsequent data will not be accepted if GPS data is not obtained and delivered at the same time as inspection is conducted. The requested GPS control check file (MS EXCEL) shall also be delivered at this time.

B. Level 1 and Level 2 Inspection Documentation

Deliver complete MACP Level 1 for lampholes and Level 2 inspections for manholes in MACP electronic database and pdf electronic formats on an external hard drive. Delivery will be in MS ACCESS database format unless otherwise preapproved by the Program Manager. Inspection data is to be delivered to the Program Manager by the close of business on the Monday following a week after data acquisition.

C. Camera Inspection Documentation

Include specified camera photo documentation of defects, leaks and pipe connections in the MACP Image reference field as appropriate, for the Level 2 documentation. Inspection data is to be delivered to the Program Manager by the close of business on the Monday following a week after data acquisition.

D. Manhole Reports

Deliver a summary report in PDF format of each manhole inspected. The report will include all MACP Level 1 & Level 2 data collected for the manhole. The report shall include the surface view photo of the manhole with the outlet pipe facing 6 o'clock as well as a downhole photo of the channel with the outlet pipe at 6 o'clock. Any defects noted in the manhole shall also have an accompanying photo in the report.

E. Draft Report and Final Report

In addition to the electronic database and pdf format reports, three copies of the Draft Report will contain hard copies of each of the MACP inspections with camera manhole defect and pipe connection photographs. The MACP compliant database of the inspections in ACCESS format shall also be submitted to the Program Manager electronically on an external hard drive.

Draft Report shall be delivered to Program Manager within fifteen working days of the last or final inspection. The Program Manager will have a two workweek period to review and provide comments to the Contractor. The Contractor shall address all comments and submit the Final Report within one workweek from receipt of comments. At the Program Manager's discretion, a meeting will be held upon submittal of the Final Report to have the Contractor go over the processes used to address comments.

F. Quality

Rejection of deliverables will be submitted to the Contractor via the Program Team in a written communication discussing issues that must be addressed. The Contractor will be required to follow up with a response within three business days upon receipt of the written communication. Contractors will have seven (7) calendar days from the rejection notice date to make the necessary corrections and resubmit the data deliverable in its entirety.

PART 5 – MEASUREMENT

5.01 GPS COORDINATES OF MANHOLE COVER

The capture and associated documentation of sub-meter GPS x, y and z coordinates for each lamphole and manhole cover will be measured for payment per each lamphole and manhole located by GPS and its coordinates recorded in accordance with the specification, provided that documentation meets QA/QC standards.

5.02 MACP LEVEL 1 FOR LAMPHOLE INSPECTIONS

The inspection and recording of all lamphole observations in a MACP compliant fashion will be measured for payment per each lamphole inspected in accordance with the specification.

5.03 MACP LEVEL 2 FOR MANHOLE INSPECTIONS

The inspection and recording of all manhole observations in a MACP compliant fashion will be measured for payment per each manhole inspected in accordance with the specification.

PART 6 – PAYMENT

6.01 GPS COORDINATES OF MANHOLE COVER

The capture and associated documentation of sub-meter GPS x, y and z coordinates for each manhole cover shall be paid for at the unit price bid for each lamphole and manhole cover coordinates documented and recorded in accordance with the specification provided that QA/QC standards are met.

The unit price for each manhole cover GPS set of coordinates shall cover the entire cost of the GPS equipment and time necessary to gather the coordinates, including but not limited to calibrating the equipment; setup and access; traffic control; documenting results in prescribed MACP electronic formats, records and logs; power supply for equipment; interim and final reports; and all other appurtenant work.

No additional payment will be made for:
Location or re-inspection due to cars parked over manholes or other impediments to on grade and showing manhole covers.
Additional visit(s) to secure the proper GPS coordinates due to lack of adequate satellite coverage or reception.

6.02 MACP LEVEL 1 FOR LAMPHOLE INSPECTIONS

The inspection and recording of all lamphole observations in a MACP format shall be paid for at the unit price bid per each MACP Level 1 inspection performed in accordance with the specification, provided that QA/QC standards are met.

The unit price for each MACP lamphole inspection shall cover the entire cost of the inspection and reporting, including but not limited to setup and access, documenting results in records and logs, power supply for equipment, interim and final reports and all other appurtenant work.

6.03 MACP LEVEL 2 FOR MANHOLE INSPECTIONS

The inspection and recording of all manhole observations in a MACP format shall be paid for at the unit price bid per each MACP Level 2 inspection performed in accordance with the specification, provided that QA/QC standards are met.

The unit price for each MACP manhole inspection shall cover the entire cost of the inspection and reporting, including but not limited to setup and access, documenting results in records and logs, digital photos, power supply for equipment, interim and final reports, and all other appurtenant work.

6.04 PAYMENT WILL BE MADE UNDER:

Item No.	Pay Item	Pay Unit
00001-6.01	GPS COORDINATES OF MANHOLE COVER	EACH
00001-6.02	MACP LEVEL 1 LAMPHOLE INSPECTIONS	EACH

00001-6.03	MACP LEVEL 2 MANHOLE INSPECTIONS	EACH

END OF SECTION 00001

CITY OF MEMPHIS – STANDARD CONSTRUCTION SPECIFICATIONS
SECTION 00003 - CLOSED CIRCUIT TELEVISION INSPECTION OF SEWER MAINS & CONNECTIONS

PART 1 – SCOPE

1.01 This Work will consist of cleaning and Pipeline Assessment Certification Program (PACP) internal closed circuit television (CCTV) surveys to digitally inspect and record conditions of existing sanitary sewer mains and connections. Sewer pipes and connections to be inspected are located in both improved streets, arterial and primary roads, backyards and unimproved easements.

1.02 The Work covered by this section includes furnishing all labor, competent PACP certified technicians, equipment, tools, accessories, and materials required to clean and inspect the designated sanitary sewer lines.

1.03 PACP compliant inspections, logs, data, and photos shall be delivered to the Program Manager (from hereon Program Manager shall be interpreted as "Program Manager or his designee") on external hard drive(s) which will become property of the Program Manager. Data files shall be formatted to facilitate upload into a PACP compliant Exchange database or internet uploads formats to an FTP site approved by the Program Manager.

PART 2 – MATERIALS & EQUIPMENT

2.01 MATERIALS

A. Submittals

1. Unless otherwise specified all sample submittals shall be delivered to the Program Manager within two weeks of the NTP.
2. Traffic Control Plan shall be submitted to the Program Manager, including the following items:
   a. Outline of permit acquisition procedure for lane closures.
   b. Methods for proper signing and barricades, which comply with City of Memphis requirements.
   c. Major streets (e.g. Shelby County Principal Arterial & Minor Arterial) requiring a City approved permit if taking a lane for mobile operations, secured through Traffic Control Plan submittal to the City and signed by a TN P.E. The City requires two-week lead time for permit processing.
      i. The Contractor will be required to deliver a sample primary/arterial road Traffic Control Plan for review by the City.
      ii. If the City determines that the nature of the work operation or the type of road in which the Contractor is working requires a permit, the Contractor will be required to modify the sample Traffic Control Plan to obtain a permit from the City.
   d. For everywhere else where a permit is not required, the Contractor shall develop, provide, and implement a traffic control plan for all mobile operations in accordance with standard MUTCD specifications.
   e. The Contractor is also responsible for acquiring all necessary disposal and/or landfill site permits as required to perform this work.
   f. Railroad Rights of Way: The Contractor shall notify the Program Manager when work or access to manholes and sanitary sewers lie within the 25 feet railroad easement as measured by 25 feet outside the nearest rail of the tracks. To access sewer facilities within the 25 feet of the railroad right of way the Contractor shall contact the Program Manager 48 hours in advance who will alert the City's Zone Construction Inspector to coordinate individual railroad direction and guidance.

3. Site Contractor emergency phone numbers.
4. Schedules of work on a weekly basis that will be delivered no later than 2:00 PM on Thursday for the week following with daily AM email updates of approximate crew locations each day.
   a. Weekly schedule format shall contain the following elements:
      i. Map format.
      ii. Sufficient streets labeled and identified at a scale to provide clarity.
      iii. Nature and type of crew location by map area.
5. Permit required confined space entry plans in compliance with the Loss Control Manual.
6. Copies of National Association of Sewer Service Companies (NASSCO) certification for all field staff conducting PACP inspections.
7. Sample of PACP compliant television survey log in MS Access format.
8. Sample of PACP compliant video inspection in MP-4 (Web optimized) format.
9. Cleaning and CCTV vehicle, equipment, and cleaning supplies list.
10. Disposal site(s) and appropriate landfill permits for appropriate disposal of all waste materials removed from the sewer during the light and heavy cleaning operations.

2.02 EQUIPMENT

A. General

1. All equipment used for PACP compliant CCTV sewer segment inspections of existing sanitary sewer mains and connections shall be specifically designed and manufactured for the purpose intended under this Contract. The software and hardware for the electronic capture of the inspection defects and recorded observations must be Version 6.0.1 NASSCO PACP compliant.
2. The Contractor shall submit an equipment list to the Program Manager for approval before the commencement of the Work and shall certify that back-up equipment is available and can be delivered to the worksite within 72 hours.
3. The Contractor shall provide equipment to perform inspections of sewer mains located in streets, street rights-of-way, backyards, easements and rights-of way that are off-road.
   a. Including but not limited to portable CCTV equipment, vehicles capable of transporting TV equipment and accessing remote easements, and adequate cleaning equipment rights of way or easement applications.

B. PACP Compliant Software & Data logger Requirements

1. Data logger
   a. Internal inspection logs created and captured electronically during the television inspection through the use of commercially available electronic data loggers in the truck are required. NASSCO PACP protocols Version 6.0.1 shall be used for capturing and recording the observations. Audio commentary made during the inspection and captured on the digital video shall correspond with the PACP observations on the log.
   b. The data logger equipment and software shall allow the Program Manager access directly to the captured electronic data and provide for a non-proprietary export of the data into MS ACCESS databases in accordance with PACP standards for standalone database review.
2. Software must be compliant with the NASSCO PACP V.6.0.1 standards. Follow PACP protocol for recording of observations and defects for sewer mains.

a. All software shall be capable of providing complete survey reports in compliance with PACP, and the software shall be the V.6.0.1 of the PACP compliant software.
b. The Program Manager has no intent to specify which software the Contractor shall use, but requires the software and the submitted database to be fully compliant with PACP V.6.0.1 and capable of being exported to ACCESS databases. No payment will be rendered for improperly formatted data.
c. Software and data logger must be capable of capturing sewer main and sewer lateral observations by PACP descriptions, record travel footage along pipeline, and video time stamp the recorded observations to support hyper linking from the digital record to the event point or location within the digital inspection record. The same requirements apply to still photo images (if provided) which shall follow PACP guidelines and be hyperlinked to the inspection log.

C. Sewer Main CCTV

1. Sewer Main Digital Color Video Camera
   a. All cameras used shall be digital format color CCTV units specifically designed and constructed for use in sewer pipe inspection work. The cameras shall be operable in 100 percent humidity conditions. The camera shall have a high-resolution, 360-degree pan and tilt or rotating head with a wide viewing angle lens and either automatic or remote focus and iris controls. Camera lighting shall be sufficient for use with digital color inspection cameras and for the manhole and pipe diameters identified in the contract.
      i. Camera, Television Monitor, and Other Components shall be capable of producing a high resolution color digital inspection record.
      ii. Video file to be in MP-4 (Web optimized) format
   b. In all cases, the complete digital inspection system (camera, lens, lighting, cables, monitors, and recorders) shall be capable of providing a digital picture and digital video quality acceptable to the Program Manager. Inadequate lighting, image distortions, blurry or murky images, and dirty lenses will be a cause for rejection. No payment will be made for unsatisfactory inspections and the Contractor shall perform work until deliverable is of acceptable quality. Digital video cameras/digital recorders not specifically intended for use for internal television inspection of manholes and sewer lines shall not be permitted.
   c. Pan and tilt type camera, capable of turning at right angles to pipe's axis over an entire pipe wall perimeter shall be used.
      i. The camera lens shall be capable of self-righting itself after a lateral view or connection view with a return view down the pipe with a "home" capability for the lens.
   d. Lighting shall be suitable to allow clear picture of entire inner pipe wall extending at least 10 feet in front, including black High Density Polyethylene (HDPE) pipe.
   e. Document header and observations shall be in accordance with PACP V.6.0.1 protocols.

D. Cleaning Equipment

1. Hydraulic sewer pipe cleaners or combination hydraulic/vacuum cleaners shall be specifically designed and constructed for such cleaning.
2. Mechanical sewer pipe cleaners shall be specifically designed and constructed for such cleaning.

3. The Contractor shall possess equipment capable of cleaning hydraulically or mechanically a minimum of 1,000 linear feet of pipe from one direction and have a minimum 1,000 linear feet of hose or cable on-site during the cleaning execution.
4. Hydraulic sewer pipe cleaners shall be specifically designed and constructed for such cleaning. The sewer cleaner shall have a minimum usable water capacity of 600 gallons and a pump capable of delivering at least 30 gallons per minute at 1,500 psi at the nozzle.
   a. The hydraulic cleaning equipment shall have multiple hydraulic cleaner hose nozzles for a variety of sewer cleaning conditions, including grease, roots, debris and granular materials.
   b. Vacuum equipment shall be capable of lifting debris removed from the segment from the downstream manhole.
5. Mechanical sewer pipe cleaners (cable machines with buckets, brushes, swabs, root cutters, and power rodders with similar capability) shall be capable of controlled forward and reverse travel through the sewers without inflicting damage to the existing pipe in removing rocks, grit and other heavy debris and roots.

PART 3 – CONSTRUCTION REQUIREMENTS

3.01 CCTV Inspection of Sewer Mains

A. Cleaning

Sewer pipe cleaners or combination hydraulic-vacuum cleaners must accompany CCTV units at all times. Ideally, sewers lines are to be cleaned and then followed immediately by CCTV inspection. All sewers must be cleaned in advance of CCTV during the same calendar day they are inspected.

1. Light Cleaning
   a. Before CCTV work, the Contractor shall light clean the sewer line from manhole to manhole, from upstream to downstream direction unless an obstruction is encountered, one sewer section at a time and performed as efficiently as possible at the Contractor's discretion.
   b. Materials shall not be passed from one sewer segment to another but must be trapped and removed from each sewer segment prior to CCTV inspection.
2. Heavy Cleaning
   a. If a camera is inserted and additional debris or impediments to inspection are observed following the required light cleaning, heavy cleaning shall be approved by the Program Manager. Sections of pipe containing significant roots, large areas of debris, and/or several inches of depth of sands and gravels that will require the use of additional hydraulic nozzles, cable/bucket machine, power rodders and root cutters is considered heavy cleaning.
   b. Heavy cleaning will be proposed by the Contractor and approved by the Program Manager. The Contractor must obtain prior approval for heavy cleaning in each sewer segment in order to receive payment for heavy cleaning.
3. Cleaning Execution
   a. No roots, grease or debris from light or heavy cleaning shall be passed from sewer segment to sewer segment during the cleaning operation. All debris flushed from the sewer must be collected, captured, and removed from the sewer at the downstream manhole.
   b. Roots shall be removed in the sections where root intrusion is a problem. Special precautions shall be exercised during the cleaning operation to assure complete removal of visible roots from the joint area and so as not to incur further damage to the pipe. Any visible roots that may impact rehabilitation

efforts shall be removed. Fine roots are allowed if the Contractor made a heavy cleaning attempt to remove roots with proper root removal means. Procedures may include the use of mechanical devices such as rodding machines, expanding root cutters and porcupines, and hydraulic procedures such as high-pressure jet cleaners.

c. The Contractor is responsible for safe, responsible and legal handling and disposal of all material and debris removed from the sewers. The Contractor is responsible for all permits and landfill fees associated with the disposal of debris collected and removed from the sewer.

d. The Contractor shall provide a dated manifest of the volume or weight of the dewatered sewer cleaning loads taken and dumped at the permitted dump site selected by the Contractor. Each waste load manifest shall be associated with a list of corresponding sewer segments from where the waste originated.

B. Sewer Flow Levels During Inspection Operations

1. Maintain low sewer flow during inspection by using sandbags or flow-through plugs or by inspecting during low flow times of day, evening, or early morning hours while camera is moving and recording observations in the sewer segment. Any items used to restrict flow shall be removed immediately after intended use.
   a. Flow-through Plugs: If used, secure the plugs so as to remain in place during inspection. Use a fail-safe device at the downstream pipe connection to ensure the plug is not lost in the downstream sewer segment if it becomes dislodged from the upstream pipe connection.
   b. Conduct all cleaning and CCTV operations to prevent building backups and sewer overflows.
   c. Contractor shall be responsible for cleanup, repair, fines, property damage costs, and claims for any sewage backup, spillage or sanitary sewer overflow during or as a result of the cleaning and inspection operations.
2. Allowable Depth of Flow For Inspection Operations
   a. For effective inspection, all flow shall be minimized in the segment being inspected. However, the depth of flow at the upstream manhole of the interceptor section being worked shall be within the specified limits provided herein.
3. Maximum Allowable Depth of Flow for CCTV Inspection
   a. 6 - 10 inch diameter Pipe - 20% of pipe diameter
   b. 12 - 18 inch diameter Pipe - 25% of pipe diameter
   c. 24-inch diameter and Larger Pipe - 30% of pipe diameter
   d. Exceptions to these guidelines shall result in rejection, and non-payment, of the CCTV inspection unless approved in advance by the Program Manager.

C. Camera Operations

1. Using the pan/tilt feature, pan the interior of the manhole for record purposes in accordance with V.6.0.1 PACP protocols and begin and terminate the inspection in the starting and ending manholes.
   a. Capture the inside of manhole walls, manhole channel, and pipe connection to wall at both upstream and downstream manhole and lateral connections using the digital mainline sewer camera and the pan/tilt feature.
2. Place the camera at center of manhole and commence video before entering pipe.
   a. Start footage counter at manhole wall/pipe connection or at a short pre-measured distance down the pipe for the sewer segment inspection.

3. Connections: The digital camera shall be used to look at connections and up laterals from the connection in the main sewer pipe being inspected. The camera shall pause, pan, and record all connections. Conditions noted in these sidelines and laterals shall be noted on the inspection logs.
4. Mainline camera operations:
   a. Move through line at speed no greater than 30 feet per minute stopping for minimum 10 seconds to record lateral connections, mainline connections, defects, and features and points of interest.
   b. Do not float camera.
   c. Maintain technical quality, sharp focus, and distortion free picture with the camera lens centered in the pipe for the different diameters inspected.
      i. Eliminate steam in line for duration of inspection.
      ii. Utilize blower as needed to defog sewer line.
   d. Digitally record a complete sewer segment in its entirety with no breaks, “blink-outs,” or interruptions from manhole to manhole according to PACP V.6.0.1 formats.
   e. Pan, tilt, and rotate as necessary to best view and evaluate lateral connections, pipe defects, features, obstructions, and points of interest.
   f. Use power winches, powered rewinds, self-propelled tractors, or other devices that do not obstruct camera view or interfere with proper documentation of sewer conditions to move camera through sewer.
   i. Whenever non-remote powered and controlled winches are used, set up telephones or other suitable means of communication between manholes to insure good communication.
   g. Use hydraulic jet nozzle pressure and flow to remove standing water from depressions or sags in the sewer, if necessary, for complete inspection of the sag portion of the sewer segment.
   h. Measurement for location of defects and service laterals:
      i. At ground level by means of Program Manager-approved footage counter or metering device.
      ii. Electronic display measurement meters: Accurate to PACP standards over length of section being televised.
      iii. Do not pull unnecessary length of slack camera cable if it impacts the footage counter.
   i. Stop camera at service connections and inspect lateral with pan and tilt camera.
      i. Identify building connection in PACP compliant terms as active, capped, or abandoned.
      ii. If no wastewater flows are being discharged from building, consider steady, clear observed flow as infiltration/inflow.
   j. Identification of defects
      i. If roots, sludge, or sediment material impedes inspection after the light cleaning, withdraw camera and perform heavy cleaning at the direction of the Program Manager.
      ii. Upon completion of heavy cleaning operation, resume internal inspection.
      iii. Furnish media confirmation for heavy cleaning (more than three passes with jet cleaner) to Program Manager.
      iv. If protruding tap impedes inspection trim protruding tap to 1/2 inch.
   k. If obstructions are not passable and cannot be removed by sewer cleaning, withdraw CCTV equipment and perform a reverse inspection from opposite end of the sewer segment in accordance with PACP protocols.
      i. Contractor shall be responsible for costs associated for reverse set-ups when an obstruction is encountered that cannot be passed.
      ii. Contractor shall be responsible for all judgments and impacts as to whether an obstruction in the sewer main can be passed. Costs involved in

extracting a stuck camera in the sewer main will be borne by the Contractor and at no additional cost to the Program Manager.

i. When additional obstructions are encountered after reversal of equipment and no means are available for passing a second obstruction in order to complete the sewer main inspection, remand the segment inspection to the Program Manager for resolution. The portion of the main inspected will be paid for as prescribed.

l. Undocumented facilities

i. If undocumented manholes or sewer mains (facilities not on the field updated GIS sewer maps) are encountered during the inspection, the Contractor needs to complete the documentation requirements per PACP requirements and capture on the video the following:

1. Approximate horizontal distance from the upstream or reference manhole.
2. Approximate depth of the undocumented manhole by turning the pan/tilt camera vertically and estimating the height of the cover from the invert.
3. A provisional manhole asset ID number shall be used by the Contractor by adding a dash and two-character number to the closest upstream manhole ID.

m. Retrieval of Stuck Equipment

The Contractor is responsible for hiring a licensed sub-contractor to retrieve any equipment/foreign objects that get stuck in the sewer system through the execution of the scope of work (fallen cameras, jet nozzles, inflatable plugs, sandbags etc.) at the Contractor's own cost. Such retrieval by an appropriately licensed sub-contractor shall be made within 72 hours to avoid interfering with the City of Memphis sewer system operations. Any and all impacts and related costs due to the Contractor's equipment in the line shall be the responsibility of the Contractor. Contractor shall follow SARP10 sewer point repair specifications outlined in "Section 02540 Sanitary Sewer Point Repairs" and "Section 02950 Removal and Replacement of Pavements and Incidentals" during retrieval of equipment. Also per "00585.2.2 Safety, Health, and Accident Prevention Program", Purchaser must approve sub-tier contractors prior to mobilization to the jobsite.

D. Quality Assurance

1. With each monthly invoice the Contractor shall provide a QA/QC memo documenting that 10% of the previous month's CCTV data has undergone a random, independent review by a PACP certified reviewer using NASSCO standards for Television Inspection of Main Sewer and PACP Quality control as the basis for the QA/QC procedures. The independent reviewer shall be a Tennessee P.E. or is a P.E. in another state and has a Tennessee P.E. license pending. Each line segment which has been randomly reviewed shall be identified in the QA/QC memo as well as any subsequent findings or recommendations. Internal independent QA/QC is acceptable, as long as the person is a Tennessee P.E. or is a P.E. in another state and has a Tennessee P.E. license pending. Failure to submit the QA/QC memo shall delay payment of the current month's invoice.
2. For all new Contractors and Operators who begin PACP coding, an initial review of CCTV data will consist of reviewing, at a minimum, 20 of the first 100 PACP inspection records submitted. Subsequent reviews will be based on the results of the initial reviews as explained below.

3. Auditing Procedures:
   a. Header information: As explained in the NASSCO PACP Quality Control Standards each audited inspection record is given an accuracy level for the header information and the detailed observation records. It is expected that the accuracy of the header record exceed 90% because the majority of the contents are based upon facts and not subject to operator judgment. To assess the accuracy level of the header, record the number of errors as compared to the total number of header fields using the following formula:
      100% - (error count/total header fields)*100% = Header Accuracy
   b. Detailed Observations: Determining the accuracy level for the detailed observation records is similar to the method for assessing the header record. The main difference being that a defect observation has multiple data entries that must also be counted towards the total number of entry fields. In the event that a defect is not coded all of the required entries for coding the missed defect are counted towards the total error count. The following formula is used to calculate the accuracy level of the detailed observation records:
      100% - (error count/total entries) * 100% = Detail Accuracy
   c. Review Scoring and Results
      i. Satisfactory Review, No changes required. Accuracy Level of 90% or above for both the Header Record and Observation Detail with no major errors or omissions found.
      ii. Unsatisfactory Review (below levels of acceptance) will not be accepted by the Program Manager and will not be considered payable items in the Contractor's Request for Payment.

E. Deliverable Documentation

1. Mainline Sewer.
   a. Submit V.6.0.1 PACP compliant records, logs, and electronic inspection data for sewer line inspection to Program Manager by the close of business on the Monday following a week after data acquisition
   b. Monthly QA/QC memo submittal listing which segments have been randomly reviewed, as well as any subsequent findings or recommendations.
   c. Digital videos, data, and photos shall be delivered to the Program Manager on external hard drives which will become property of the Program Manager.
   d. Data files shall be formatted to facilitate upload into a PACP Exchange Database with the approval of the Program Manager.
   e. Inspections displaying poor digital video/audio quality will be rejected. Quality refers to, but is not limited to, grease or debris on lens, camera under water, image too dark or light, image washed-out, distorted image, out of focus images, lines improperly cleaned, and poor/no audio.
      i. Contractor will re-televise rejected inspections and resubmit inspections at no additional cost to the Program Manager.
2. Map changes/undocumented manholes:
   a. For map changes identifying undocumented manholes and network changes which were found as a result of field inspections or observations, a Map Edit Form shall also be prepared and supplied by the Contractor with a drawing or sketch and shall indicate special details, field measurement or distances, or locations about an observed undocumented manhole or a change to the sewer network. The Map Edit Form should also identify buried manholes and siphons that have been encountered.
   b. Contractor shall indicate all buried manholes identified in the field via CCTV using the provided Buried Manhole Form. Any additional manholes that have

not been located or verified via CCTV but are impeding the completion of required CCTV work should be designated as unable to locate (UTL) and be included on the form.

F. Easement or Turf Operation

1. The Contractor will restore the work area to its original condition as quickly as possible after the inspection is complete. The Contractor will not be allowed to postpone restoration of the site until the end of the project.

PART 4 –DELIVERABLES

4.01 RECORDS

A. Pipe Cleaning Record

The Contractor shall provide a dated manifest of the volume or weight of the dewatered sewer cleaning loads taken and dumped at the permitted dump site selected by the Contractor. Each waste load manifest shall be associated with a list of corresponding sewer segments from where the waste originated.

B. Digital Inspection Record

In the digital PACP V.6.0.1 compliant format, the Contractor shall provide the following information:

1. Digital CCTV survey inspection which shall be recorded and shall be continuous as the inspection proceeds through the manholes and sewer pipes. Inspection videos should be delivered in an MP-4(Web optimized) format.
2. Digital Recordings: The digital recording shall document the visual and audio record of the manhole and sewer pipe inspection and shall be the basis of measurement and payment. Digital recording playback shall be at the same speed that it was recorded. Original digital recordings for the Project shall be forwarded to the Program Manager on clearly labeled external hard drive(s) in PACP ACCESS format with final report submittals and shall become the property of the Program Manager. Data for a single facility asset will not be split across multiple hard drives. Digital recordings shall be available to the Program Manager by the close of business on the Monday following a week after data acquisition. File naming must be consistent. Additional instructions, naming conventions, file structures, etc. will be provided after contract award.
   a. Picture Quality: The sewer inspection digital record shall be free of steam, fog, vapor, or other headspace distortion that degrades the quality of the picture from the intended purpose of evaluating the sewer for structural and watertight integrity. If necessary, the Contractor shall provide positive ventilation or other means through the sewer pipe to draw out steam, fog, and vapor that will degrade the recorded image of the pipe.

C. Inspection Documentation Logs

Observations made during television inspection shall be documented in an unmodified PACP compliant manner within an electronic inspection log form, supported by accompanying audio, digital photographs and MP-4 (Web optimized) format recording written to an external hard drive and submitted to the Program Manager. Hard copies of

completed inspection log photographs shall be furnished to the Program Manager with invoicing.

D. Electronic & Hard Copy Records

1. Reports:
The Contractor shall prepare printed inspection log reports for each associated sewer pipes inspected during the actual field inspection activities. These field logs shall then be reviewed by the Contractor's technical staff, along with reviewing the associated digital video record, as a means of ensuring that no defects or entries are omitted or incorrect. Edited field logs shall then be used in the final project reports and submitted in pdf format.

2. Draft Report and Final Report:
The Draft Final Report will contain electronic and hard copies of each of the PACP CCTV log pipe segment inspection logs. Digital recordings of the inspections written to an external hard drive and the PACP compliant database of the inspections in ACCESS format shall also be submitted in electronic and pdf format.

Draft Report shall be delivered to the Program Manager within fifteen working days the last or final inspection. The Program Manager will have two workweeks to review and comment. Contractor shall address all comments provided and submit a Final Report within one workweek upon receipt of comments. At the Program Manager's discretion a meeting will be held so the Contractor can explain the processes used to address the comments.

E. Meetings

The Program Team will arrange bi-weekly meetings (every other week) with the contractor to discuss data management and field issues.

F. Quality

Rejection of deliverables will be submitted to the Contractor via the Program Team in a written communication discussing issues that must be addressed. The Contractor will be required to follow up with a response within three business days upon receipt of the written communication. Contractors will have seven (7) calendar days from the rejection notice date to make the necessary corrections and resubmit the data deliverable in its entirety.

PART 5 – MEASUREMENT

5.01 LIGHT CLEANING & CCTV INSPECTION

Light cleaning and mainline CCTV inspection shall be measured by linear foot by each diameter of mainline sewer inspected and documented in accordance with the specification.

5.02 HEAVY CLEANING

Heavy cleaning shall be measured by linear foot of each diameter of heavy cleaning approved by the Program Manager and documented.

PART 6 – PAYMENT

6.01 MAINLINE CCTV INSPECTION

Light cleaning and mainline CCTV inspection shall be paid for at the unit price for each linear foot of each diameter inspected and documented in accordance with the specification.

The unit price for Light Cleaning and Mainline CCTV inspection shall cover the entire cost of the required light cleaning and CCTV inspection and reporting in accordance with PACP V 6.0.1 format, including but not limited to labor, mobilization and access, CCTV equipment, recording media, traffic control, light cleaning of mainline sewer, documenting results in PACP records and logs, digital format recordings, photo equipment, power supply for equipment, interim and final reports and all other appurtenant work.

No additional payment will be made for:
1. Re-inspection due to rejected inspection and/or records for any reason.
2. Reversals.
3. Performing excavation and associated sewer point repair to retrieve a stuck CCTV camera or hydraulic cleaning hose/nozzle.
4. Incomplete electronic logs.

6.02 HEAVY CLEANING

Heavy Cleaning shall be paid for at the unit price for each linear foot of each diameter of heavy cleaned sewers at the direction of the Program Manager and in accordance with the specification.

The unit price for Heavy Cleaning shall include the entire cost including but not limited to labor, mobilization and access, traffic control, appropriate disposal of sewer debris removed from sewer at permitted site and all other appurtenant work. Payment includes non-hydraulic jet efforts such as porcupines, cutters, power rodding, clam buckets, and other mechanical means, traffic control, and re-cleaning with hydraulic jet, labor, materials, and equipment necessary to clean mainline sufficiently to allow video reviewers a clear picture of pipe conditions.

No additional payment will be made for:
1. Additional passes of heavy cleaning if the inspection observation reveals roots, grease or other debris remaining in the sewer after the heavy cleaning passes.

6.03 PAYMENT WILL BE MADE UNDER:

Item No.	Pay Item	Pay Unit
00003-6.01	LIGHT CLEANING & MAINLINE CCTV INSPECTION FOR EACH DIAMETER	LF
00003-6.02	HEAVY CLEANING FOR EACH DIAMETER	LF

END OF SECTION 00003

CITY OF MEMPHIS – STANDARD CONSTRUCTION SPECIFICATIONS
SECTION 00004 - CLOSED CIRCUIT TELEVISION & SONAR INSPECTION OF LARGER DIAMETER SEWER MAINS

PART 1 – SCOPE

1.01 This Work will consist of assessment, Pipeline Assessment Certification Program (PACP) internal closed circuit television (CCTV), and Sonar surveys to digitally inspect and record conditions of existing sanitary sewer mains and connections in 24-inch and larger diameter sanitary sewer pipe and siphons. Larger diameter sewer pipes to be inspected are located in both improved streets, arterial and primary roads, backyards and unimproved easements. No cleaning of the sanitary sewer is required prior to CCTV and Sonar inspection.

1.02 The Work covered by this section includes furnishing all labor, competent PACP certified technicians, equipment, tools, accessories, and materials required to CCTV and Sonar inspect the designated 24-inch diameter and larger sanitary sewer lines.

1.03 PACP compliant inspections, logs, data, and photos shall be delivered to the Program Manager (from hereon Program Manager shall be interpreted as "Program Manager or his designee") on external hard drives which will become property of the Program Manager. Data files shall be formatted to facilitate upload into a PACP compliant exchange database or internet uploads formats to an FTP site approved by the Program Manager.

PART 2 – MATERIALS & EQUIPMENT

2.01 MATERIALS

A. Submittals

1. Unless otherwise specified all sample submittals shall be delivered to the Program Manager within two weeks of the NTP.
2. Traffic Control Plan shall be submitted to the Program Manager, including the following items:
   a. Outline of permit acquisition procedure for lane closures.
   b. Methods for proper signing and barricades, which comply with City of Memphis requirements.
   c. Major streets (e.g. Shelby County Principal Arterial & Minor Arterial) requiring a City approved permit if taking a lane for mobile operations, secured through Traffic Control Plan submittal to the City and signed by a TN P.E. The City requires two-week lead time for permit processing.
      i. The Contractor will be required to deliver a sample primary/arterial road Traffic Control Plan for review by the City.
      ii. If the City determines that the nature of the work operation or the type of road in which the Contractor is working requires a permit, the Contractor will be required to modify the sample Traffic Control Plan to obtain a permit from the City.
   d. For everywhere else where a permit is not required, the Contractor shall develop, provide, and implement a traffic control plan for all mobile operations in accordance with standard MUTCD specifications.
   e. The Contractor is also responsible for acquiring all necessary disposal and/or landfill site permits as required to perform this work.
   f. Railroad Rights of Way: The Contractor shall notify the Program Manager when work or access to manholes and sanitary sewers lie within the 25 feet of railroad easement as measured by 25 feet outside the nearest rail of the tracks. To access sewer facilities within the 25 feet of the railroad right of way the Contractor shall contact the Program Manager 48 hours in advance who will

alert the City's Zone Construction Inspector to coordinate individual railroad direction and guidance.

3. Site Contractor emergency phone numbers.
4. Schedules of work on a weekly basis that will be delivered no later than 2:00 PM on Thursday for the week following with daily AM email updates of approximate crew locations each day.
   a. Weekly schedule format shall contain the following elements:
      i. Map format.
      ii. Sufficient streets labeled and identified at a scale to provide clarity.
      iii. Nature and type of crew location by map area.
5. Permit required confined space entry plans in compliance with the Loss Control Manual.
6. Copies of National Association of Sewer Service Companies (NASSCO) certification for all field staff conducting PACP inspections.
7. Sample of PACP compliant television survey log in MS Access format.
8. Sample of PACP compliant video inspection in MP-4 format.
9. CCTV and Sonar inspection vehicle and equipment supplies list.
10. Sample of combined CCTV & Sonar inspection report.

2.02 EQUIPMENT

A. General

1. All equipment used for PACP compliant CCTV sewer segment inspections of existing larger diameter sanitary sewer mains shall be specifically designed and manufactured for the purpose intended under this Contract. The software and hardware for the electronic capture of the inspection defects and recorded observations must be Version 6.0.1 NASSCO PACP compliant.
2. All CCTV equipment requirements contained in Section 00003 – Closed Circuit Television Inspection of Sewer Mains & Connections, Paragraph 2.02 are applicable, except 2.02.D. Cleaning Equipment since pre-cleaning of the larger diameter sewers is not required.

PART 3 – CONSTRUCTION REQUIREMENTS

3.01 CCTV & Sonar Inspection of Sewer Mains

A. Sewer Flow Levels During Inspection Operations

1. Maintain low sewer flow during inspection by using sandbags or flow-through plugs or by inspecting during low flow times of day, evening or early morning hours while camera is moving and recording observations in the sewer segment. Any items used to restrict flow shall be removed immediately after intended use.
   a. Flow-through Plugs: If used, secure the plugs so as to remain in place during inspection. Use a fail-safe device at the downstream pipe connection to ensure the plug is not lost in the downstream sewer segment if it becomes dislodged from the upstream pipe connection.
   b. Conduct all cleaning and CCTV operations to prevent building backups and sewer overflows.
   c. Contractor shall be responsible for cleanup, repair, fines, property damage costs, and claims for any sewage backup, spillage or sanitary sewer overflow during or as a result of the cleaning and inspection operations.
2. Allowable Depth of Flow For Inspection Operations:

a. For effective inspection, all flow shall be minimized in the segment being inspected. However, the depth of flow at the upstream manhole of the interceptor section being worked shall be within the specified limits provided herein.

3. Maximum Allowable Depth of Flow for CCTV Inspection
   a. 24-inch diameter and Larger Pipe - 30% of pipe diameter. Flow in excess of the 30% depth of flow limitation shall include the provision for Sonar inspection for below the water surface level in addition to a raft mounted CCTV inspection for above the water level.
   b. Exceptions to these guidelines shall result in rejection, and non-payment, of the CCTV inspection unless approved in advance by the Program Manager.

B. Camera Operations

1. When flow is in excess of the 30% depth of flow limitation, the Contractor shall include the provision for Sonar inspection for below the water surface level in addition to a raft/float mounted CCTV inspection for above the water level.
2. Raft/float supports shall be collapsible to fit through existing manhole frames associated with 24-inch diameter and larger sewers.
3. Camera Operations requirements shall be as contained in Section 00003 – Closed Circuit Television Inspection of Sewer Mains & Connections, Paragraph 3.01 are applicable for the execution of the CCTV operations with the camera mounted on a raft or float, except as modified below.
4. Contractor shall be responsible for all judgments and impacts as to whether an obstruction in the sewer main can be passed. Costs involved in extracting a stuck camera in the sewer main will be borne by the Contractor and at no additional cost to the Program Manager.

C. Camera & Sonar Combined Operations

1. The combination CCTV and Sonar equipment shall be capable of inspecting a length of sewer up to at least 1,000 linear feet when entry into the sewer may be obtained at each end and up to 750 feet where a self-propelled unit is used and where entry is possible from one end only.
2. Each inspection unit shall contain a means of transporting the CCTV camera or Sonar equipment in a stable condition through the sewer under inspection. Such equipment shall ensure the maintained location of the CCTV camera and Sonar equipment when used independently on or near to the central axis of a circular shaped sewer. The maximum allowable flow depth that is permissible for the combination Sonar/CCTV is equal to 75% of the pipe diameter.
3. Where the CCTV camera or Sonar head are towed through the sewer, all winches shall be stable with either lockable or ratcheted drums. All connection shall be steel or of an equally non-elastic material to ensure the smooth and steady progress of the CCTV camera or Sonar equipment through the surcharged sewer. All winches shall be inherently stable under loaded conditions.
4. Each inspection unit shall carry sufficient numbers of guides and rollers such that, when inspecting, all connecting materials are supported away from pipe and manhole structures and all CCTV & Sonar lines used to measure the CCTV camera and the Sonar head location within the sewer are maintained in a taut manner and set a right angles where possible, to run through or over the measuring equipment.
5. The CCTV Camera and Sonar head shall be positioned to reduce the risk of picture distortion. In circular sewers the CCTV camera lens and/or Sonar head shall be positioned, when possible, centrally within the “dry” area for the CCTV and centrally within the “wet” area for the Sonar head. In non-circular sewers, picture/sonar image

orientation shall be taken at mid-height, unless otherwise agreed, and centered horizontally. In all instances the camera/sonar lens shall be positioned looking along the axis of the sewer. A positioning tolerance of + 10% of the vertical sewer dimension shall be allowed.

6. When the scanning Sonar is deployed, either stand alone or combined with CCTV, the speed or travel shall be limited to 4 inches per second or 20 feet per minute.
7. A General Condition 360° CCTV rotational scan must be implemented at every 50 feet interval (min) along sewers, and at all manholes and all salient, specified, defect features. More frequent scans must be made should the condition of the pipe differ from the previous scan. The tilt must not be less than 225°.
8. The color palette shall have a minimum of 16 colors with text. The Sonar image, inside the viewing area shall be in color.
9. The picture update speed shall not result in unsatisfactory picture resolution. The range of resolution shall be 1/10 inch.
10. The maximum beam width of Sonar energy pulse shall be no greater than two degrees from the center of the transducer.
11. The transducer shall be of the continuous scanning type, the speed of which shall be 1 second per 360° scan.
12. The Contractor is responsible for hiring a licensed sub-contractor to retrieve any equipment/foreign objects that get stuck in the sewer system through the execution of the scope of work (fallen cameras, jet nozzles, inflatable plugs, sandbags etc.) at the Contractor's own cost. Such retrieval by an appropriately licensed sub-contractor shall be made within 72 hours to avoid interfering with the City of Memphis sewer system operations. Any and all impacts and related costs due to the Contractor's equipment in the line shall be the responsibility of the Contractor. Contractor shall follow SARP10 sewer point repair specifications outlined in "Section 02540 Sanitary Sewer Point Repairs" and "Section 02950 Removal and Replacement of Pavements and Incidentals" during retrieval of equipment. Also per "00585.2.2 Safety, Health, and Accident Prevention Program", Purchaser must approve sub-tier contractors prior to mobilization to the jobsite.

D. Quality Assurance

1. QA/QC shall be as contained in Section 00003 - Closed Circuit Television Inspection of Sewer Mains & Connections, Paragraph 3.01.D. Quality Assurance.

E. Deliverable Documentation

1. Mainline Sewer:
   a. Submit V.6.0.1 PACP compliant records, logs, and electronic inspection data for sewer line inspection to Program Manager by the close of business on the Monday following a week after data acquisition
   b. Digital videos, data, and photos shall be delivered to the Program Manager on external hard drives which will become property of the Program Manager.
   c. Data files shall be formatted to facilitate upload into a PACP Database with the approval of the Program Manager.
   d. Inspections displaying poor digital video/audio quality will be rejected. Quality refers to, but is not limited to, grease or debris on lens, camera under water, image too dark, image washed-out, distorted image, or out of focus images, lines improperly cleaned, and poor/no audio.
      i. Contractor will re-televise rejected inspections and resubmit inspections at no additional cost to the Program Manager.
2. Map changes/undocumented manholes:

a. For map changes identifying undocumented manholes and network changes which were found as a result of field inspections or observations, a Map Edit Form shall also be prepared and supplied by the Contractor with a drawing or sketch and shall indicate special details, field measurement or distances, or locations about an observed undocumented manhole or a change to the sewer network. The Map Edit Form should also identify buried manholes and siphons that have been encountered.

b. Contractor shall indicate all buried manholes identified in the field via Sonar/CCTV using the provided Buried Manhole Form. Any additional manholes that have not been located or verified via Sonar/CCTV but are impeding the completion of required Sonar/CCTV work should be designated as unable to locate (UTL) and be included on the form.

3. Sonar Reports

a. The Contractor shall submit two hard copies of all details, i.e. a typed "Full Detail" report for each inspection, showing the position and full text of each defect encountered and their grades. The Contractor shall also supply an overall Summary Report detailing major defects and those inspections that require attention along with a statistical report showing lengths of sewers inspected and a breakdown of sizes and lengths inspected.

b. The Contractor shall supply a MS ACCESS database and free issue software for both the viewing of the media files and the Sonar images from within the database.

c. The Sonar Inspection shall include complete structural and service assessment to the equivalent PACP standard as that obtained through conventional CCTV imagery.

d. The Sonar inspection shall include measurement of flow depth and debris/silt depth.

e. A Color High Resolution Sonar image of cross sections of the sewer must be taken (saved) every 50 feet or more frequently should the internal profile or debris/silt depth of the sewer change from the previously saved image.

f. These images are to be cross-referenced to the reports and database(s) for ease of retrieval.

PART 4 –DELIVERABLES

4.01 RECORDS

A. Digital Inspection Record

In the digital PACP V.6.0.1 compliant format, the Contractor shall provide the following information:

1. Digital CCTV survey and Sonar inspection which shall be recorded and shall be continuous as the inspection proceeds through the manholes and sewer pipes.
2. Digital Recordings: The digital recording shall document the visual and audio record of the sewer pipe inspection and shall be the basis of measurement and payment. Digital recording playback shall be at the same speed that it was recorded. Original digital recordings for the Project shall be forwarded to the Program Manager on clearly labeled external hard drive(s) in PACP ACCESS format with final report submittals and shall become the property of the Program Manager. Data for a single facility asset will not be split across multiple hard drives. Digital recordings shall be available to the Program Manager by the close of business on the Monday following a week after data acquisition. File naming must be consistent. Additional

instructions, naming conventions, file structures, etc. will be provided after contract award.

a. Picture Quality: The sewer inspection digital record shall be free of steam, fog, vapor, or other headspace distortion that degrades the quality of the picture from the intended purpose of evaluating the sewer for structural and watertight integrity. If necessary, the Contractor shall provide positive ventilation or other means through the sewer pipe to draw out steam, fog, and vapor that will degrade the recorded image of the pipe.

B. Inspection Documentation Logs

1. CCTV Records

a. Observations made during television inspection shall be documented in an unmodified PACP compliant manner within an electronic inspection log form, supported by accompanying audio, digital photographs and MP-4 (web optimized) format recording written to an external hard drive and submitted to the Program Manager. Hard copies of completed inspection log photographs shall be furnished to the Program Manager with invoicing.

2. Sonar Records

a. Where combined CCTV and Sonar inspections are performed, the display in the viewing area shall show the combined CCTV and Sonar images of the sewer being inspected. The Sonar image shall be superimposed on the real CCTV image, and continuously recorded, as a combined operation at the time of the inspection resulting in a single combined video file in MP-4 (Web optimized) format for each inspection.

b. The Sonar Inspection shall include a comprehensive final report on the findings concerning major defects including fractures, displaced joints, deformation, corrosion, lateral intrusions, dominant surface features, encrustation, and debris/silt depths.

C. Electronic & Hard Copy Records

1. Reports: The Contractor shall prepare printed inspection log reports for each associated sewer pipe inspected during the actual field inspection activities. These field logs shall then be reviewed by the Contractor's technical staff, along with reviewing the associated digital video record, as a means of ensuring that no defects or entries are omitted or incorrect. Edited field logs shall then be used in the final project reports and submitted in pdf format.

2. Draft Report and Final Report: The Draft Final Report will contain electronic and hard copies of each of the PACP CCTV log pipe segment inspection logs. Digital recordings of the inspections written to an external hard drive and the PACP compliant database of the inspections in ACCESS format shall also be submitted in electronic and pdf format.

Draft Report shall be delivered to the Program Manager within fifteen working days of oldest inspection. The Program Manager will have two workweeks to review and comment. The Contractor shall address all comments provided and submit a Final Report within one workweek upon receipt of comments. At the Program Manager's

discretion a meeting will be held so the Contractor can explain the processes used to address the comments.

D. Meetings

The Program Team will arrange bi-weekly meetings (every other week) with the contractor to discuss data management and field issues.

E. Quality

Rejection of deliverables will be submitted to the Contractor via the Program Team in a written communication discussing issues that must be addressed. The Contractor will be required to follow up with a response within three business days upon receipt of the written communication. Contractors will have seven (7) calendar days from the rejection notice date to make the necessary corrections and resubmit the data deliverable in its entirety.

PART 5 – MEASUREMENT

5.01 CCTV & SONAR INSPECTION

CCTV & Sonar inspection shall be measured by linear foot by each diameter of mainline sewer inspected and documented in accordance with the specification.

PART 6 – PAYMENT

6.01 CCTV & SONAR INSPECTION

CCTV & Sonar inspection shall be paid for at the unit price for each linear foot of each diameter inspected and documented in accordance with the specification.

The unit price for CCTV & Sonar inspection shall cover the entire cost of the required CCTV & Sonar inspection and reporting in accordance with PACP V 6.0.1 format, including but not limited to labor, mobilization and access, CCTV equipment, recording media, traffic control, light cleaning of mainline sewer, documenting results in PACP records and logs, digital format recordings, photo equipment, power supply for equipment, interim and final reports, and all other appurtenant work.

No additional payment will be made for:
1. Re-inspection due to rejected inspection and/or records for any reason
2. Incomplete electronic logs for either CCTV or Sonar digital records

6.02 PAYMENT WILL BE MADE UNDER:

Item No.	Pay Item	Pay Unit
00004-6.01	CCTV & SONAR INSPECTION FOR EACH DIAMETER	LF

END OF SECTION 00004

PART 1 – SCOPE

1.01 This work consists of the repair and rehabilitation of manholes for sanitary sewers as shown on the Plans, stipulated in the Contract Documents, or as directed by the Purchaser. The construction will be accomplished by these Specifications and in conformity with the details shown on the Plans or established by the Purchaser. The Subcontractor shall perform all work necessary to complete the Contract with the best modern practice. Unless otherwise provided, the Subcontractor is required to furnish all labor, materials, equipment, and incidentals required to rehabilitate or repair manholes as noted on the Drawings or directed by the Purchaser.

1.02 Accurately field measure and size each individual manhole. Each existing sewer manhole designated to be repaired or rehabilitated may have a different configuration and varying field dimensions.

1.03 Each manhole to be rehabilitated shall be thoroughly cleaned and then inspected for loose or missing bricks, loose mortar, holes, etc. All leaks shall be plugged prior to manhole rehabilitation.

1.04 The presence or absence of leakage through manhole walls noted on the manhole inspection reports and as seen in the Subcontractor's independent manhole inspections prior to bidding or construction depend on the groundwater levels and conditions at the time of the inspections. High groundwater levels in the project area typically occur in the dormant season (December through May), but will vary with rainfall in any given year and sewer location. Be advised the groundwater currently entering the leaking sewer mains and laterals may migrate to the manholes after the sewer mains and laterals are rehabilitated or replaced. Reflect assumptions and judgments on leakage through manhole walls based on this information in the unit prices bid for lining manholes. All leakage shall be stopped prior to lining manholes. No additional payment will be made for repairing leaks not visible prior to bidding or sewer rehabilitation.

1.05 When applicable, the manhole lining shall not be installed until all main sewer lining and other manhole rehabilitation work is complete.

1.06 Where existing manholes are being repaired or rehabilitated, the Subcontractor will arrange his work so that sewage flow will be maintained during the construction period with no discharge of sewage into the open trench, and no backup of sewage into the existing line. The subcontractor will provide necessary bypass pumping capacity to carry flow downstream of the manhole to be rehabilitated or repaired.

1.07 Replacement Manholes shall conform to Specification Section 02531.

1.08 Cast iron frames shall be set at the required elevation and properly bonded to the flat top, eccentric cone, or grade rings with two rings of butyl mastic sealant and anchor bolts.

1.09 Definitions/Standards:
ASTM D-638: Test Method for Tensile Properties of Plastics.
ASTM D-695: Test Method for Compressive Properties of Rigid Plastics.
ASTM D-790: Test Methods for Flexural Properties of Unreinforced and Reinforced Plastics and Electrical Insulating Materials.
ASTM D-4541: Standard Test Method for Pull-Off Strength of Coatings Using Portable Adhesion Testers
ASTM D-412: Standard Test Methods for Vulcanized Rubber and Thermoplastic Elastomers—Tension
ASTM D-2240: Standard Test Method for Rubber Property Durometer Hardness
ASTM D-522: Standard Test Methods for Mandrel Bend Test of Attached Organic Coatings

1.10 Quality Assurance. Furnish materials of quality required by the American Society for Testing and Materials (ASTM) standards and industry approved standards and specifications. Provide guarantee against defective materials and workmanship in accordance with the requirements of these specifications.

1.11 Sequencing. All required interruptions of flow through manholes or any other portion of the sanitary sewer system shall be coordinated with the Owner, and approval must be received from the Owner prior to the interruption.

1.12 When rehabilitating manholes, the material for stopping active leaks and repairing nonleaking holes, cracks, etc. in concrete and masonry manholes shall be compatible with the coating used for rehabilitation.

1.13 Substitutions. Should the Subcontractor wish to use any brand or type of material other than as specified herein, he shall so state in writing to the Purchaser naming the proposed substitution and manufacturer. This statement shall be accompanied by a certificate of compliance from an approved independent testing laboratory that the proposed substitute meets or exceeds the specified requirements and has been tested in accordance with the specified test standards. The statement shall also include documented proof that the proposed brand or type of material has a proven record of performance when used in the intended application as confirmed by actual field test or successful installations.

1.14 The Subcontractor shall apply the manhole lining system material on a sample area not less than four square feet (4 ft^2) in size. When approved, the sample area shall serve as a standard of acceptance for all further work.

PART 2 - MATERIALS AND EQUIPMENT

2.01 MATERIALS

A. Submittals

1. Unless otherwise specified all sample submittals shall be delivered to the Purchaser within two weeks of the NTP.

2. Site Subcontractor emergency phone numbers.

3. Schedules of work on a weekly basis that will be delivered no later than 2:00 PM on Thursday for the week following with daily AM email updates of approximate crew locations each day. Weekly schedule format shall contain a map, with sufficient streets labeled and identified at a scale to provide clarity, along with the nature and type of crew located by map area.

4. Product Data on the following:
   - Crack and hole repair products.
   - Cementitious plug material.
   - Frame and cover seals.
   - Cementitious coating system including application requirements and chemical resistance data..
   - Gasket Polymer Properties

5. Manufacturer's Certificate of Compliance for each type of product that product furnished meets requirements of this Section.

6. Manufacturer's written recommendations for product handling and installation.

7. Confined space entry plans.

8. Plan for diversion of flow during installation of manhole over existing piping.

9. Subcontractor shall submit to the Purchaser (when requested) evidence indicating that the proposed applicators are fully qualified to perform the work, and any proposed applicator found to be not qualified shall (at the written request of the Purchaser) be removed forthwith by the Subcontractor.

10. Furnish an extended warranty for manhole rehabilitation materials and workmanship from the Subcontractor and liner manufacturer for a total of 5 years from date of final completion.

B. Manhole Lining System. Spray applied or centrifugally cast lightweight structural reinforced cement manhole coating:

1. The material applied onto the surface of brick or precast manholes shall be a cementitious system formulated for application within a sanitary sewer environment. For concrete manholes in good structural condition, install the lining to a minimum ½-inch thickness. For all other concrete manholes and for all brick manholes, install the lining to a minimum 1-inch thickness. The coat of material will be used to smooth the walls, benches, and inverts of the manhole and, as necessary, prepare the manhole for a final coat of a urethane or epoxy resin system. When a urethane or epoxy resin system is used, the base coat (cementitious layer) will be 1/2-inch for epoxy systems and 1/8-inch thick for urethane systems. Subcontractor can request to not use a base coat but must provide to the Owner and Purchaser evidence of successful installations of the product without using a base coat and its capability to properly adhere to the manhole wall and form a smooth finish on the wall, bench, and invert. In cases where the base coat is not used, the thickness of the top coating will be increased by the base coat thickness listed above.

2. The material applied to the surface of the manhole shall be a cementitious blend of acid resistant binders, siliceous aggregates, non-metallic fibers and other additives for constructing a coating that is impervious to the flow of water, is resistant to sulfide attack, and restores structural integrity to existing manhole walls. The product shall be Quadex QM-1S Restore; Permacast MS-10,000; Mainstay ML-72; Reliner MSP Cement manufactured by Standard Cement Materials, Inc.; Strong Seal MS-2A; or approved equal, unless otherwise specified for urethane or epoxy resin coating top coat.

3. A monolithic liner shall be formed which covers all interior manhole surfaces and shall have the following minimum requirements at 28 days:

Compressive Strength (ASTM C-579B) 3000 PSI
Tensile Strength (ASTM C-496) 300 PSI
Flexural Strength (ASTM C-293) (Modified) 600 PSI
Shrinkage (ASTM C-596) 0% at 90% R.H.
Bond (ASTM C-321) 130 PSI
Density, when applied 105 ± PCF

4. The installer shall warrant and save harmless the Owner and his Purchaser against all claims for patent infringement and any loss thereof. The Subcontractor shall handle and store all material and shall dispose of all wastes in accordance with applicable

regulations.

5. Each system shall be designed for application over wet (but not active running water) surfaces without degradation of the final product and the bond between the product and the manhole surfaces. Active leaks shall be stopped using a premixed fast-setting, volume-stable waterproof cement plug consisting of hydraulic cement, graded silica aggregates, special plasticizing and accelerating agents. It shall not contain chlorides, gypsum, plasters, iron particles, aluminum powder or gas-forming agents, or promote corrosion of steel it may come in contact with. Set time shall be approximately 1 minute. Ten-minute compressive strength shall be approximately 500 PSI.

1. All invert channels shall be coated with cementitious mortar to prevent infiltration and to build up the invert channel to the new sewer main invert elevations; to fill all voids, cracks, holes, etc.; and to form a smooth flow channel. The entire channel shall be coated. The coating shall be a minimum ¼- to ½-inch thick.

C. Mortar

1. Mortar shall be composed of one part Portland cement and two parts sand (volumetric measure) thoroughly mixed in a tight box, with water added gradually and mixed continually until mortar has attained the proper consistency for use in brick masonry; prepared only in such quantities as needed for immediate use; mortar mixed for more than 30 minutes, retempered, or previously set will not be allowed.

D. Butyl Mastic Sealant

1. The sealant shall be used when joining the casting frame to the precast manhole and for all manhole adjustments to provide a watertight structure. The sealing compound shall be produced from blends of refined hydrocarbon resins and plasticizing compounds reinforced with inert mineral filler, and shall contain no solvents, irritating fumes, or obnoxious odors. The compound shall not depend on oxidizing, evaporating, or chemical action for its adhesive or cohesive strength. It shall be supplied in extruded rope form of suitable cross section and in such sizes as to seal the joint space. Use two complete ropes at each joint. The sealing compound shall be protected by a suitable removable two-piece wrapper, which shall be designed so that half may be removed longitudinally without disturbing the other half in order to facilitate application of the sealing compound. The sealant shall also meet the requirements of the following table:

Composition	**Test Method**	**Minimum**	**Maximum**
Bitumen (Petroleum Plastic Content	ASTM D4	50	70
Ash Inert Mineral Matter	AASHTO T11	30	50
Volatile Matter	ASTM D6	---	2.0
Property	**Test Method**	**Minimum**	**Maximum**

Specific Gravity at 77 degrees F	ASTM D71	1.2	1.3
Ductility at 77 degrees F(cm)	ASTM D113	5.0	---
Softening Point	ASTM D36	320 degrees F	---
Penetration 77 degrees F (150 gms) 5 sec.	ASTM D217	50	120

2.02 EQUIPMENT

A. The Subcontractor will furnish and maintain in good condition all equipment and facilities as required for the proper execution and inspection of the Work. All equipment and facilities will be on site and approved by the Purchaser before work will be permitted to begin.

PART 3 – CONSTRUCTION REQUIREMENTS

3.01 PRELIMINARY AND GENERAL ITEMS

A. Notify all property owners who discharge sewage directly to the manhole being surface that their service will be discontinued while the lining is being placed, cured, and active pipe and service connections reopened. The Subcontractor shall notify individual property owners at least 72 hours in advance, giving the date, start time, and estimated completion time for the work being conducted. This notification shall be coordinated with the door hanger distribution.

B. Traffic Control

1. All traffic control shall be installed and maintained in accordance with the Manual on Uniform Traffic Control Devices (MUTCD). At a minimum, the Subcontractor must have two trucks with flashing yellow lights on the work site. Traffic cones must also be placed downstream of the construction site to divert cars into the adjacent lane(s) per MUTCD requirements. On roads with heavy traffic volume, a flagman may also be needed to assist with traffic control. For bidding purposes, the Subcontractor should assume that a flagman will be needed on 30 percent of the setups.

C. Fall Protection

1. Subcontractor shall install and maintain all fall protection measures in accordance with the SARP10 Loss Control Manual. The Subcontractor shall construct a controlled access zone around the manhole being adjusted. At a minimum, the fall protection zone shall include traffic cones encircled with pennant tape. The controlled access zone must have one point of access with an entrance log.

D. Cleaning

1. All manholes to be rehabilitated shall be thoroughly cleaned before rehabilitation. All grease, oil, laitance, coatings, loose bricks, mortar, unsound concrete and other foreign materials shall be completely removed. Debris resulting from cleaning shall be removed from the manhole and not allowed to be carried downstream.

E. Flow Control:

1. The Subcontractor shall be responsible for plugging or diverting the flow of sewage as needed for repair and coating of manhole inverts and benches.

3.02 MANHOLE REHABILITATION – CEMENTITIOUS LINERS

A. The surface prior to spraying shall be damp without noticeable water droplets or running water. Materials shall be spray applied to a minimum uniform thickness to ensure that all cracks, crevices, and voids are filled and a smooth surface remains after light troweling. Perform light troweling to compact the material into voids and to set the bond.

B. The first application shall have begun to take an initial set (disappearance of surface sheen which could be 15 minutes to one hour depending upon ambient conditions) before the second application to ensure a minimum total finished thickness of 1/2 inch. The final finished thickness may need to be greater than 1/2 inch as recommended by the manufacturer to withstand groundwater pressures. A depth gauge shall be used during application, at various locations, to verify the required thickness. The surface then shall be trowelled to smooth finish with care taken not to over trowel so as to bring additional water to the surface and weaken it. Manufacturer's recommendation shall be followed whenever more than 24 hours have elapsed between applications.

C. The bench covers used to catch debris shall be removed and the bench and invert sprayed such that a gradual slope is produced from the walls to the invert with the thickness at the edge of the invert being no less than 1/2 inch. The wall-bench intersection shall be rounded to a uniform radius the full circumference of the intersection.

D. No application shall be made to frozen surfaces or if freezing is expected to occur within the manhole for 24 hours after application. If ambient temperatures are in excess of 95°F, precautions shall be taken to keep the mix temperature at time of application below 90°F, using ice if necessary.

E. The final application shall have a minimum of four (4) hours cure time before subjected to actual flow.

3.03 INVERT AND BENCH REPLACEMENT

A. Remove all loose grout and rubble from existing channel. Rebuild channel, if required, by reshaping, repairing slope of shelves or benches. Work shall include aligning inflow and outflow ports in such a manner as to prevent the deposition of solids at the transition point. All inverts shall follow the grades of the pipe entering the manhole. Changes in direction of the sewer and entering branch or branches shall have a true curve of as large a radius as the size of the manhole will permit, but shall be shaped to allow easy entrance of maintenance equipment including buckets, T.V. camera, etc.

B. Where noted on Drawings or directed by the Purchaser, replace the invert and benching. Remove existing invert and bench and reconstruct with concrete conforming to Section 03050 Portland Cement Concrete.

C. Manhole inverts shall be constructed to conform to flow-through sewers sizes and shapes. At changes in directions, the inverts shall be laid out in curves of the longest possible radii tangent to the sewer pipes' centerline. Benches shall be constructed to the

highest pipe crown elevation and sloped to drain toward the flow-through channel.

D. Apply a ½ inch finished thickness of cementitious liner material over the surface of the replaced invert and bench. Allow the liner material to cure for a minimum of four hours before being subjected to flow.

3.04 RESET AND RESEAL MANHOLE FRAME AND COVER, REINSTALLATION OR REPLACEMENT

A. If the existing manhole frame is misaligned on the manhole, the Subcontractor shall remove the existing manhole frame and cover and, if they are not being reused, dispose of them as required by the Purchaser. It shall be the responsibility of the Subcontractor, at no additional cost to the Purchaser, to repair any damage to the chimney or corbel caused by the removal of the existing manhole frame. Existing frames and covers that are to be reused shall be thoroughly cleaned before reinstallation.

B. If the manhole frame is to be raised, the work shall be performed in conformance with Section 02532 of the City of Memphis Standard Construction Specifications modified by the SARP10 Program.

C. The manhole frame for the cover shall be set on the manhole sidewall in a full bed of flexible butyl resin gasket material at the required elevation. In addition, the frame shall be bolted to the grade rings. Where manholes are constructed in paved areas or fill slopes, the surface of the frame and cover shall be tilted so as to conform to the exact slope, crown, and grade of the existing pavement or area adjacent thereto.

D. Any new manhole frame and cover replacement shall result in a minimum 24 inches diameter clear opening to the manhole.

3.05 DROP CONSTRUCTION FOR EXISTING MANHOLES

A. Drop construction will be installed in existing manholes at the locations shown on the plans and/or as directed by the Purchaser. Drop construction will conform to the details shown on the Drawing for inside drop construction. The Subcontractor will cut a hole in the manhole wall to permit inserting the inlet pipe at the required flow line elevation, horizontal angle, and slope, and to allow two (2) inches space around the pipe for bedding and filling solidly with nonshrinking grout. Care will be used to avoid unnecessary damage to the existing masonry or concrete.

B. All loose material will be removed from the cut surfaces, which will be completely coated with grout before setting the pipe. Before inserting the pipe and flexible connector, a sufficient thickness of grout will be placed at the bottom and sides of the opening for proper bedding of the pipe. After setting, all spaces around the pipe will be solidly filled with grout and neatly pointed up on the inside to present a smooth joint, flush with the inner and outer wall surface. Any necessary modifications to the existing invert will be made to provide a smooth, plastered surface for properly channeled sewage flow from the new connection. All drop construction will be constructed of either ductile iron pipe with push on or mechanical joints or PVC pipe conforming to the appropriate section of these Specifications. Solvent cement joints may be used on PVC for drop construction. The vertical drop construction will have the dead weight held by suitable means until the steel support straps are secured in place and tightened. The pipe mechanical joint bolts, if used, will not be positioned against the manhole wall. The steel support straps will be fastened to the manhole wall with two bolts per strap set in expansion sleeves in drilled holes.

3.06 MANHOLE REHABILITATION ACCEPTANCE

A. After the manhole rehabilitation work has been completed, the manhole shall be

visually inspected by the Subcontractor in the presence of the Purchaser's Representative and the work shall be accepted if found satisfactory to the Purchaser's Representative. The finished surface shall be free of blisters, "runs" or "sags" or other indications of uneven coating thickness. No evidence of visible leaks shall be allowed.

B. Vacuum Testing will be required for all manholes that receive a cementitious liner. The vacuum testing method shall be conducted as follows:

1. Subcontractor shall plug all pipe openings, taking care to securely brace the plugs and the pipe. The plugs shall be placed a minimum of 6 feet beyond the manhole wall.

2. With the vacuum tester in place, inflate the compression to affect a seal between the vacuum base and the structure. Connect the vacuum pump to the outlet port with the valve open and evacuate the manhole to 10 inches Hg (0.3 bar) for 48 inch diameter manholes and 5 inches Hg (0.15 bar) for 60-inch and greater diameter manholes.

3. Close vacuum inlet/outlet ball valve, disconnect the vacuum pump, and monitor the vacuum for the specified time period. If the vacuum does not drop in excess of 1 inch Hg over the specified time period, the manhole if considered acceptable passes the test. If the manhole fails the test, identify the leaking areas by removing the head assembly, coating the interior surfaces of the manhole with a soap and water solution, and repeating the vacuum test for approximately thirty seconds. Once the leaks have been identified, complete all necessary repairs by sealing the leaks of the manhole to the satisfaction of the Purchaser's Representative, and repeat test procedures until satisfactory results are obtained.

Vacuum Test Timetable

Depth (Feet)	**Manhole Diameter (Inches)**		
	48"	**60"**	**72"**
4'	10 sec.	13 sec.	16 sec.
8'	20 sec.	26 sec.	32 sec.
12'	30 sec.	39 sec.	48 sec.
16'	40 sec.	52 sec.	64 sec.
20'	50 sec.	65 sec.	80 sec.
24'	60 sec.	78 sec.	96 sec.
*	5.0 sec.	6.5 sec.	8.0 sec.

*Add extra testing time "T", for each additional 2-foot depth. (The values listed above have been extrapolated for ASTM designation C924-85.

4. The Purchaser reserves the right to reject any and all manholes that do not pass vacuum testing requirements, and replacement shall be at the Subcontractor's expense. A significant number of leaks on a single manhole or significant number of manholes leaking shall be considered as a basis for rejection and replacement of manholes.

3.07 WARRANTY AND GUARANTEE FOR REHABILITATED MANHOLES

A. The Subcontractor shall guarantee the rehabilitated manholes for ten (10) years after acceptance by the Purchaser to the extent that he will repair any leaks that may appear in them during this period because of faulty workmanship or materials furnished by him at no additional expense to the Owner.

PART 4 – DELIVERABLES

4.01 Provide post-rehabilitation MACP inspection for each manhole. Refer to Section 00001 Manhole GPS & MACP Inspection.

PART 5 – MEASUREMENTS

5.01 CEMENTITIOUS MANHOLE LINING

A. Cementitious lining shall be measured per vertical foot of manhole from the downstream invert up to the bottom of the frame casting.

5.02 TRAFFIC CONTROL

A. Traffic control will be paid per each manhole rehabilitated.

5.03 SEWER MANHOLE DROP CONSTRUCTION

A. Drop construction in existing manholes will be measured per vertical foot as measured from the upper inlet pipe flowline to the flowline of drop pipe elbows at the bottom of the drop construction.

5.04 INVERT AND BENCH REPLACEMENT

A. Invert and bench replacement will be measured per each.

5.05 RESET AND RESEAL MANHOLE FRAME AND COVER, REINSTALLATION OR REPLACEMENT

A. Manhole frame and cover rehabilitation shall be measured per each.

5.06 DEWATERING

A. Dewatering is considered to be an incidental to sewer manhole rehabilitation.

5.08 BYPASS PUMPING

A. Bypass pumping is considered to be an incidental to sewer manhole rehabilitation.

PART 6 – PAYMENT

6.01 CEMENTITIOUS MANHOLE LINING

A. Cementitious lining of manhole shall consist of surface preparation, sprayed on lining, removal and disposal of manhole steps, and vacuum testing.

6.02 TRAFFIC CONTROL

A. Traffic control will be paid per each manhole rehabilitated including all appurtenances required to comply with MUTCD standards.

6.03 SEWER MANHOLE DROP CONSTRUCTION

A. The accepted quantities of sewer manhole drop construction will be paid for at the contract unit price per vertical foot, complete in place for drop construction in new manholes or drop construction in existing manholes, which will be full compensation for materials and materials testing, excavation, special protection, maintenance of sewage flow during construction, construction of drop pipe, pipe fitting and connections, installation of steel support straps, placement, curing, and protection of concrete from the manhole base to the top of drop construction, cleaning and inspection, and backfilling outside of pavement areas. Payment for drop construction for new manholes will be in addition to payment for standard depth manhole and extra depth construction (if required).

6.04 INVERT AND BENCH REPLACMENT

A. The accepted quantities of invert and bench replacement will be paid for at the contract unit price per each. It shall include all work and material to install new inverts in existing manholes, as directed by the Purchaser.

6.05 RESET AND RESEAL MANHOLE FRAME AND COVER

The accepted quantities for frame and cover rehabilitation will be paid for at the contract unit price per each.

6.07 PAYMENT WILL BE MADE UNDER:

Item No.	Pay Item	Pay Unit
00009-6.01	CEMENTITIOUS MANHOLE LINING	VF
00009-6.02	TRAFFIC CONTROL	Each
00009-6.03.01._____	In. Diameter Drop Construction in Exist Manhole	VF
00009-6.04	INVERT AND BENCH REPLACEMENT	Each
00009-6.05	RESET/RESEAL MANHOLE FRAME AND COVER	Each

END OF SECTION 00009

CITY OF MEMPHIS – STANDARD CONSTRUCTION SPECIFICATIONS modified by SARP10 Program
SECTION 02532 SANITARY SEWER MANHOLE ADJUSTMENT

PART 1 – SCOPE

This Work shall consist of locating and the adjustment of existing sanitary sewer manhole frames and covers as necessary to conform to the existing street grades or as directed by the Purchaser and in accordance with these Specifications.

PART 2 - MATERIALS AND EQUIPMENT

2.01 MATERIALS

A. Mortar

1. Mortar shall be composed of the following mixtures by volume: one part Portland cement, two parts sand, hydrated lime not to exceed 10 percent of the cement used, and four parts water. All ingredients shall be proportioned by measurement and not by estimation. All hydrated lime shall be as specified by ASTM C 6.

2. The mortar shall be hand mixed or machine mixed. In the preparation of hand mixed mortar, the sand, cement and hydrated lime shall be thoroughly mixed together in a clean, tight mortar box until the mixture is of uniform color, after which water shall be added. Machine mixed mortar shall be prepared in an approved mixer and shall be mixed not less than 1 ½ minutes. Mortar shall be used within 30 minutes after mixing.

B. Brick

1. All brick shall conform to the Specifications for Concrete Building Brick, ASTM C55 for Grade A. Bricks shall conform to the following dimensions, unless otherwise approved by the Purchaser.

	Depth Inches Inches	Width Inches	Length
Standard Size	2 ¼	3 ¾	8
Allowable Variation	+ ¼	+ ¼	+ ½

2. All brick shall be new and whole, of uniform standard size and with substantially straight and parallel edges and square corners. Bricks shall be tough and strong and free from injurious cracks and flaws. Bricks shall be culled after delivery, if required, and all culls shall be removed
from the work site.

3. The Subcontractor may be required to furnish the Purchaser with at least five bricks of the character and make he proposes to use, at least one week before any bricks are delivered for use. All bricks shall be of the same quality as the accepted samples.

C. Portland Cement Concrete

Portland cement concrete for adjustment of precast or poured-in-place concrete manholes shall be in accordance with Section 03050 Portland Cement Concrete.

D. Steel Reinforcement

Deformed steel reinforcing bar and welded wire fabric shall be of the grades, sizes and dimensions and at the designated spacing's and locations as shown on the plans or as directed by the Purchaser.

E. Manhole Steps

Manhole steps shall be as specified in the City of Memphis Standard Construction Specifications.

F. Grade Adapter Ring

Grade adapter rings shall be of the standard Memphis type as manufactured by Memphis Machine Works, or equal. The City shall supply the Grade Adapter Ring. The Subcontractor shall make arrangements to secure the Grade Adapter Ring from the City.

G. Manhole Frame & Cover

Manhole Frame & Covers shall be of the standard Memphis type as manufactured by Memphis Machine Works, or equal. The City shall supply the Manhole Frame & Cover. The Subcontractor shall make arrangements to secure the Manhole Frame & Cover from the City.

H. Paving Materials

Flexible pavement (asphaltic concrete) and rigid pavement (Portland cement) shall be restored in kind using materials in accordance with Section 02950 Removal and Replacement of Pavements and Incidentals.

2.02 EQUIPMENT

All equipment necessary for the satisfactory performance of this work shall be on hand and available before Work will be permitted to begin.

PART 3 - CONSTRUCTION REQUIREMENTS

3.01 SITE PREPARATION AND RESTORATION

A. Rights-of-Way and Easements

1. Rights-of-way and/or easements as shown on the Plans and/or rights-of-way/easement plats are provided by the City to the Subcontractor for construction of sanitary sewer facilities. The Subcontractor will confine his construction activities to these areas. The Subcontractor will be responsible for obtaining written agreements for use of private property outside City acquired rights-of-way/easements for such purposes as storage of material and equipment and access to the construction site. The Subcontractor will immediately provide a copy of all such written agreements to the City and Purchaser upon obtaining the same.

B. Clearing of Rights-of-Way and Easements

1. The Subcontractor will confine his clearing of rights-of-way and easements to the least area necessary for construction of facilities shown on the Plans. The Subcontractor will protect as many trees and shrubs within the area as possible.

Where necessary for construction the Subcontractor will clear all live and dead vegetation and growth, pole stubs, logs, and other objectionable material. Cleared material will be removed to within 3 inches of existing ground. This work will be done well before excavation operations but only after erosion controls have been placed.

C. Location of Existing Obstructions

1. Locations of obstructions shown on the Plans are approximate and are not intended as an accurate location of such obstructions. Obstructions not shown on the Plans but encountered by the Subcontractor will be removed and replaced in their original state or protected by the Subcontractor at no additional cost to the Purchaser.

D. Removal of Obstructions

1. The Subcontractor will demolish and remove all structures and structure foundations, abandoned vehicles, appliances, and rubbish within the right-of-way/easement limits necessary for the performance of the work.

E. Protection of Obstructions Outside Easement Limits

1. The Subcontractor will protect and avoid damage to all trees, shrubs, plants, fences, structures, and all other objects outside the right-of-way/easement limits shown on the Plans and/or Plats due to construction operations. All damage will be repaired or restored at the Subcontractor's expense. Particular attention will be paid to avoid damage to trees, shrubs, bushes, and private property located next to rights-of-way/easements. No trees, plants, or other objects may be removed outside such limits without written permission of the property owner.

F. Special Protection of Obstructions Inside Easement Limits

1. Wherever the underground installation of sanitary sewer facilities will go through surface improvements previously made by the City, other governmental bodies, or property owners, the Subcontractor will be responsible for their protection and preservation. This responsibility includes the removal and storage of such improvements to allow replacement and restoration as close as possible to the undisturbed condition.

G. Disposal of Debris

1. All trees, brush, logs, snags, leaves, sawdust, bark, and refuse will be collected and disposed of according to the City Code of Ordinances at the expense of the Subcontractor. There will be no separate pay item for disposal of debris. Debris will be removed from the site when practical and will not be left until the completion of the contract. Burning of debris is not allowed. When material is to be disposed of outside the easement, the Subcontractor will first obtain written permission from the property owner on whose property the disposal is to be made and will file a copy with the Purchaser. Unless otherwise provided in the Contract Documents, the Subcontractor will arrange for disposing of such material outside the right-of-way/easement. No debris will be deposited in wetlands.

H. Replacement of Fences

1. Any fences disturbed inside the right-of-way/easement limits will be replaced or restored to their original or better condition. Any fences removed will be replaced in their original location. Fences in such poor condition that they cannot be taken down and rebuilt with the same material will be replaced with new fence material similar in original quality, size, construction, and appearance to the removed fence. Exceptions to this requirement will be allowed if written releases are obtained from the property owners by the Subcontractor and submitted to the Purchaser.

I. Restoration of Turfed Areas

1. All areas will be restored as nearly as practicable to their original condition. Finished lawn areas where soil has been deposited will be cleared to the level of the existing sod and then raked and watered. Areas where sod has been damaged, destroyed, or ruts have been filled will be resodded After final restoration of the settled trench surfaces, trench areas and areas regraded as part of the construction will be resodded, unless otherwise shown on the Plans or directed by the Purchaser. New sod shall consist of live, dense, well rooted growth of Bermuda grass, free from Johnson grass, nutgrass, and other obnoxious grasses or weeds, well suited for the intended purpose and for the soil in which it is to be planted. All sod shall be cleanly cut in strips having a reasonably uniform thickness. Subcontractor shall water sodded areas as frequently as required for a period of at least two weeks and shall apply fertilizer as necessary. Sod must be living at the time of final acceptance of the project.

3.02 LOCATE MANHOLE

A. The Subcontractor shall be provided all available field records and plan information regarding the location of manhole that is not on grade and showing. Using field measurements, metal detectors or other devices, the Subcontractor shall first locate the manhole cover to be raised to grade. The surface cover (asphalt, soil) shall then be removed and the manhole frame and rim exposed prior to adjustment. The differential height between the existing manhole rim and the street or easement surface shall be measured and this differential is the basis for the selection of the adjustment method and the payment.

3.03 STANDARD ADJUSTMENT METHOD (Adjustments >5” and < 18”)

A. Any manhole covers not adjusted and set at final grade by others shall be adjusted by the Subcontractor. If the cover requires lowering, the manhole rim shall be removed, sufficient upper courses of brick removed, and the rim reset at proper grade by use of cement mortar over the top course of
brick remaining.

B. If the cover requires raising, and reaching the required final rim elevation at grade will exceed the allowable maximum of 5-inches using adapter rings, all existing riser rings in the frame shall be removed and defective courses of brick shall be removed and the manhole rebuilt to the final street or easement grade and the rim reset as described above. The maximum finished collar height as measured from the top of the manhole rim to the beginning of the conical section shall be 18 inches. No manhole cover will be raised more than 18 inches without prior approval of the Program Manager.

3.04 MANHOLE ADJUSTMENT WITH ADAPTER RINGS (Adjustments <5")

For manhole covers to be raised less than or equal to 5 inches and where the total collar height would not exceed 18 inches, manhole adapter rings may be used if approved by the Purchaser. Adapter rings may be add to raise the cover a maximum of 5 inches. Adapter rings shall be tack welded to the existing rim at a minimum of 4 locations.

3.05 MANHOLE ADJUSTMENTS (>18")

No manhole cover will be raised more than 18 inches. The Subcontractor shall report any locations where the manhole must be adjusted by more than 18" to bring it to grade. If the Program Manager decides that the manhole should not be adjusted, the Subcontractor will be compensated for locating, uncovering and then backfilling and paving the excavation under "MOBILZATION FOR MANHOLE ADJUSTMENTS GREATER THAN 18 INCHES."

3.06 TRAFFIC CONTROL

All traffic control shall be installed and maintained in accordance with the Manual on Uniform Traffic Control Devices (MUTCD). At a minimum, the Subcontractor must have two trucks with flashing yellow lights on the work site. Traffic cones must also be placed downstream of the construction site to divert cars into the adjacent lane(s) per MUTCD requirements. On roads with a heavy traffic volume, a flagman may also be needed to assist with traffic control. For bidding purposes, the Subcontractor should assume that a flagman will be needed on 30 percent of the setups.

3.07 FALL PROTECTION

Subcontractor shall install and maintain all fall protection measures in accordance with the SARP10 Loss Control Manual. The Subcontractor shall construct a controlled access zone around the manhole being adjusted. At a minimum, the fall protection zone shall include traffic cones encircled with pennant tape. The controlled access zone must have one point of access with an entrance log.

3.08 REMOVAL & REPLACEMENT OF PAVEMENTS & INCIDENTALS

The Subcontractor shall remove and replace pavement and incidentals in accordance with requirements of Standard Construction Specifications Section 02950, Removal and Replacement of Pavement and Incidentals.

3.09 RESTORATION OF ROAD SURFACES

Flexible pavement (asphaltic concrete) and rigid pavement (Portland cement) shall be restored in kind using materials in accordance with Section 02950 Removal and Replacement of Pavements and Incidentals.

PART 4 – MEASUREMENT

4.01 STANDARD MANHOLE ADJUSTMENTS (Adjustments >5" and < 18")

Standard manhole adjustments will be measured per each.

4.02 MANHOLE ADJUSTMENT WITH ADAPTER RINGS (Adjustments <5")

Manhole adjustment with adapter rings will be measured per each.

4.03 MOBILIZATION FOR MANHOLE ADJUSTMENTS (Adjustments >18")

No manhole cover will be raised more than 18 inches. Mobilization costs for locating, uncovering and then backfilling and paving the excavation for manholes greater than 18 inches shall be measured per each.

4.04 TRAFFIC CONTROL

A. Traffic control will be paid for per each construction area.

4.05 SITE PREPARATION AND RESTORATION

A. The area to be considered for measurement will be the limit of the construction area unless otherwise directed by the Purchaser.

B. When the Proposal Sheet(s) do(es) not contain an item for Site Preparation and Restoration, this work will be required within the construction limits and will not be paid for directly but will be considered as a subsidiary obligation of the Subcontractor under other contract items.

PART 5 – PAYMENT

5.01 STANDARD MANHOLE ADJUSTMENTS (Adjustments >5" and <18")

The accepted quantities of manholes adjusted will be paid for at the contract unit price per each, for raising or lowering the existing or new manhole frame and cover to final grade, which price will be full compensation for furnishing all labor and materials necessary for the complete adjustment of the frames and covers to the satisfaction of the Purchaser.

5.02 MANHOLE ADJUSTMENT WITH ADAPTER RINGS (Adjustments <5")

The accepted quantities of manholes adjusted by the adapter ring method will be paid for at the contract unit price per each, for raising the manhole cover to final grade, which price will be full compensation for furnishing all labor and materials necessary for the complete adjustment of the cover to the satisfaction of the Purchaser.

5.03 TRAFFIC CONTROL

Traffic control will be paid for per each construction area including all appurtenances required to comply with MUTCD standards.

5.04 SITE PREPARATION AND RESTORATION

A. Payment will be made for Site Preparation and Restoration at the contract lump sum price, which will be full compensation for removal of trees, shrubs, plants, brush, rubbish, fences, manmade obstructions including but not limited to structures, abandoned cars and appliances, building foundations, and all other obstructions as may be directed by

the Purchaser; the disposal of debris, removing of obstructions, and the restoration of fences, turfed areas, and all other items will be as specified in the Plans and Contract Documents or as directed by the Purchaser.

5.06 PAYMENT WILL BE MADE UNDER:

Item No.	Pay Item	Pay Unit
02532-5.01	Standard Manhole Adjustment (Adjustments >5” and <18”)	Each
02532-5.02	Manhole Adjustment with Adapter Rings (Adjustments <5”)	Each
02532-5.03	Traffic Control per Construction Area	Each
02532-5.04	Site Preparation and Restoration	Lump Sum

END OF SECTION 02532

CITY OF MEMPHIS – STANDARD CONSTRUCTION SPECIFICATION
Modified by SARP10 Program
SECTION 02540 SANITARY SEWER POINT REPAIRS

The Subcontractor shall complete the Work in accordance with Section 02540 herein and supplemented by the City of Memphis Standard Construction Specifications, which are available for viewing at the SARP10 Program Office.

PART 1 - SCOPE

This section covers the performance of point repairs on gravity sewer lines.

1.01 REFERENCES

A. City of Memphis Standard Construction Specifications.

B. American Standard for Testing and Materials (ASTM).

C. American National Standards Institute (ANSI).

1.02 DEFINITIONS

A point repair as used in these Specifications shall mean repair of pipe segments of existing sanitary sewer mains or service lines and connections which require excavation to accurately locate a defect and make the necessary repair.

PART 2 - MATERIALS AND EQUIPMENT

2.01 PIPE MATERIAL

All repairs to existing gravity sewer lines shall be made using ductile iron pipe. Ductile iron pipe for gravity sewer and service connections will conform to ASTM A 746. The pipe thickness design will conform to ANSI A 21.50. If no thickness class is specified on the Plans or Subcontract Documents, Class 50 or approved equivalent will be used. All ductile iron pipe will be lined with Protecto 401 Ceramic Epoxy, or approved equal. Linings will be applied according to manufacturer's recommendations. Fittings will conform to the requirements of ANSI A 21.10. Unless otherwise specified, joints will be push on gasket type conforming to the requirements of ANSI A 21.11. Mechanical joints will conform to the requirements of ANSI A 21.11. Flanged joints will conform to the requirements of ANSI A 21.15. Steel retainer rings will conform to ASTM A 148 for Grade 90 60.

2.02 ELASTOMERIC COUPLINGS

Elastomeric couplings for connecting replacement pipe to existing pipe shall be Fernco Series 5000 RC Shielded Couplings with nut and bolt clamp, Mission "Flex-Seal" adjustable shielded repair coupling or approved equal.

2.03 BACKFILL UNDER PAVEMENT

Backfill beneath all paved areas shall be either crushed limestone or recycled crushed concrete.

Crushed limestone will be size No. 67 Coarse Aggregate meeting the requirements of the Tennessee DOT Standard Specifications for Road and Bridge Construction and the following gradation:

	Total Percent by Dry Weight, Passing Each Sieve (U.S. Standard)				
Size No.	1"	3/4"	3/8"	No. 4	No. 8
67	100	90-100	20-55	0-10	0-5

PART 3 - CONSTRUCTION REQUIREMENTS

3.01 SITE PREPARATION AND RESTORATION

A. Rights-of-Way and Easements

The Subcontractor will confine his construction activities to the existing rights-of-way or sanitary sewer easements. The Subcontractor will be responsible for obtaining written agreements for use of private property outside City acquired rights of way/easements for such purposes as storage of material and equipment and access to the construction site. The Subcontractor will immediately provide a copy of all such written agreements to the City upon obtaining the same.

B. Clearing of Rights-of-Way and Easements

The Subcontractor will confine his clearing of rights of way and easements to the least area necessary for construction of facilities shown on the Plans. The Subcontractor will protect as many trees and shrubs within the area as possible. Where necessary for construction, the Subcontractor will clear all live and dead vegetation and growth, pole stubs, logs, and other objectionable material. Cleared material will be removed to within 3 inches of existing ground. This work will be done well before excavation operations but only after erosion controls have been placed.

C. Location of Existing Obstructions

Locations of obstructions shown on the Plans are approximate and are not intended as an accurate location of such obstructions. Obstructions not shown on the Plans but encountered by the Subcontractor will be removed and replaced in their original state or protected by the Subcontractor at no additional cost to the Purchaser.

D. Removal of Obstructions

The Subcontractor will demolish and remove all structures and structure foundations, abandoned vehicles, appliances, and rubbish within the right of way/easement limits necessary for the performance of the work.

E. Protection of Obstructions Outside Easement Limits

The Subcontractor will protect and avoid damage to all trees, shrubs, plants, fences, structures, and all other objects outside the right of way/easement limits shown on the Plans and/or Plats due to construction operations. All damage will be repaired or restored at the Subcontractor's expense. Particular attention will

be paid to avoid damage to trees, shrubs, bushes, and private property located next to rights of way/easements. No trees, plants, or other objects may be removed out-side such limits without written permission of the property owner.

F. Special Protection of Obstructions Inside Easement Limits

Wherever the underground installation of sanitary sewer facilities will go through surface improvements previously made by the City, other governmental bodies, or property owners, the Subcontractor will be responsible for their protection and preservation. This responsibility includes the removal and storage of such improvements to allow replacement and restoration as close as possible to the undisturbed condition.

G. Disposal of Debris

All trees, brush, logs, snags, leaves, sawdust, bark, and refuse will be collected and disposed of according to the City Code of Ordinances at the expense of the Subcontractor. There will be no separate pay item for disposal of debris. Debris will be removed from the site when practical and will not be left until the completion of the contract. When material is to be disposed of outside the easement, the Subcontractor will first obtain written permission from the property owner on whose property the disposal is to be made and will file a copy with the Purchaser. Unless otherwise provided in the Subcontract Documents, the Subcontractor will arrange for disposing of such material outside the right of way/easement. No debris will be deposited in wetlands.

H. Replacement of Fences

Any fences disturbed inside the right of way/easement limits will be replaced or restored to their original or better condition. Any fences removed will be replaced in their original location. Fences in such poor condition that they cannot be taken down and rebuilt with the same material will be replaced with new fence material similar in original quality, size, and appearance to the removed fence. Exceptions to this requirement will be allowed if written releases are obtained from the property owners by the Subcontractor and submitted to the Purchaser.

I. Disposition of Excavated Material

1. Excavated material suitable for backfill will be stored no closer than 2 feet from the edge of the excavation. Excavated material will not obstruct crosswalks, side-walks, driveways, street intersections, nor interfere unreasonably with travel on streets. Gutters or other surface drainage facilities will not be obstructed. The Subcontractor must provide access to fire hydrants, mail boxes, sewer and conduit manholes and similar utility or municipal service facility as required. Excavated material intended for backfill will be stored in a way that minimizes loss of excavated material due to erosion. The Subcontractor shall comply with all applicable OSHA regulations and City of Memphis Storm Water Ordinances.

2. Unless otherwise directed, all excavated material that will not be used for backfilling or restoration will be removed from the site and disposed of by the Subcontractor. If the Subcontractor proposes to store or place such excess excavated material upon any private property, written consent of the property

owner or owners must be obtained by the Subcontractor in advance. A certified copy will be given to the Purchaser. No surplus or excess material will be deposited in any stream channel nor anywhere that would change preconstruction surface drainage.

J. Control of Water

1. The Subcontractor will keep all excavations free of water. If the trench subgrade consists of good soil in good condition at the time of excavation, it will be the Subcontractor's responsibility to maintain it in suitable condition. Dams, flumes, channels, sumps, or other work and equipment necessary to keep the excavation clear of water will be provided by the Subcontractor. Dewatering of trenches, will be incidental to trench excavation. The Subcontractor will avoid producing mud in the trench bottom by his operations. If necessary or so ordered by the Purchaser, the Subcontractor will re-move any soil that becomes unacceptable and replace it with limestone or other approved aggregate at his own expense to maintain a firm, dry base.

2. Pipe embedment, laying, jointing, and the placing of concrete or masonry will be done in a water free trench or excavation. Trenches will be kept clear of water until pipe joints, concrete and masonry have set and are resistant to water damage. The water will be disposed of in a manner acceptable to the Purchaser.

3. All gutters, pipes, drains, conduits, culverts, catch basins, storm water inlets, ditches, creeks, and other storm water facilities will be kept in operation, or their flows will be satisfactorily diverted and provided for during construction. Any facilities disturbed during construction will be restored to the satisfaction of the Purchaser.

K. Excavation Around Obstructions

1. The Subcontractor will perform all excavation by hand where excavation by machinery would endanger trees, structures, or utilities that otherwise might be saved by hand excavation.

2. The Subcontractor will cautiously excavate test holes to find the limits of under-ground obstructions anticipated within the excavation. When a water pipe, gas pipe, other sanitary sewer, storm drain, or similar utility comes within the limits of the trench, such facilities will be properly supported.

L. Special Protection

1. Treacherous Ground: When running sand, quicksand, or other treacherous ground is encountered, the work will be carried on with the utmost urgency and will continue day and night should the Purchaser so direct.

2. Sheeting and Shoring: The Subcontractor will furnish, place, and maintain sheeting and shoring as required to support the sides of any excavation to prevent earth movement that could endanger the workers or public and to prevent damage to the excavation, adjacent utilities or property. The Subcontractor will place this sheeting and shoring without the Purchaser's instructions.

3. Sheeting will extend below structure invert a sufficient depth to assure adequate support. In the installation of sheeting, the use of vibratory type pile drivers (as opposed to impact type) will be limited to sheeting driven no greater than 5 feet below the invert. The sheeted trench width, as measured between those faces of the sheeting in contact with the earth trench wall, will not exceed the maximum width of a trench per Specification Section 02530 Paragraph 3.02.B. Walers and struts will be designed and installed to present no obstructions to proper placement of the pipe, pipe embedment, cradle or encasement, and they will not interfere with the satisfactory installation of the pipe.

4. Sheeting, bracing, and shoring will be withdrawn and removed as the back-filling is being done, except where the Purchaser permits the material to be left in place. The Subcontractor will cut off sheeting left in place at least 2 feet below the surface and will remove the cut off material from the excavation.

5. All sheeting, bracing, and shoring which are not left in place under this provision will be removed in a way that will not endanger the completed work or other structures, utilities, storm drains, sewers, or property. The Subcontractor will be careful to prevent the opening of voids during the extraction process.

6. If sheeting and shoring are not specifically required on the Plans or in the Specifications, steel drag shields or trench boxes may be used subject to the authorization of the Purchaser. Voids left by the advancement of the shield will be carefully backfilled and compacted following trench backfill requirements.

M. Existing Utilities

1. Location: It will be the Subcontractor's responsibility to arrange for the location of existing utilities prior to excavation. The Subcontractor will also be responsible for coordinating the relocation of any existing utilities with the appropriate utility owner.

2. Protection: The Subcontractor will protect any storm drain, sewer, or utility within the limits of the construction. The Subcontractor will proceed with caution and will use every means to establish the exact location of underground structures and facilities before excavating in the vicinity. The City or Purchaser will not be responsible for the cost of protection or repair or replacement of any structure, pipe line, conduit, service connection, or similar facility broken or damaged by the Subcontractor's operations. All water and gas pipes and other conduits near or crossing the excavation will be properly supported and protected by the Subcontractor.

3. If the construction requires the removal and replacement of any overhead wires or poles, underground pipes, conduits, structures or other facilities, the Subcontractor will arrange for such work with the Owner or Owners of the facilities. No additional payment will be made by the City or Purchaser for this work.

4. Service Connections: Sewer and utility services between mains and buildings will be maintained and adjusted as necessary by the Subcontractor to provide as

nearly a continuous operation as can be expected. This will be accomplished in any way that the Subcontractor chooses, provided the individual service is not interrupted for more than two consecutive hours. The occupants will be notified by the Subcontractor at least six hours before such service interruptions. When a break occurs, the Subcontractor will notify the affected occupant(s) of the probable length of time that the service will be interrupted.

5. If existing underground facilities or utilities require removal and replacement for the performance of this work, all replacements will be made with new material conforming to the requirements of these Specifications. If not specified, the material will be as approved by the Purchaser.

6. The removal and replacement of water services to adapt to new construction will be the Subcontractor's responsibility within the limits where the new service line grade blends smoothly with the existing service line grade.

7. The removal and replacement of sewer house connections to adapt to new construction will be the Subcontractor's responsibility from the sewer main to a point where the new grade and existing grade can be matched.

8. The Subcontractor will be responsible for any damage to the sewer house connection because of his operations. The Purchaser does not guarantee the number, size, condition, nor length of adjustment necessary to bring a service to a new grade.

N. Maintenance of Flow

Where existing sewer lines are being modified, the Subcontractor will arrange his work so that sewage flow will be maintained during the construction period with no discharge of sewage into the open trench, and no back up of sewage in the existing line. The Subcontractor will provide necessary bypass pumping capacity to carry flow downstream of the section to be modified.

O. Removal and Replacement of Vegetated Areas

The Subcontractor shall remove the vegetated area around a manhole as needed to adjust the manhole frame and cover. All disturbed areas shall be restored as nearly as practical to their original condition. The disturbed area shall be cleared and raked to the level of the existing turf and then watered. New sod shall be installed over the entire disturbed area. New sod shall consist of live, dense, well rooted growth of Bermuda grass, free from Johnson grass, nutgrass, and other obnoxious grasses or weeds, well suited for the intended purpose and for the soil in which it is to be planted. All sod shall be cleanly cut in strips having a reasonably uniform thickness of not less than 2 inches and cut in 10 to 12 inch squares.

P. Cleanup

After the installation work has been completed, the Subcontractor shall cleanup the entire project area. All excess material and debris not incorporated into the permanent installation shall be disposed of by the Subcontractor. The work area shall be left in a condition equal to or better than it was prior to the performance of the Work. Disturbed grassed areas shall be seeded or sod placed as directed by the Purchaser at no additional cost to the Owner. Site restoration shall be performed in accordance with the City of Memphis Standard Construction Specifications.

3.02 BACKFILLING

A. General

1. After sanitary sewer facilities have been bedded and installed according to these Specifications and upon permission of the Purchaser, the backfill may be placed. Backfilling operations will continue following as closely behind pipe installation as practical. All backfill will be placed in uniform horizontal layers. Pushing backfill material down a ramp into excavated areas will not be permitted. No trash will be allowed to accumulate in the space to be backfilled. Particular care will be taken to avoid allowing wood to be included in the backfill, other than sheeting and shoring that has been approved to be left in place.

2. The Subcontractor will be responsible for the condition of the trenches and filled areas during the contract and warranty period. The Subcontractor will maintain frequent inspection of the same. Anytime during the 12-month warranty period the trenches or filled areas settle and sunken places appear, the Subcontractor will be required to refill these sunken places when they are discovered with suitable material and will replace all damaged curb, gutter, and sidewalk. All soft or dangerous trenches will be marked, barricaded and caution lighted for the protection of the public.

3. Property with an existing dwelling located on it or lots within a developed subdivision or planned development are considered improved property.

B. Street Right of Way and Improved Property

1. Backfill Material: Backfill for pipe trench excavations through pavements in street or highway right of way or where the Purchaser orders, will be made with pit run gravel or other acceptable material as approved by the Purchaser. The backfill will be from the top of the pipe embedment material or manhole foundation to the subgrade elevation of the pavement. Pea gravel or similar granular material approximately uniform in size and without bonding properties will not be used.

2. Backfill for pipe trench excavations beyond pavements in street or highway right of way or outside public right of way will be made with select earth from the top level of the pipe embedment material or foundation to the subgrade elevation in paved area, or within 1 inch of the surface in areas to be sodded, or to the surface in all other areas.

3. Select material will be free from debris, organic matter, perishable compressible material and will contain no stones or lumps larger than 6 inches. Rocks and lumps smaller than 6 inches will not exceed an amount that will interfere with the consolidating properties of the fill material. Care will be taken that stones and lumps are kept separated and well distributed, and that all voids are completely filled with fine material. No rocks or lumps will come in direct contact with the pipe. The upper 3 feet of backfill in sodded or planted areas will be free of rocks or lumps larger than 1 inch in diameter.

4. Placement and Compaction: Backfill material will be placed by hand in 6 inch loose layers and tamped to a point 2 feet above the outside top of the pipe. Backfill will be compacted with suitable mechanical tamping equipment with special care being taken not to damage the pipe or joints. Use of compaction equipment directly above semi-rigid and flexible pipe should be avoided until sufficient backfill has been placed to ensure that the equipment will not damage the pipe. A minimum of 36 inches of compacted backfill above the top of semi-rigid and flexible pipe will be in place before wheel loading and a minimum of 48 inches of compacted backfill before use of pneumatic tampers. From these elevations to the subgrade elevation of the pavement, bottom of the sod, or to the original ground surface, suitable backfill will be mechanically placed in 9 inch, maximum, loose layers. All backfill material will be compacted to 95 percent of maximum density at plus or minus 2 percent of optimum moisture content as determined by Laboratory Standard Proctor Test (ASTM D 698).

C. Open Areas and Unimproved Property

Backfill of excavations on unimproved property will be made with select material from the top level of pipe embedment material or foundation to the surface. Non-granular select material to be used for backfill will be free from debris, organic matter and perishable compressible material, and will contain no stones or lumps or rock fragments larger than 6 inches. Rocks or lumps smaller than 6 inches in diameter will not exceed an amount that will interfere with the consolidating properties of the fill material. No rocks or lumps will come in direct contact with the pipe. Stones and lumps will be kept separated and well distributed, and all voids will be completely filled with fine material.

3.03 METHOD OF REPAIR

A. The Subcontractor shall replace a sufficient number of entire pipe joints to ensure that defective pipe is removed and replaced up to 10 feet in length, per repair, at the discretion of the Purchaser, in accordance with the SARP10 Sanitary Sewer Point Repair detail.

B. If the length of the required replacement segment is not adequate to locate sufficient competent pipe for connection with the new section, the Subcontractor, at the Purchaser's instruction, may be directed to replace additional sections of pipe such that an appropriate connection is possible.

C. The Subcontractor shall replace service wyes encountered within the point repair. Any defective service lines encountered within the point repair shall be replaced.

D. Any service line or competent main line pipe broken by the Subcontractor shall be replaced at the Subcontractor's expense.

E. The Subcontractor shall remove any fences, base materials, storm sewer, etc. that may interfere with the repair made at each specified point. The Subcontractor is responsible for the replacement of said fences, base materials, storm sewer etc., in the same or better condition than found.

F. The bottom of the trench shall be reshaped so that the grade of the pipe replaced will match that required for the existing sewer line. The pipe embedment material shall be placed and the repair area shall be backfilled in accordance with Section 02530 Sewer Pipe Installation of the City of Memphis Standard Construction Specifications Modified by the SARP10 Program.

G. If the material in the bottom of the trench is of such consistency that it is not stable, then the Subcontractor shall stabilize the bottom of the trench by placing suitable materials at the direction of the Purchaser in accordance with the 3.02 C. 1. Undercut Excavation of Section 02530 Sewer Pipe Installation of the City of Memphis Standard Construction Specifications Modified by the SARP10 Program.

H. Prior to backfilling, point repairs shall be inspected by the Purchaser.

3.04 VISUAL INSPECTION

All work will be subject to visual inspection for faults or defects and any such deviation or omission will be corrected at once. All tests will be made by the Subcontractor who will provide necessary equipment for testing and lamping the system in the presence of and under the supervision and instructions of the Purchaser. Lamp tests will be observed first hand by the Purchaser. Each section of sewer line will show a full circle of light when lamped between manholes. All defects located will be corrected before conducting leakage tests

After backfilling and resurfacing, sewer segments containing point repairs shall be internally televised (CCTV) by the Subcontractor in their entirety in accordance with Section 00003 – Closed Circuit Television Inspection of Sewer Mains and Connections for final review and approval by the Purchaser.

3.05 TRAFFIC CONTROL

All traffic control shall be installed and maintained in accordance with the Manual on Uniform Traffic Control Devices (MUTCD). At a minimum, the Subcontractor must have two trucks with flashing yellow lights on the work site. Traffic cones must also be placed downstream of the construction site to divert cars into the adjacent lane(s) per MUTCD requirements. On roads with a heavy traffic volume, a flagman may also be needed to assist with traffic control. For bidding purposes, the Subcontractor should assume that a flagman will be needed on 30 percent of the setups.

3.06 FALL PROTECTION

Subcontractor shall install and maintain all fall protection measures in accordance with the SARP10 Loss Control Manual. The Subcontractor shall construct a controlled access zone around the manhole being adjusted. At a minimum, the fall protection zone shall include traffic cones encircled with pennant tape. The controlled access zone must have one point of access with an entrance log.

PART 4 – MEASUREMENT

4.01 SEWER POINT REPAIR

Sewer point repairs will be measured per each. The repair length of ten linear feet will be measured along the centerline of the new pipe. Each additional linear foot of repair, directed by the Purchaser, beyond the minimum 10 feet will be measured for payment. The depth of the repair is measured from the existing grade to the pipe invert.

4.02 TRAFFIC CONTROL

Traffic control will be paid per each sewer point repair.

4.03 SITE PREPARATION AND RESTORATION

The area to be considered for measurement will be the limit of the construction area unless otherwise directed by the Purchaser.

4.04 PAVEMENT BACKFILL

A. Pit run gravel or other acceptable material used for backfill under pavements or other areas directed by the Purchaser will be measured by the cubic yard in the following manner. Cubic yards of Pavement Backfill equals the linear feet of sewer pipe installed directly below pavement as measured along the centerline of the pipe multiplied by the trench payline width in feet multiplied by the depth of pavement backfill material in feet divided by 27. The trench payline width is defined as the outside diameter of the sewer pipe plus 2 feet. The depth of pavement backfill is defined as the distance from 6 inches above the top of the sewer pipe to the subgrade elevation of the pavement.

PART 5 – PAYMENT

5.01 SEWER POINT REPAIR

The accepted quantities of all mainline sewer point repairs will be paid for at the contract unit price per each for the various pipe sizes and depth of repair, which will be full compensation for material and material testing, excavation, special protection, protection of existing utilities, maintenance of sewage flow, pipe embedment, haunching, laying, jointing, cleaning and inspection, conducting acceptance tests, installation of pipe wyes, connection to manholes, adapters and couplings, stoppers, and removal and/or abandonment of existing pipe within the limits of excavation and backfilling outside pavement areas.

5.02 TRAFFIC CONTROL

Traffic control will be paid per each sewer point repair including all appurtenances required to comply with MUTCD standards.

5.03 SITE PREPARATION AND RESTORATION

A. Payment will be made for Site Preparation and Restoration at the contract lump sum price, which will be full compensation for removal of trees, shrubs, plants, brush, rubbish, fences, manmade obstructions including but not limited to structures, abandoned cars and appliances, building foundations, and all other obstructions as may be directed by the Purchaser; the disposal of debris, removing of obstructions, and the restoration of fences, turfed areas, and all other items will be as specified in the Plans and Contract Documents or as directed by the Purchaser.

5.04 PAVEMENT BACKFILL

Accepted quantities of pit run gravel or other acceptable material used for backfill under pavements or other areas designated by the Purchaser will be paid for at the contract unit price per cubic yard furnished and placed, which will be full compensation for furnishing, placing and compacting the selected material.
.

5.05 PAYMENT WILL BE MADE UNDER:

Item No.	**Pay Item**	**Pay Unit**
02540-5.01.07	Sewer Point Repair, 20” through 24” Pipe (<10’ Deep)	Each
02540-5.01.10	Each service connection and associated lateral pipe included in a Sewer Point Repair, all depths, all diameters	Each
02540-5.02	Traffic Control per Point Repair	Each
02540-5.03	Site Preparation and Restoration per Point Repair	Lump Sum
02540-5.04	Pavement Backfill	Ton

02540-5.01.07	Sewer Point Repair, 21” through 24” Pipe (<10’ Deep)	Each
02540-5.01.07a	Each additional linear foot beyond the 10 feet minimum, for Sewer Point Repair, 21” through 24” Pipe (<10’ Deep)	Linear Foot
02540-5.01.08	Sewer Point Repair, 21” through 24” Pipe (10.1’-15’ Deep)	Each
02540-5.01.08a	Each additional linear foot beyond the 10 feet minimum, for Sewer Point Repair, 21” through 24” Pipe (10.1’-15’ Deep)	Linear Foot
02540-5.01.09	Sewer Point Repair, 21” through 24” Pipe (15.1’-20’ Deep)	Each
02540-5.01.09a	Each additional linear foot beyond the 10 feet minimum, for Sewer Point Repair, 21” through 24” Pipe (15.1’-20’ Deep)	Linear Foot
02540-5.01.10	Each service connection and associated lateral pipe included in a Sewer Point Repair, all depths, all diameters	Each
02540-5.02	Traffic Control per Point Repair	Each
02540-5.03	Site Preparation and Restoration per Point Repair	Each
02540-5.04	Pavement Backfill	Ton

END OF SECTION 02540

SECTION 02950 REMOVAL AND REPLACEMENT OF PAVEMENTS AND INCIDENTALS

PART 1 – SCOPE

This Work shall consist of the removal and replacement of pavements, sidewalks, driveway aprons, curbs and gutters, driveways, paved areas, and curbs made necessary by the improvement of sanitary sewer infrastructure, and other items of construction that require temporary cuts. Such replacement shall be to a condition at least equal to the condition existing prior to removal and of in-kind material and shall be compliance with the Drawings, these Specifications, or as directed by the Purchaser. The Work which will be included in the Subcontract and for which the Subcontractor shall be compensated therefore is limited to that area within the rights-of-way and construction easements for the Project. The Subcontractor will not be compensated for the removal and replacement of facilities outside the rights-of-way, easements, and limits of construction of the Project.

PART 2 – MATERIALS AND EQUIPMENT

2.01 MATERIALS

A. Concrete: Portland cement concrete shall be in accordance with Section 03050 Portland Cement Concrete.

B. Asphaltic Concrete Pavement: Asphaltic concrete surface courses shall meet the requirements of Mix No. 1 and bases courses shall meet the requirements of Mix No. 2 as described below.

1. The composition of the mixes shall be as follows:

Total Percent Passing by Weight

Sieve Size	Mix No. 1	Mix No. 2
2”	100	100
1-1/2”	100	100
3/4”	100	100
3/8”	76 - 96	65 - 95
No. 4	51 - 76	45 - 70
No. 8	36 - 60	25 - 50
No. 30	16 - 40	12 - 30
No. 100	3 - 12	2 - 12
No. 200	2 - 8	1 - 6

2. The proportions of the total mixture, in percent by weight, shall be as follows:

Courses	Combined Mineral Aggregate	Asphalt Cement
Mix No. 1, Surface	92.0 – 96.0	4.0 – 8.0
Mix No. 2, Binder	93.0 – 97.5	2.5 – 7.0

3. It is the intent of this Section of the Specifications that the above described mixes shall conform to the following mixtures specified in the Tennessee Department of Transportation Standard Specifications for Road and Bridge construction.

Mix No. 1 – Section 411, Asphaltic Concrete Surface (Hot Mix), Grading E.

Mix No. 2 – Section 307, Bituminous Plant Mix Base (Hot Mix), Aggregate Grading C.

4. For multiple layer construction, succeeding layers shall not be laid until the previous layer has cooled sufficiently to support the construction equipment

5. When Mix No. 1 is to be used as a surface for traffic lanes, the mineral aggregate shall be composed of not less than 50 percent nor more than 55 percent crushed limestone and not more than 50 percent nor less than 45 percent natural sand. When Mix No. 1 is used for surfacing of shoulders or other non-traffic lane construction, the mineral aggregate may be composed entirely of limestone, including screening and manufactured sand, but in no case shall the mineral aggregate for this construction consist of less than 50 percent limestone. The natural sand shall be so graded that not more than 5 percent will be retained on the No. 4 sieve.

C. Expansion Joint Filler: Preformed expansion joint filler shall be of the bituminous type, shall conform to the requirements of AASHTO M 213 and shall not be more than 1 inch or less than 1/2 inch in thickness. The filler shall be cut to the full depth of pavement, curb and gutter, sidewalk, or driveway being replaced.

D. Gravel Pavement or Base: Crushed limestone with such material as manufactured sand or other fine materials naturally contained or added thereto as needed to match existing conditions and conform to the gradations shown below:

Grading Table for Graded Aggregate Base Course
Total Percent, by Dry Weight, Passing Each Sieve (U.S. Standard)

Size No.	2 ½ "	2"	1 ½ "	1"	3/8"	No. 40
1	100	95-100			35-65	10-30
2		100	95-100		40-65	10-30

2.02 EQUIPMENT

A. Equipment and tools necessary for cutting, removal, and hauling of existing items; handling and placement of new material; and all equipment necessary to perform all parts of the Work shall be at the job site sufficiently ahead of the start of construction operations to be examined and approved by the Purchaser.

B. When saws are used to cut pavement, the Subcontractor shall provide sawing equipment adequate in power to complete the sawing to a minimum of 1-1/2 inches below the pavement surface in one pass. An ample supply of saw blades shall be maintained at the site of the Work at all times during sawing operations.

C. Other types of pavement cutting equipment shall be capable of cutting the pavement to a neat straight line of 1-1/2 inch minimum depth below the pavement surface in one pass.

D. The Subcontractor shall provide equipment capable of removal of pavements, sidewalks, driveway aprons, curbs and gutters, driveways, paved areas, and curbs without disturbance of adjacent items to remain in place.

PART 3 – CONSTRUCTION REQUIREMENTS

3.01 REMOVAL OF ASPHALT PAVEMENT

Asphalt pavement shall be removed to a clean straight line as shown on the drawing details. Pavement shall be cut by saw or other equipment approved by the Purchaser in advance. Edges of existing asphalt pavement adjacent to trenches, where damaged, shall be recut in a clean straight line within the limits of damaged pavement only. Such recuts shall be parallel to the original cuts and perpendicular to the pavement surface.

3.02 REMOVAL OF CONCRETE PAVEMENT

Concrete pavement shall be removed to a neat straight line as shown on the drawing details. Care shall be used to avoid damage to pavements and to the pavement base remaining in place.

3.03 REMOVAL OF CONCRETE SIDEWALK, CURB AND GUTTER, AND DRIVEWAY

Concrete sidewalks, curbs and gutters, and driveways shall be removed to the nearest contraction or expansion joint. Care shall be used to avoid damage to sidewalks, curbs and gutters, and driveways remaining in place.

3.04 REMOVAL OF GRAVEL PAVEMENT

Gravel surfaces encountered in construction shall be removed as needed to allow for the adjustment of the manhole frame and cover.

3.05 REPLACEMENT OF PAVEMENT

A. Asphalt Pavements

1. Replace asphalt paving courses to match existing thickness. The minimum surface course thickness shall be 2 inches. Asphalt pavement and base replacement shall be constructed for the entire cross-section of pavement removal area including all areas where pavement was re-cut subsequent to the initial pavement removal.

B. Concrete Pavements

1. Concrete pavement shall be replaced with Class A concrete pavement equal in thickness to the pavement removed but not less than 4 inches thick. Concrete pavement and base replacement shall be constructed for the entire cross-section of pavement removal area including all areas where pavement was re-cut subsequent to the initial pavement removal.

2. Reasonable efforts shall be made to avoid contrast in the color and texture of existing and restored surfaces.

C. Placing, Curing, and Protection of Concrete

1. After the backfill in the trench has been brought to the appropriate subgrade elevation shown on the Plans, compacted to the specified density, and permission has been given by the Purchaser, a concrete slab of the appropriate thickness shall be placed within the entire disturbed area.

2. Any loose or disturbed pavement or base shall be removed prior to placement of the concrete. Concrete shall be placed only on a moist subgrade and shall not be placed unless the ambient temperature is 35° F and rising. In no case shall concrete be placed on a frozen or frosty subgrade. After the concrete is placed, it shall be struck off in an approved manner to the appropriate grade as shown on the Plans and shall be finished with floats and straight edges until the required surface texture has been obtained.

3. No vehicles or loads shall be permitted on any concrete until the Purchaser has determined that the concrete has obtained sufficient strength for such loads. The Subcontractor shall construct and place such barricades and protection devices as are necessary to protect the concrete.

3.06 REPLACEMENT OF SIDEWALKS, DRIVEWAY APRONS, CURBS AND GUTTERS, DRIVEWAYS AND OTHER PAVED AREAS, AND CURBS

A. Concrete sidewalks and driveway aprons shall be replaced in accordance with the City of Memphis Standard Construction Specifications.

B. Unless otherwise directed, curb and gutter shall be replaced with new concrete curb and gutter of the same cross-section and at the same top of curb elevation and flow line as that removed. Where curb and gutter of a different type than existing is to be used for replacement, the replacement flow line shall match existing and a transitions section provided between the existing and replacement cross-sections. Curb heights shall be transitioned at a rate of 1 inch in 5 feet. Granite curb shall be replaced with new concrete curb whose height matches existing adjacent curb top elevations. Any expansion joint material removed shall be replaced at the original locations. Existing concrete edges shall be cleaned prior to placement of concrete. The finished curb and gutter cross-section, elevations, texture, and color shall conform to the adjacent concrete surfaces.

C. Replacement of paved areas other than street pavement; concrete, asphalt, or gravel driveways; and asphalt or concrete curb within the right-of-way or construction easement limits shall be in kind for those cross-sections removed, unless directed otherwise by the Purchaser.

3.07 DAMAGE DUE TO SETTLEMENT

A. The Subcontractor shall be responsible for any damage caused by settlement of backfill placed beneath pavements, sidewalks, driveway aprons, curbs, curbs and gutters, driveways, paved areas other than street pavement, and asphalt or concrete curb within the right-of-way or construction easement limits. This includes any damage which may occur at any time prior to, and during a period of one year from the date of Final Completion of the Work covered by the Subcontract.

B. During such period, the Subcontractor shall at his own cost and expense refill all excavations where settlement damage has occurred and replace damaged pavements, sidewalks, driveway aprons, curbs, curbs and gutters, paved areas, driveways, and all other damaged items to the satisfaction of the Purchaser. Should the Subcontractor fail to repair settlement damage which may occur as described above within 5 days after being given notice thereof, the Purchaser shall have the right to repair such settlement and charge the cost of such repairs to the Subcontractor.

3.08 DAMAGE OUTSIDE CONSTRUCTION EASEMENT LIMITS

The Subcontractor will be held responsible for all damage to roads, highways, shoulders, curbs and gutters, ditches, embankments, bridges, culverts, and other property, caused by him or any of this Sub-subcontractors in hauling or otherwise transporting materials to and from the several sites of Work, regardless of the location of such damage. The Subcontractor shall make arrangements relative to the payment for, or repair or replacement of, such damage or damaged surfaces or structures which are satisfactory and acceptable to the Purchaser, at the Subcontractor's cost and expense.

PART 4 – MEASUREMENT

4.01 PAVEMENT REMOVAL AND REPLACEMENT
Pavement removal and replacement shall be measured for payment by the square yard, complete in place.

4.02 CONCRETE SIDEWALK REMOVAL AND REPLACEMENT
Sidewalk removal and replacement shall be measured for payment by the square foot, complete in place.

4.03 CONCRETE CURB AND GUTTER REMOVAL AND REPLACEMENT
Curb and gutter removal and replacement shall be measured for payment by the linear foot, complete in place.

4.04 GRAVEL DRIVEWAY AND GRAVEL AREA REMOVAL AND REPLACEMENT
Gravel driveways and gravel area removal and replacement shall be measured for payment by the ton of crushed limestone, complete in place.

PART 5 – PAYMENT

5.01 PAVEMENT REMOVAL AND REPLACEMENT
The accepted quantities of pavement removal and replacement shall be paid for at the Subcontract unit price per square yard for the type specified, which price will be full compensation for cutting and recutting pavement; removal and disposal of pavement and base; preparing the subgrade; placing, finishing, curing, and protection of concrete; and placing and compacting asphaltic concrete wearing surfaces, complete in place.

5.02 CONCRETE SIDEWALK REMOVAL AND REPLACEMENT
The accepted quantities of sidewalk removal and replacement shall be paid for at the contract unit price per square foot, which price will be full compensation for removal and disposal of sidewalk; preparing the subgrade; and placing, finishing, curing and protection of concrete, complete in place.

5.03 CONCRETE CURB AND GUTTER REMOVAL AND REPLACEMENT.
The accepted quantities of curb and gutter removal and replacement shall be paid for at the Subcontract unit price per linear foot for the type specified, which price will be full compensation for removal and disposal of curb and gutter; preparing the subgrade; and placing, finishing, curing and protection of concrete, complete in place.

5.04 GRAVEL DRIVEWAY AND GRAVEL AREA REMOVAL AND REPLACEMENT
The accepted quantities of gravel driveway and gravel area removal and replacement shall be paid for at the Subcontract unit price per ton of crushed limestone, which price will be full compensation for preparing the subgrade and replacing the gravel, complete in place.

5.05 PAYMENT WILL BE MADE UNDER:

Item No.	Pay Item	Pay Unit
02950-01.01	Asphaltic Concrete Pavement Removal and Replacement	Square Yard
02950-01.02	Concrete Pavement Removal and Replacement	Square Yard
02950-02	Concrete Sidewalk Removal and Replacement	Square Foot
02950-04	Concrete Curb And Gutter Removal and Replacement	Linear Foot

02950-06	Gravel Driveway And Gravel Area Removal and Replacement with Crushed Stone	Ton

END OF SECTION 02950

CITY OF MEMPHIS – STANDARD CONSTRUCTION SPECIFICATIONS
Modified by SARP10 Program
SECTION 03050 PORTLAND CEMENT CONCRETE

PART 1 - SCOPE

This specification covers the classification, materials, proportioning of materials, equipment, mixing requirements, and testing for portland cement concrete to be used for construction of streets, bridges, and miscellaneous structures and facilities as defined in Division 2 – Site Construction of these Specifications. The classification requirements, forming, curing, measurement, and payment for specific uses of concrete are specified and defined in the appropriate sections of Division 2.

PART 2 – CONCRETE CLASSIFICATION

2.01 CONCRETE CLASSIFICATION

Portland cement concrete used for construction of the various items covered in Division 2 of these Specifications shall be classified by usage as follows:

A. Class A.

Class A concrete shall be used as specified for such items as concrete curb, curb and gutter, sidewalks, drainage and sewer structures other than box culverts, ditch paving, bridges (other than superstructure) and similar uses.

B. Class A S.

Class A S concrete shall be used for bridge superstructures and channel lining of ditches.

C. Class B.

Class B concrete shall be used for roadway base and pavement.

D. Class C.

Class C concrete shall be used as specified for such items as concrete cradles, encasements, embankment slope paving at bridge abutments, and other low strength applications.

E. Class P.

Class P concrete shall be used for cast-in-place box culverts and precast and precast-prestressed concrete structures or structural members. High-early-strength concrete shall be as specified in Specification Section 03050 Paragraph 6.05.

PART 3 – MATERIALS.

Materials used in the production of portland cement concrete of the various classifications specified herein shall meet the following requirements.

3.01 PORTLAND CEMENT.

Portland cement shall be Type I cement conforming to the requirements of AASHTO M 85, except that for high-early-strength concrete, Type III cement may be used.

3.02 FINE AGGREGATE.

A. Fine aggregate shall consist of natural sand, clean and free from any surface film or coating and graded from fine to coarse. Fine aggregate shall conform to the requirements of ASTM C 33 and the specifications included herein. The amount of deleterious substance shall not exceed the following percentage by weight:

Removed by decantation…… 3 percent

Coal or lignite…… 1 percent

Clay lumps…… 1 percent

Other local deleterious substances (such as shale, alkali,

Mica, coated grains, soft and flaky particles)……. 1 percent

Total coal, clay lumps, shale, soft fragments and other
local deleterious substances …….. 5 percent

B. All fine aggregate shall be free from amounts of organic impurities that would be detrimental to concrete strength and durability. Aggregate shall be subjected to the colorimetric test made in the field as follows:

Fill a 12 oz. graduated bottle to the 4 ½ oz. mark with the sand to be tested. Add a 3% solution of sodium hydroxide until the volume, after shaking, amounts to 7 ounces. Shake thoroughly and let stand for 24 hours. The sample shall then show a practically colorless solution, or at least, a solution not darker than straw color.

C. Fine aggregate shall be well graded from coarse to fine and, when tested by means of laboratory sieves, shall conform to the following requirements:

Passing	Percent
3/8 in. Sieve……	100
No. 4 Sieve……	95 to 100
No. 16 Sieve……..	50 to 90
No. 50 Sieve……..	10 to 30
No. 100 Sieve……	0 to 10
No. 200 Sieve……	0 to 3

Note: Not more than 45% should be retained between any two consecutive sieves.

D. Fine aggregate shall be of such quality that mortar composed one (1) part portland cement and three (3) parts fine aggregate, by weight when made into briquets or cylinders, shall show a tensile or compressive strength at seven (7) and twenty-eight (28) days at least equal to the strength of briquets or cylinders composed of one (1) part of the same cement and three (3) parts standard Ottawa sand by weight. The percentage of water used in making the test specimens of cement and fine aggregate shall be such as to produce a mortar of the same consistency as that of the Ottawa sand test specimens of standard consistency.

3.03 COARSE AGGREGATE.

A. Coarse aggregate for any class of portland cement concrete shall consist of crushed stone or crushed or uncrushed gravel unless otherwise specified.

B. Coarse aggregate for Class A, Class B, or Class C concrete shall be furnished in two sizes: Size No. 4 and Size No. 67 as shown hereinafter in Table 03050.1, Coarse Aggregate Gradation Table. The two sizes shall be manufactured, within the specified limits, to produce Size No. 467 when combined in the proper proportions at the batching plant. If the supplier provides a proper stockpile to prevent segregation, then a combined Size No. 467 can be used in lieu of blending Size No. 4 and Size No. 67.

C. Coarse aggregate for Class AS concrete shall be Size No. 57. Only limestone coarse aggregate will be used for Class AS concrete; gravel coarse aggregate will not be permitted.

D. Coarse aggregate for Class P concrete shall be size No. 57 or Size No. 67 as may be specified or directed. Only limestone coarse aggregate shall be used for Class P concrete; gravel coarse aggregate will not be permitted.

E. Coarse aggregate for concrete curbing placed by machine extrusion methods shall be Size No. 57 or Size No. 67.

F. The coarse aggregates shall otherwise conform to the requirements of AASHTO M 80 and ASTM C 33 with the following exceptions and stipulations:

1. Deleterious Substances.
The amount of deleterious substances shall not exceed the following limits:

		Maximum Percent by Weight
a.	Soft or nondurable fragments (fragments which are structurally weak such as shale, soft sandstone, limonite concretions, gypsum, weathered schist or cemented gravel) ……..	3.0
b.	Coal and lignite ……	1.0
c.	Clay lumps ……	0.25
d.	Material passing the No. 200 sieve ……..	1.00
e.	Thin or elongated pieces (length greater than 5 times average thickness)	10.00
f.	Other local deleterious substances	1.00

Notes: 1. In the case of crushed aggregate, if all the material finer than the 200 mesh sieve consists of the dust of fracture essentially free of clay or shale, Item 4, Maximum Per Cent by Weight, may be increased to 1.5.

2. The sum of the percentages of Items No. a, b, c, d, and f shall not exceed 5.0.

3. When the coarse aggregate is subjected to five alternations of the sodium sulfate soundness test, the weighted percentage of loss shall be not more than nine.

4. Alternate freeze/thaw tests for soundness will not be performed.

5. The percentage of wear as determined by AASHTO T 96 shall not exceed 40.

COARSE AGGREGATE GRADATION TABLE
Table 03050.1

Size	Amounts Finer Than Each Lab. Sieve (Sq. Openings), % By Weight							
Number	2”	1-1/2”	1”	¾”	½”	3/8”	No. 4	No.8
4	100	90-100	20-55	0-15	----	0-5	----	----
467	100	95-100	----	35-70	----	10-30	0-5	----
57	----	100	95-100	----	25-60	----	0-10	0-5

67	----	----	100	90-100	----	20-55	0-10	0-5

3.04 WATER.
The water used in mixing concrete shall be clean, free from oil, acid, strong alkalis, organic or vegetable matter.

3.05 AIR-ENTRAINING ADMIXTURES.

A. Air-Entraining Admixtures shall conform to the requirements of AASHTO M 154, except that the tests for bleeding, bond strength and volume change will not be required.

B. The Purchaser will maintain a list of qualified products. The Subcontractor shall be required to furnish a material that appears on this list.

C. A product may become approved by furnishing test data from a recognized laboratory showing that the air-entraining admixture proposed for use conforms to the requirements of these Specifications. A recognized laboratory is defined as one of the following: A State Transportation Department Laboratory; a Federal Highway Administration Laboratory; or other laboratories which are approved by the Purchaser.

3.06 CHEMICAL ADDITIVES.

A. For portland cement concrete mixtures, these additives shall conform to the requirements of AASHTO M 194 covering the following five types:

1. Type A – Water reducing admixtures
2. Type B – Retarding admixtures
3. Type C – Accelerating admixtures
4. Type D – Water reducing and retarding admixtures
5. Type E – Water reducing and accelerating admixtures

B. Additionally, admixtures for increasing the flowable characteristics of concrete (super plasticizers) may be used, subject to the approval of the Purchaser for each class and intended use of the concrete. Such admixtures shall meet the applicable requirements of ASTM C 494. The use of a plasticizer shall not change the maximum water requirements for the approved design mix. When approved for use, the admixture shall be introduced into the mix in the manner and quantities recommended by the manufacturer.

C. Additives listed in items A through E above and super plasticizers may only be used with the written approval of the Purchaser. Before any admixture is approved, the manufacturer of the admixture or the Subcontractor shall furnish the Purchaser documentary evidence that the material proposed for use has been tested in accordance with the methods of test specified in AASHTO M 194 (or ASTM C 494 for super plasticizers) and meets the requirements of the Specification. Documentary evidence for all additives shall be the results of tests conducted by a testing laboratory inspected at regular intervals by the National Bureau of Standards. The Purchaser may require a notarized certification from the manufacturer of any additives used stating that the material is identical with that originally approved and has in no way been changed or altered. Even through additives have been approved by the Purchaser, the Subcontractor shall be responsible for the successful use of the additives. No reduction in the cement content of the concrete as designed without chemical additives will be made when additives are permitted.

D. Calcium chloride additives will not be permitted.

3.07 CURING MATERIALS.
Curing materials shall be as specified in the various Specification Sections of Division 2 and as specified

below:

A. Water.
Water used in curing portland cement concrete shall be free from any substance which may be injurious to concrete when applied on the surface as a curing agent.

B. Burlap.
Burlap shall conform to AASHTO M 182, Class 3 or Class 4. If Class 1 or Class 2 burlap is permitted, at least two layers shall be use.

C. Liquid Membrane-Forming Compounds.
These compounds shall conform to AASHTO M 148. Where applied texture finish is specified, a Type 1-D, Class B, membrane which is compatible with the texture finish shall be used. Type 2 (white pigmented) membrane shall be used in all other applications, unless otherwise specified.

D. White Polyethylene Sheeting.
This material shall conform to AASHTO M 171.

3.08 FLY ASH.
Class C fly ash conforming to the requirements of ASTM C 618-84 may be used as a replacement for portland cement if approved in writing by the Purchaser. The maximum amount of cement being replaced by fly ash shall not exceed 15 percent. Before any fly ash will be approved for use, the Subcontractor shall furnish the Purchaser documentary evidence that the fly ash proposed for use has been tested in accordance with ASTM C 311-7 and meets the requirements of that specification. Documentary evidence shall be the results of tests conducted by a testing laboratory inspected at regular intervals by the National Bureau of Standards. Even though the fly ash has been approved by the Purchaser, the Subcontractor shall be responsible for its successful use. When a specific air content has been required and fly ash is being used, the air content shall be tested on each truck load of concrete at the batch plant and the tested value shall be indicated on the ticket.

PART 4 – EQUIPMENT

4.01 GENERAL.
Equipment and tools necessary for handling materials and performing all parts of the Work shall be subject to the approval of the Purchaser. The equipment shall be at the job site sufficiently ahead of the start of construction operations to be examined thoroughly and approved. The equipment and organization shall be of sufficient capacity to accomplish the maximum continuous concrete placement, as governed by the construction joints shown on the Plans and Design Standards or as directed by the Purchaser.

4.02 BATCHING PLANT AND EQUIPMENT.

A. General.
The batching plant shall include bins, weighing hoppers, and scales. If cement is used in bulk, a bin, hopper, and separate scale for cement shall be included. The Subcontractor shall provide adequate means for cement cut off checks. The weighing hoppers shall be properly sealed and vented to preclude dusting during operation. The bulk cement storage bin or hopper shall be provided with adequate means for sampling the cement in storage.

B. Bins and Hoppers.
Bins with adequate separate compartments for fine aggregates, each size of coarse aggregate, and cement shall be provided in the batching plant. Each compartment shall discharge efficiently and freely into the weighing hopper. Means of control shall be provided so that as the quantity desired in the weighing hopper is being approached, the material may be added slowly and shut off with precision. A port or other opening shall be provided for removing an overload of any one of the several materials from the hopper. Weighing hoppers shall be constructed so as to

eliminate accumulations of tare materials and to discharge fully without jarring the scales. Partitions between compartments, both in bins and in hoppers, shall be ample to prevent spilling under any working conditions.

C. Scales.

1. The scales for weighing aggregates and cement shall be of either the beam type or the springless-dial type. They shall be accurate within 0.5 percent throughout the range of use. The value of the minimum graduation on the scale for weighing cement shall not be greater than 5 pounds. The value of the minimum graduation on the scale for weighing amounts of aggregates up to 10,000 pounds or more shall be not greater than 10 pounds. The value of the minimum graduation of scales used in weighing amounts of aggregate 10,000 pounds or more shall be not greater than 0.1 per cent of the nominal capacity of the scales but shall not exceed 50 pounds. When beam type scales are used, provision, such as a “tell-tale” dial, shall be made for indicating to the operator that the required load in the weighing hopper is being approached. The “tell-tale” device on weighing beams shall indicate critical position clearly. Poises shall be designed so that they cannot be easily removed from the beam and can be held firmly in place. The weigh beams and “tell-tale” device shall be in full view of the operator while charging the hopper, and he shall have convenient access to all controls.

2. Scales shall be tested no less than once monthly by a certified scale testing company. Testing shall meet the requirements of applicable City ordinances and State law. The Subcontractor shall have available not less than 10 standard 50 pound weights meeting the requirements of the U.S. Bureau of Standards for calibrating and testing weighing equipment. The person dispensing weighed material shall certify that the amounts of materials used is in accordance with quantities shown on the delivery ticket.

D. Equipment For Structural Concrete.

1. The requirements for batching plants shall be as prescribed above, except that when approved by the Purchaser, the requirement for storage compartments in addition to weigh bins, for fine and coarse aggregates may be waived, provided the batching tolerances specified in Specification Section 03050 Paragraph 5.02.A are maintained.

2. Ample and satisfactory equipment for conveying concrete from the mixer to final position in the forms shall be provided. Closed chutes or pipes shall be used when concrete is to be dumped or dropped for a distance greater than 5 feet. Where steep slopes are required, the chutes shall be equipped with baffle boards or shall be in short lengths that will enable the direction of movement to be reversed. Tremies for placing seal concrete under water shall consist of a water tight tube 10 inches to 14 inches in diameter. It shall be constructed so that the bottom can be sealed and opened after it is in place and fully charged with concrete. It shall be supported so that it can be easily moved horizontally to cover all the work area and vertically to control the concrete flow.

4.03 MIXERS.

A. General.

1. Concrete may be mixed at a central point or wholly or in part in truck mixers. Each mixer shall have attached in a prominent place a manufacturer’s plate showing the capacity of the drum, in terms of mixing and agitating capacity, and the speed of rotation of the mixing drum or blades for both mixing and agitation.

2. Mixers shall be capable of combining the aggregates, cement, additives when specified, and water into a thoroughly mixed and uniform mass within the specified mixing period. They shall have a minimum capacity sufficient to comply with minimum production requirements.

3. Mixers shall be equipped with an approved device for accurately measuring water within a range of error of not more than one percent. The amount of water used in each batch shall be shown by an indicator which is accurately calibrated and easily read.

4. Central plant mixers shall be equipped with an approved batch meter and timing device which will automatically lock the discharge lever during the full time of mixing and release it at the end of the mixing period. This device shall be equipped with a bell or other suitable warning device that will give a clearly audible signal each time the lock is released. In case of failure of the timing device, the mixer may be used for the balance of the day while it is being repaired, providing the Subcontractor furnishes a satisfactory means of determining the mixing time.

B. Mixers At Site Of Construction.
Mixers at the site of construction will not be permitted, unless permitted by the Purchaser.

C. Truck Mixers And Truck Agitators.
Truck mixers used for mixing and hauling concrete and truck agitators used for hauling central-mixed concrete shall meet all the applicable requirements under Paragraph A above, and in addition, the manufacturer's plate shall indicate the various uses for which the equipment is designed, the gross volume of the drum, and the minimum and maximum speed of rotation of the drum or blades for charging, mixing and agitating. Trucks equipped for mixing shall be equipped with an approved device for recording the number of revolutions of the drum or blades. Mixers or agitators used to mix and transport paving concrete shall be of the hydraulic drum lift type or other especially designed types which will discharge low slump concrete (1 – 2 ½ inch) at a satisfactory rate without segregation.

D. Nonagitator Trucks.
Bodies of nonagitator hauling equipment for concrete shall be smooth, mortar tight, metal containers, and shall be capable of discharging the concrete at a satisfactorily controlled rate without segregation. Covers shall be provided when needed for protection of the concrete. Nonagitator trucks may be used only with approval of the Purchaser.

E. Admixture Induction.
A satisfactory method and equipment for setting the dosage for admixtures must be furnished and if admixtures other than air entraining agents are used, they shall be added in the manner and in the dosage recommended by the manufacturer.

F. Vibrators.
Vibrators shall be of an approved type and design, and shall operate under load at the rate as recommended by the manufacturer and approved by the Purchaser. For concrete structures, all concrete to be vibrated shall be compacted by means of approved high frequency internal vibrators or other approved types of vibrators immediately after being deposited in the forms. At least two vibrators in good operating condition and tow sources of power shall be available at the site where more than 25 cubic yards of concrete are to be poured. The use of external vibrators for compacting concrete will be permitted where the concrete is inaccessible for adequate compaction, provided the forms are sufficiently rigid to prevent displacement or damage from external vibration and approved by the Purchaser. For concrete pavement, the frequency of surface vibrators shall not be less than 3,500 impulses per minute and the frequency of the internal type shall not be less than 5,000 impulses per minute for tube vibrators and not less than 7,000 impulses per minute for spud vibrators. When spud type internal vibrators, either hand operated or attached to spreader or finishing machines, are used adjacent to forms, they shall have a frequency not less than 7,000 impulses per minute. For prestressed concrete, all concrete shall be thoroughly compacted with approved high frequency vibrators operating at a minimum of 7,000 vibrations per minute.

5.01 STOCKPILING AGGREGATES.

A. Sites for aggregate stockpiles shall be grubbed and cleaned prior to storing aggregates, and the ground shall be firm and smooth and well drained. A cover of at least three inches of aggregate shall be maintained in order to avoid the inclusion of soil or foreign material. The stockpiles shall be built in layers not exceeding four feet in height, and each layer shall be completely in place before the next layer is started so as to prevent segregation. The material shall be deposited in such manner as to prevent coning, except in the case of aggregate composed essentially of material finer than the No. 4 sieve and base material.

B. Dumping, casting or pushing over sides of stockpiles will be prohibited, except in the case of aggregate for base material and fine aggregate materials.

C. Unless otherwise authorized, aggregates from different sources, different gradings or differing in specific gravity by more than 0.03 shall not be stockpiled together. Stockpiles of different types or sizes of aggregates shall be spaced far enough apart, or separated by suitable walls or partitions, to prevent the mixing of the aggregates.

D. When it is necessary to operate trucks or other equipment on a stockpile in the process of building the stockpiles, it shall be done in a manner approved by the Purchaser. Any method of stockpiling aggregate which allows the stockpile to become contaminated with foreign matter or causes excessive degradation of the aggregate will not be permitted. Excessive degradation will be determined by sieve tests of samples taken from any portion of the stockpile over which equipment has operated, and failure of such samples to meet all grading requirements for the aggregate shall be considered cause for discontinuance of such stockpiling procedure.

E. Stockpiles shall be maintained in a saturated surface dry condition to the extent possible.

5.02 HANDLING, MEASURING AND BATCHING MATERIAL.

A. General.

1. The batch plant site, layout, equipment and provisions for transporting material shall be such as to assure a continuous supply of material to the Work.

2. Aggregates shall be handled from stockpiles or other sources to the batching plant in such manner as to maintain a uniform grading of the material. Aggregates that have become segregated, or mixed with earth or foreign material, shall not be used. All aggregates produced or handled by hydraulic methods, and washed aggregates, shall be stockpiled or binned for draining at least 12 hours before being batched. Rail shipment requiring more than 12 hours will be accepted as adequate binning only if the car bodies permit free drainage. In case the aggregates contain high or non-uniform moisture content, storage or stockpile periods in excess of 12 hours may be required by the Purchaser. The Purchaser may require sprinkling of aggregate that has dried to the extent that it absorbs mixing water.

3. The fine aggregate and each size of coarse aggregate shall be separately weighed into the hopper or hoppers in the respective amounts set by the Subcontractor and approved by the Purchaser. Cement shall be measured by the sack or weight. Separate scales and hoppers shall be used for weighing the cement. The scales shall be equipped with a device to indicate positively the complete discharge of the batch of cement into the batch box or container. Ninety-four pounds of bulk cement shall be considered one sack. Batches involving fractional sacks will not be allowed except when bulk cement is used.

4. Batching plants equipped to proportion aggregates and bulk cement by weight by means

of automatic and interlocked proportioning devices of approved type may be used.

5. Batching shall be so conducted as to result in the required weights of each material being within a tolerance of 1.0 percent for cement and 1.5 percent for aggregates.

6. Water may be measured either by volume or by weight. The accuracy of measuring the water shall be within a range of error of not over 1.0 percent. Unless otherwise permitted, calibrated tanks for measuring water shall include an auxiliary tank from which the measuring tank shall be filled. The measuring tank shall be equipped with an outside tap and valve to provide for checking the setting unless other means are provided for readily and accurately determining the amount of water in the tank. The volume of the auxiliary tank shall be at least equal to that of the measuring tank.

7. The use of chemical additives shall be as prescribed under Paragraph 3.06 of this Specification and they shall be added to the mix using the methods and at the time and in the manner recommended by the manufacturer of the additive, subject to approval by the Purchaser.

8. Unless specifically provided in the contract, the furnishing and use of approved additives or admixtures and the other precautions necessary to provide satisfactory concrete and concrete products shall be considered subsidiary to the furnishing and placement of the concrete and any and all additional costs related thereto and risks resulting there from shall be borne by the Subcontractor.

9. Different types of cement shall not be mixed, nor shall they be used alternately. Where it is necessary for the color of the concrete to be uniform, only those cements which will produce similar color in concrete may be used alternately. The Purchaser shall designate which cements may be used alternately.

10. Air entraining agents shall be added to the mix by an approved procedure and by the use of an approved dispenser to assure an accurate proportioning of the agent.

11. All admixtures shall be measured with an accuracy of plus or minus 3.0 percent.

B. Limitations On Concrete Operations.

1. Mixing of concrete shall be discontinued in time to allow finishing to be completed in daylight hours, unless an adequate and approved artificial lighting system is provided and operated.

2. When concrete is being placed during hot weather, appropriate measures shall be taken to reduce the hazards of increased rate of cement hydration and high concrete temperatures. The temperature of the concrete at point of discharge shall not exceed 90^0 F. The Purchaser may require any or all, but not limited to, the following precautions to reduce the temperature of the concrete:

a. Sprinkle coarse aggregate stockpiles in a manner so as to distribute the water evenly and to prevent a variation of moisture within the stockpile.

b. Use crushed or chipped ice as a portion of the mixing water, or use water cooled by refrigeration or other means. If ice is used, it shall be substituted on a pound for pound basis for water and completely melted before the concrete is discharged from the mixer.

c. The Subcontractor may employ other means which he may have at his disposal if approved by the Purchaser. In order to minimize the number and extent of precautions as indicated during the production and use of concrete during hot weather, the

Subcontractor may use approved chemical admixtures for set-retarding purposes, with the Purchaser's approval. However, the use of such approved set-retarding admixtures shall not relieve the Subcontractor of the necessity for other precautions deemed necessary to minimize variability of the physical characteristics, strength, and other requirements of the green concrete.

d. Unless authorized in writing by the Purchaser, mixing and concreting operations shall be discontinued when a descending air temperature in the shade and away from artificial heat reaches 40^0F (if the temperature is expected to reach 35^0F or below), and not resumed until an ascending air temperature in the shade and away from artificial heat reaches 35^0F.

e. When concreting at temperatures above 35^0F, the aggregates or water shall be heated or cooled if necessary prior to being placed in the mixer so that the temperature of the resultant mixture will be not less than 50^0F nor more than 90^0F at the time of placement. If heating is required, the apparatus used shall heat the mass uniformly and shall be so arranged as to preclude the possible occurrence of overheated areas which might injure the concrete.

f. When concreting is authorized at temperatures 35^0F or less, the Purchaser will require the water or the aggregates or both to be heated to not less than 70^0F nor more than 150^0F. The temperature of the mixed, heated concrete shall be not less than 50^0F nor more than 100^0F at the time of placement. No concrete shall be placed on frozen grade nor shall frozen aggregates be used in the concrete.

g. When it is expected that the ambient temperature will drop below 35^0F, the Subcontractor shall provide sufficient canvas and framework, other types of housing, or to enclose and protect the concrete in such a way that the air surrounding the fresh concrete can be maintained at a temperature of not less than 45^0F and the temperature of the concrete shall not exceed 80^0F. The above conditions shall be maintained for a period of 120 hours after the concrete is placed. The Subcontractor shall be responsible for the quality of concrete placed during cold weather, and any concrete injured by frost action or freezing shall be removed and replaced at the Subcontractor's expense. When impending weather conditions indicate the possibility of the need for such temperature protection, all necessary heating and covering material shall be on hand ready for use before the Purchaser's permission is granted to begin placement.

3.05 MIXING CONCRETE.

A. General.

1. The concrete may be mixed in a central mix plant or in truck mixers. The mixer shall be of an approved type and capacity, and shall comply with the applicable requirements of Paragraph 4.03 of this Specification Section. Mixers shall be cleaned at suitable intervals. Equipment having components made of aluminum or magnesium alloys which would have contact with plastic concrete during mixing, transporting or pumping of portland cement concrete, shall not be used.

2. The batch shall be so charged into the drum that a portion of the mixing water shall enter in advance of the cement and aggregates. Mixing time shall be measured from the time all materials except water are in the drum. The flow of water shall be uniform, and all water shall be in the drum buy the end of the first 15 seconds of the mixing period. The throat of the drum shall be kept free of such accumulations as may restrict the flow of materials into the drum.

3. When mixed in a central mixing plant, the mixing time shall not be less than 60 seconds

nor more than 90 seconds. Mixing time ends when the discharge chute opens. Transfer time in multiple drum mixers shall be included in the mixing time. The contents of an individual mixer drum shall be removed before a succeeding batch is emptied therein.

4. The mixer shall be operated at the drum speed recommended by the manufacturer. Any concrete mixed less than the specified time shall be discarded and disposed of by the Subcontractor at his expense. Mixers for central mix plants shall not be operated at a capacity greater than the manufacturer's guaranteed mixing capacity.

5. Mixed concrete from the central mixing plant shall be transported in truck mixers, truck agitators or nonagitating trucks having special bodies. The time elapsing from the time water is added to the mix until the concrete is deposited in place at the site of the Work shall not exceed 30 minutes when the concrete is hauled in nonagitating trucks, nor 60 minutes when hauled in truck mixers or truck agitators. When high early strength concrete is used, agitator trucks only shall be used and the concrete shall be deposited in place at the site of the Work within 30 minutes from the time water is added to the mix, regardless of the method of transportation, unless otherwise approved by the Purchaser.

6. Truck mixers and truck agitators used to transport concrete from a central mixing plant and truck mixers used to mix concrete in transit from a central batching plant shall meet all applicable requirements of Paragraph 4.03 of the Specification Section, and in addition, the mixing speed and agitating speed shall be those recommended by the manufacturer of the mixer and the total revolutions at mixing speed shall not be less than 70 nor more than 100. Truck mixers and truck agitators shall be operated within the capacity recommended by the manufacturer.

7. Retempering concrete by adding water or by other means will not be permitted. Concrete that is not within the specified slump limits at time of placement shall not be used. Admixtures for increasing the workability or for accelerating the set will be used only when provided for in the Contract, or permitted by the Purchaser. The addition of admixtures to the mix shall be in accordance with the provisions of Paragraph 5.02.A of this Specification Section.

8. Tests for air content shall be made on samples of fresh concrete when and as directed. The air content shall be that specified under Part 6 of this Specification Section and shall be determined in accordance with AASHTO T 152, T 196 or T 199.

B. Ready Mixed Concrete.

1. Ready mixed concrete shall fully comply with ASTM C 94 for Ready Mixed Concrete and to the requirements of these Specifications. Ready mixed concrete shall be discharged from the mixer within 1 hour after the introduction of water, provided the air temperature or the concrete temperature does not exceed 70^0F. When the air temperature or concrete temperature exceeds 70^0F, the elapsed time between the addition of water to the mix and discharge shall not exceed 30 minutes. The 30 minute time limit for temperatures exceeding 70^0F may be extended to 1 hour, provided an approved admixture is used. The admixture shall be a water reducing and retarding agent meeting the requirements of Paragraph 3.06, Type D of this Specification Section and shall be used in accordance with the provisions of Paragraph 5.02.A of this Specification Section. The ready-mix plant furnishing the concrete shall have been inspected and approved for use as provided for in Part 4 of this Specification Section.

2. The delivery ticket accompanying each load of concrete shall show the class and quantity of concrete, the quantity of cement, aggregates, water, and additive used in the batch, and the time of batching. Materials used in the concrete shall be tested and approved.

6.01 GENERAL.

A. A Concrete Classification Table, Table 03050.2 is provided hereinafter to indicate to the Subcontractor the five classes of concrete to be use. The table contains certain criteria to be met in the design of job mixes for the different classifications of concrete. Data included are the minimum 28 day compressive strength of the concrete (14 day strength for Class B concrete), the range of slum allowed, the minimum cement content of the concrete, and the maximum water allowed. The Subcontractor shall be responsible for design of the concrete mix to be used for each classification of concrete within the limits of Table 03050.2, and for providing concrete to the Purchaser in accordance with the approved design mixes.

B. Unless otherwise specified in the Contract Documents all concrete shall contain an air entraining admixture. The concrete shall contain between 5 percent and 8 percent entrained air. Other admixtures may be used if specifically approved by the Purchaser. The use of calcium chloride will not be allowed.

C. The Purchaser may specify differing compressive strengths for the several classifications by notation on the Plans or in the Special Provisions, and those values shall govern over the values of these Specifications.

CONCRETE CLASSIFICATION TABLE

Table 03050.2

Class Of Concrete	Minimum 28-Day Compressive Strength (psi)	Slump In Inches	Min. Cement Factor-Sacks/CY **(3)** Gravel Course Aggregate	Min. Cement Factor-Sacks/CY **(3)** Limestone Course Aggregate	Min. Cement Factor-#/CY **(3)** Gravel Course Aggregate	Min. Cement Factor-#/CY **(3)** Limestone Course Aggregate	Net Water Max. Gals./CY **(3)** Gravel Course Aggregate	Net Water Max. Gals./CY **(3)** Limestone Course Aggregate	Net Water Max-#/CY **(3)** Gravel Course Aggregate	Net Water Max-#/CY **(3)** Limestone Course Aggregate
A	3,000	3-5	6.0	5.5	564	517	36	33	300	275
AS	4,000	3-5	**(2)**	6.2	**(2)**	583	**(2)**	37.2	**(2)**	310
B	3,500 **(1)**	1-2 ½	6.2	5.8	583	545	34.1	31.9	284	266
C	2,500	2-4	5.0	4.5	470	423	34	30.6	283	255
P	5,000	1-3	**(2)**	7.0	**(2)**	658	**(2)**	35.0	**(2)**	292

(1) Minimum compressive strength @ 14 days. Minimum flexural strength @ 14 days of 550 psi per AASHTO T 22.
(2) Gravel Coarse Aggregate no permitted.
(3) Tabulated valves are for Type I cement conforming to the requirements of AASHTO M 85 only.

6.02 MIX DESIGN.

Prior to mixing any concrete for the project, the Subcontractor shall submit his proposed design mix and reports of tests for each classification of concrete to the Purchaser for approval. The design mix shall be submitted on a form that indicates the supplier and type of the concrete and materials to be used as well as the amounts of materials per cubic yard for at least the following items and units (based upon saturated surface dry aggregate):

A. Cement-Pounds
B. Coarse Aggregate-Pounds
C. Fine Aggregate-Pounds
D. Air Entraining Admixture – Ounces
E. Other Admixtures (if allowed) – Ounces
F. Water – Pounds
G. Fly Ash (if allowed) – Pounds

6.03 PROPORTIONING.

A. Each class of concrete shall be manufactured by combining the several materials prescribed in the design mix in the proportions necessary to obtain the specified compressive strength for each class. Proportioning shall be based upon the specified cement content, and the amount of water for each class of concrete shall not exceed the quantity shown in Table 03050.2. Below this limit, the quantity of water shall be adjusted to meet the slump requirements. Aggregate weights shown in the Subcontractor's mix design(s) shall be based on saturated surface dry aggregate; batch weights shall be corrected to compensate for surface moisture on the aggregate in order to determine the amount of water to be added at the mixer.

B. In addition to the requirements specified herein and on Table 03050.2, portland cement concrete for pavement, Class B, (Specification Section 02750) shall have a flexural strength at 14 days of not less than 550 pounds per square inch when tested in accordance with AASHTO T 22.

6.04 CHANGES IN MIX.

A. When approved by the Purchaser, the ration of coarse and fine aggregate may be adjusted in order to assure better workability or to accommodate placement by pumping. However, in no case shall the fine aggregate exceed 44 percent of the total aggregate.

B. If during the progress of the Work, the specific gravity of one or both of the aggregates change more than plus or minus 0.03 from those shown on the concrete design, the design weights shall be adjusted by a design change to conform to the new specific gravity.

6.05 HIGH-EARLY-STRENGTH CONCRETE.

A. High-early-strength concrete may be required in the Plans and Specifications or substituted at the request of the Subcontractor, subject to the approval of the Purchaser. When high-early-strength cement concrete is authorized, it shall conform to the requirements of Table 03050.2 except that the 28 day strength (or 14 day strength for Class B concrete) shall be obtained in 7 days. The use of Type I or Type III cement for high-early-strength concrete in lieu of using Type III cement. When type I cement is used, the concrete shall have a minimum of 7.6 sacks (714 pounds) of cement per cubic yard of concrete. If admixtures are used to obtain high-early-strength concrete, such admixtures may only be used if previously approved by the Tennessee Department of Transportation for similar uses of the concrete and if specifically approved for the project by the Purchaser.

B. The gradation of fine and coarse aggregates shall be the same as that approved for the concrete for which the high-early-strength concrete is substituted. All materials entering into the high-early-strength concrete shall be of the same kind and class as the materials entering into the

other part or parts of the facility constructed of the class of concrete for which high-early-strength is being substituted.

C. No additional compensation will be made if the Subcontractor elects to substitute high-early-strength concrete for any class of concrete. The unit price for the class for which the substitution is made shall be full compensation for the concrete.

PART 7 – TESTING

7.01 TEST SAMPLES.

The Purchaser shall provide for all test cylinders. All samples shall be cast, cured and tested by the Purchaser at its expense. The Subcontractor will be required to assist the Purchaser in securing necessary materials for casting the required number of cylinders. Testing ages will be 7 days and 28 days unless otherwise determined by the Purchaser. Laboratory cylinders shall be used to determine the quality of concrete produced. The number of cylinders to be cast daily for any quantity of concrete and laboratory tested, shall be specified by the Purchaser. With prior consent of the Purchaser, the Subcontractor may prepare field cylinders. These cylinders may be used as a gauge for early safe removal of forms where the Subcontractor requests earlier removal than set out in the Specifications.

7.02 CEMENT TESTING.

All cement used in the Work shall be pre-tested before use. Cement may be used upon completion of a satisfactory 3 day physical test made in accordance with current ASTM Specifications. Cement shall be tested by an approved commercial testing laboratory at the Subcontractor's expense.

7.03 CORE SAMPLES.

A. If the Purchaser's testing of cylinders indicates compressive strength less than required in Table 03050.2 for the class of concrete specified, the Subcontractor may, at his option, elect to drill core samples from the actual concrete placed. If the Subcontractor elects to drill (or is instructed by the Purchaser to drill) core samples from the hardened concrete, the costs of obtaining the cores and of repairing the core holes with nonshrinking grout shall be borne by the Subcontractor.

B. The cores shall be drilled as directed by the Purchaser, at the same approximate locations from which the test cylinder concrete was obtained. The locations of the drilled cores shall be selected so that the remaining structure will not be impaired or sustain permanent damage after the holes are repaired by the Subcontractor. The drilled samples shall be tested for compressive strength by the Purchaser, and the equivalent 28 day strength of the concrete placed and represented by the drilled core samples shall be determined. The Purchaser shall use the test results of the drilled cores to determine the acceptability of the concrete.

7.04 METHODS OF SAMPLING AND TESTING.

A. Test cylinders cast to determine acceptability for minimum AASHTO strength requirements shall be made and cured in accordance with AASHTO T 23 and tested in accordance with AASHTO T 22.

Test cylinders cast to determine when a precast unit or a structure may be put into service or to determine when a tensioning load may be transferred shall be cured by methods identical to those used in curing the concrete member, and tested in accordance with AASHTO T 22.

B. Drilled core samples shall be taken and tested in accordance with AASHTO T 24. Due to possible fracturing effect of the coring operation, drilled core samples having a compressive strength of 85 per cent or more of specified strength will be considered acceptable.

C. Slump shall be determined in accordance with AASHTO T 119 on the job site during each placement.

D. The amount of air entrained shall be determined by pressure or volumetric meters of approved design and in accordance with AASHTO Method T 152 or AASHTO Method T 196, except that AASHTO Method T 199 may be used after the accuracy of the Chace Air Indicator has been determined by comparison tests.

7.05 CONCRETE FAILING TO MEET STRENGTH REQUIREMENTS.

A. Concrete which has been mixed and placed in accordance with these Specifications, and which fails to meet the minimum 28 day strength requirements shall be removed and disposed of by the Subcontractor, at his expense, unless specifically authorized by the Purchaser, in writing, to remain in place. The removal shall be in such manner as will not cause damage to the remaining concrete or to other structural units or other facilities and property.

B. The Purchaser may, at his discretion, allow concrete which fails to meet the minimum strength requirement to remain in place. Payment for this concrete will be at a reduced price, to compensate the Purchaser for loss of durability. The amount of the reduction shall be determined by the Purchaser and shall be based on the particular circumstances.

PART 8 – MISCELLANEOUS

8.01 CONCRETE MIXED AND/OR BATCHED OFF PROJECT SITE.
Concrete may be mixed and/or batched off the immediate project site, subject to specific approval of the Purchaser and under the direct supervision of the Subcontractor. A delivery ticket (certified by the batch plant) showing mix, quantity of cement, quantity of fine and coarse aggregate, moisture content, total water and gallons per cubic yard of concrete shall be furnished to the Purchaser with each delivery of concrete and the Subcontractor shall show to the satisfaction of the Purchaser that the plant is so located and equipped as to produce and deliver concrete fully meeting the specification requirements.

8.02 MEASUREMENT AND PAYMENT.
The methods of measurement and payment for concrete shall be as specified in Divisions 2 and 3 of these Specifications for each particular item constructed by the Subcontractor.

END OF SECTION 03050

SECTION 09910 – CURED IN PLACE PIPE (CIPP) INSTALLATION

PART 1 - GENERAL

1.01 CONTRACTOR LICENSE

Subcontractors must be licensed to operate in the State of Tennessee under the appropriate classification as determined by the laws of the State of Tennessee. Classification for this project shall be MU A or B- Municipal and Utility Construction.

1.02 WORK INCLUDED

A. The work covered by this contract will be for the installation of Cured-In-Place- Pipe (CIPP) in existing sanitary sewer lines that the Purchaser has selected for inclusion in this bid package. The contractor will go to each site and will ascertain the appropriate thickness of the CIPP material needed for the repair and will measure the actual lengths. The Purchaser will review and approve the design and will inspect the installation. The pipes selected for the work shown in the bid form range in size. The lengths of each run shown on the bid form are based upon plan measurements. The contractor will be paid based upon actual lengths determined from the post construction video log which may be less or more than the original bid quantities. The price for each size will include all bypass pumping, “tube” insertion and curing as well as any other work needed to complete the CIPP installation, and does not include heavy cleaning, point repairs, or cutting of protruding service laterals. CCTV work shall be done and paid for in accordance with Specification Section 00003.

B. This specification covers the general requirements for the referenced specifications, CIPP manufacturer and installer qualifications, submittal and guaranty guidelines, materials, pre-installation and installation procedures, and testing.

C. The object of this work is to pro-actively rehabilitate those sanitary sewers selected for this contract since failure could be very disruptive, hazardous to public health, and/or very expensive to repair after failure. It is critical that both the Product and the Installer have the ability to meet or exceed all requirements of the Purchaser and the CITY. The intent of this Specification is to cover the minimum acceptable quality standards of a CIPP method for the complete rehabilitation of the designated sanitary sewer pipes.

1.03 DESCRIPTION OF SERVICES PROVIDED BY CONTRACTOR

It is the intent of this specification for the Subcontractor to provide for the rehabilitation and repair of certain underground piping ranging in diameter by the trenchless cured-in-place pipe reconstruction method.

A. The process is defined as the rehabilitation of existing sewer lines by installation of a thermosetting resin impregnated flexible felt fiber tube coated on one side with polyurethane which is installed in the sewer by pulling it into place or by water column inversion. Curing is accomplished by circulating hot water or steam throughout the length of the inverted tube to cure the thermosetting resin into a hard impermeable pipe with the polyurethane coating on the interior surface of the reconstructed pipe. After reconstruction, the “cured-in-place pipe” (CIPP) shall provide flow capacity greater than 100 percent of the original pipe’s flow capacity when new. The reconstructed pipe shall extend the full length of the original pipe and shall provide a structurally sound, joint-less, close fitting and corrosion resistant conduit suitable for service in a municipal sanitary sewage environment.

B. The following work and components shall be provided by the Subcontractor:

1. Traffic Control if needed (in accordance with local, state and federal regulations)
2. Pre-Installation Cleaning and CCTV Inspection of Each Pipe Segment (including bypass pumping operations)
3. Insertion and curing of the resin-impregnated tube.
4. Post-Lining Inspection and Testing (see PART 4 – FIELD QUALITY CONTROL of these specifications)
5. Reopening all existing service connections
6. Post Rehabilitation CCTV inspection of the Pipe Segment
7. Site Cleanup

1.04 REFERENCED SPECIFICATIONS

This specification references American Society for Testing and Materials (ASTM) standards, which are made part hereof by such reference, and shall be the latest edition and revision thereof. If there is a conflict between those standards and this specification, this specification will govern.

A. Installation and material tests of cured-in-place pipe (CIPP) must meet the minimum requirements demonstrated in the latest revisions of the following ASTM standards:

ASTM D543 – Standard and Practice for Evaluating the Resistance of Plastics to Chemical Reagents

ASTM D638 – Standard Test Method for Tensile Properties of Plastics

ASTM D790 – Standard Test Method for Flexural Properties of Unreinforced and Reinforced Plastics and Electrical Insulating Materials

ASTM F1216 – Standard Practice for Rehabilitation of Existing Pipelines and Conduits by the Inversion and Curing of a Resin-Impregnated Tube

ASTM F1743 – Standard Practice for Rehabilitation of Existing Pipelines and Conduits by Pulled-in-Place Installation of Cured-in-Place Thermosetting Resin Pipe (CIPP)

ASTM D5813 – Standard Specification for Cured-in-Place Thermosetting Resin Sewer Piping Systems

ASTM D2990 – Standard Test Methods for Tensile, Compressive, and Flexural Creep and Creep-Rupture of Plastics

B. Any approved process shall strictly adhere to this specification with regard to all standards and requirements. Where discrepancies exist, or any latitude is either inferred or interpreted between this specification and ASTM product and process standards, this Specification shall govern.

C. The City of Memphis Standard Construction Specifications

1.05 PRE-SUBMITTAL

Alternate materials and/or methods must be approved by the Purchaser not less than 10 calendar days prior to bid date. The purpose for these submittals is to allow the Purchaser the opportunity to conduct a complete, thorough and objective evaluation of the proposed alternative CIPP products to determine if the submitted products meet all quality and utility standards provided by

the specified products. Products submitted for approval must provide independent, third party test data supporting the long term performance and structural strength of the product and such data shall be satisfactory to the Purchaser. The Purchaser will evaluate only the alternate CIPP Product submittal(s) received by the stipulated time frame and provide review response(s) to all bidders by issuing addenda a minimum of 3 calendar days prior to the bid date. Any and all bids received that are not based on a listed acceptable CIPP product or a Purchaser reviewed and approved alternative CIPP product will be rejected. The decision of the Purchaser relative to pre-approval or subsequent approval of manufacturers, contractors and/or installers, qualifying superintendents and crews shall be final and without recourse.

1.06 QUALITY ASSURANCE

A. Acceptable CIPP Manufacturers

Pre-approved resin-impregnated cured-in-place pipe (CIPP) products shall be Insituform® (Insituform Technologies), MooreLiner (Moore Construction), products of Inland Pipe Rehabilitation, LLC (Improved Technologies Group/Texas Repipe), products of Spiniello Companies, SAK Construction LLC, Layne Inliner (Reynolds), A&H Contractors, Inc., Suncoast Infrastructure Inc., Visu-Sewer, or approved equal.

B. MAINLINE CURED IN PLACE PIPE

Any currently approved process or subsequently approved equal shall strictly adhere to this specification with regard to all standards and requirements. Where discrepancies exist between this specification and established manufacturer's product and process specifications, this specification shall govern. All approved manufacturers must submit the qualifying documentation for the specific individuals who will be in charge in the field on this particular project. Any manufacturer which submits a proposal and does not include the information on the specific supervisory personnel who will be installing this job will have its bid disqualified. Any bidder which submits certain individuals for approval cannot then substitute other individuals for the actual construction without written approval of the Purchaser. Failure by the bidder/Subcontractor to meet this stipulation will be cause for termination of any executed contract and disqualification from future bids.

C. LATERAL MAINLINE INTERFACE

1. Rehabilitation of lateral-mainline interface by lining specified herin
    a. Follow Mainline CIPP for sample submissions, reviews, results, and corrections
2. Rehabilitation of lateral-mainline interface by resin injection seal
    a. Record and document installer's certificate of training number and manufacturer's batch identification number.
    b. Mark identification number on corresponding resin sample (5 to 6 ounce cubes) poured at start of each new batch at beginning of each day.
    c. Submit 10 percent of prepared samples to independent third party laboratory for testing under Engineer's direction.
    d. If half of samples fail, additional 10 percent may be required to be tested.
    e. Record resin injection process with CCTV for Engineer's approval.
    f. Cure: Follow manufacturer's recommendations.
    g. Clearly see resin ring at lateral-mainline interface.
3. Follow Mainline CIPP for review and correction process

1.07 QUALIFICATIONS

A. The Subcontractor performing the CIPP lining work shall be experienced and equipped to complete this work expeditiously and in a satisfactory manner, and shall be certified and/or licensed as an installer by the CIPP lining manufacturer.

B. The Subcontractor shall have successfully installed a minimum of 500,000 feet (total) or 2,000 manhole-to-manhole line sections for the proposed CIPP lining for at least a 5-year continuous period installing CIPP linings in pipe of a similar size, length, and configuration as contained in this Contract as documented by verifiable references.

C. The full-time, on-site supervisor who will supervise the CIPP lining installation under this Contract shall have successfully installed a minimum of 150,000 feet (total) of the proposed CIPP lining for at least a 3-year period as documented by verifiable references.

D. The Subcontractors personnel including the supervisor, the foreman, and the lead crew personnel for the CCTV inspection, resin wet-out, the CIPP lining installation, lining curing and the robotic service reconnections each must have a 3-year minimum total experience with the CIPP technology proposed for this Contract, and must have demonstrated competency and experience to perform the scope of work contained in this Contract. The name and experience for each lead individual performing work on this contract shall be submitted. Personnel replaced by the Subcontractor on this contract shall have similar, verifiable experience as the personnel originally submitted for the project.

E. The Purchaser reserves the right to approve or disapprove the Subcontractor, Supervisor, and/or manufacturer based on the submitted qualifications and a follow-up interview.

1.08 SUBMITTALS

A. Submit product data, design calculations, installation details, and shop drawings to the Purchaser. The Subcontractor shall provide this information without delay or claim to any confidentiality. Submittals shall include the following and be divided into three sections of qualifications, pre-installation, and post-installation:

1. CIPP lining supplier’s name and a materials list
2. CIPP lining schedules including field-verified lengths and diameters for all CIPP linings and appurtenances required. Plans should include map(s) showing insertion points for all CIPP installations.
3. Shop drawings and product data to demonstrate compliance with these specifications and identify construction materials including resins, catalysts, felt, etc., felt manufacturer and facility location, wet-out facility location, etc.
4. Manufacturers’ shipping, storage, and handling recommendations for all CIPP system components.
5. MSDS sheets for all materials to be furnished for the project
6. Detailed installation procedures including CIPP lining production schedule, acceptable inversion heads and pressures, inversion procedures, curing and cool-down procedures and temperatures, and times for each process stage
7. Prior to each CIPP lining shipment, certified test reports showing the CIPP lining for this Contract was manufactured and tested in accordance with all ASTM Standards specified and referenced herein.
8. An odor control plan which ensures project specific odors will be minimized at the project site and surrounding area
9. A detailed public notification plan shall be prepared and submitted including detailed staged notification to residences affected by the CIPP installation.
10. A complete description for the proposed wet-out procedure for the proposed technology

11. Wet-out forms with detailed information including, but not limited to: resin volumes and/or weights, CIPP liner length, roller gap settings, start times, finish times, gel times, resin injection locations, and any other pertinent data documenting the wet-out for each CIPP liner section manufactured.
12. Design data and specification data sheets listing all parameters used in the CIPP liner design and thickness calculations based on ASTM F1216. All calculations shall be prepared under and stamped by a Tennessee registered professional engineer.
13. A list with all service laterals abandoned or reconnected as part of the work as further defined herein.
14. Manufacturer's recommended cure method for each CIPP liner diameter and thickness to be installed including detailed curing procedures describing the curing medium and the application method.
15. CIPP lining curing log reports documenting the liner installation for all sewer segments. The CIPP lining reports shall document all lining installation details including manhole numbers, street names/sewer location, project number, date, time, temperature, curing temperature, curing time, CIPP liner thickness, etc. A sample report shall be submitted to the Construction Manager for approval prior to installing any CIPP lining.
16. Pre- and post-rehabilitation CCTV inspection data as further defined herein. The pre-rehabilitation CCTV inspection shall be performed in the presence of the Purchaser's Resident Project Representative.
17. Ten reports from projects within the past 2 years from independent testing laboratory for liner materials analysis showing: elasticity modulus as determined by appropriate ASTM standard and flexural stress as determined by appropriate ASTM standard. The lining must be the same resin system and felt tube materials as proposed for this project.
18. Installed liner(s) samples for testing to be performed by an ASTM-certified independent testing laboratory, as described further herein.
19. Data on the maximum allowable stresses and elongation of the tube during installation and the means the Subcontractor will use to monitor stress and elongation.
20. A detailed summary about the proposed quality controls to be performed by the Subcontractor including:
    a. Proposed procedures for quality control.
    b. Product sampling and testing method and frequency for product sampling and testing in raw material form and cured product form.
    c. Inspection forms and guidelines for quality control inspections.

B. Submit the name and experience for lead personnel including verifiable references, as described in the Qualifications in subsection 1.07.

PART 2 – PRODUCTS

2.01 PATENTS

As with any City of Memphis contract with a consultant and/or contractor, the bidder must prepare his bid package with the knowledge that it is his responsibility to advise the Purchaser and the CITY of any patent or copyright infringement associated with this project. The Subcontractor ultimately hired to do this work shall bear responsibility for payment of all royalties and license fees. All costs associated with patent infringement shall be borne by the Subcontractor.

2.02 MATERIALS

A. The CIPP material shall be fabricated from materials which, when cured, will be suitable

for the environment intended, i.e., meeting the chemical resistance requirements from ASTM F1216. The final product must not deteriorate, corrode, or lose structural strength in any manner that will preclude meeting the expected design life. The structural performance of the inverted cured-in-place pipe must be adequate to accommodate all internal and external loads (live and dead) over its service life. The CIPP liner shall be designed considering the host pipe is fully deteriorated, a prism loading, a soil loading of 120 pcf, a 2.0 factor of safety, a 2-percent ovality, a 5-percent maximum deflection, a 1,000 psi modulus of soil reaction, a flexural modulus of 250,000 psi for Standard Polyester, 400,000 psi for Enhanced Polyester, 4,500 psi flexural strength, a 3,000 psi tensile strength, a lining enhancement factor (K) of 7 maximum, H-20 live loads where applicable, 50-percent long-term modulus reduction factor and a hydrostatic load beginning at the surface.

B. The finished pipe will be such that when the thermosetting resin cures, the total wall thickness will be a homogeneous and monolithic felt and resin composite matrix that will be chemically resistant to exposure to domestic sewage. When cured, the installed CIPP must allow for sufficient resin to account for migration into the host pipe without adversely affecting the integrity of the CIPP. No encapsulating or containment material layer between the resin saturated felt and the host pipe will be permitted. No annular space will be allowed between the tube and the host pipe.

C. Pricing for cured-in-place pipe will be based on original as-constructed nominal pipe diameters. It will be the responsibility of the Subcontractor to custom manufacture cured-in-place pipe to conform to pipe diameters other than those listed, due to deterioration or other factors, without additional compensation.

2.03 LINER TUBE

A. The tube shall consist of one or more layers of absorbent non-woven felt fabric and meet the requirements of ASTM F1216. In the event of a discrepancy between the referenced ASTM requirement and the CITY's Specification as modified by SARP10 Program, the CITY's Specification as modified by SARP10 Program will govern.

B. The acceptable liner tube shall be constructed under ISO 9002 certified procedures. (Proper certification shall be submitted with the "alternative products application"). At time of manufacture, each lot of liner shall be inspected for defects and tested in accordance with applicable ASTM and industry standards.

C. Liner tube manufacturers must be able to certify that a minimum of 1 million linear feet has been installed in cured-in-place pipe applications within the US.

D. The Subcontractor shall measure the inside diameter of the existing pipelines in the field prior to ordering lining, so the lining can be installed in a tight-fitted condition. The Subcontractor shall verify the lengths in the field prior to ordering and prior to impregnating the tube with resin to ensure the tube will have sufficient length to extend the run's entire length. The CIPP lining's length shall be as deemed necessary by the Subcontractor to effectively carry out inserting and sealing the CIPP lining at the outlet and inlet manholes.

1. The CIPP lining tube shall be manufactured or fabricated to a size that will tightly fit the internal circumference of the sewer being rehabilitated after being installed and cured.
2. The CIPP lining shall be able to fit into irregularly shaped pipe sections and through bends and dips (up to 45 degrees) within the pipeline.

3. Allowance for longitudinal and circumferential expansion shall be taken into account when sizing and installing the CIPP lining.
4. The tube shall be properly sized to the existing pipe's diameter and the length to be rehabilitated, and be able to stretch to fit irregular pipe sections and negotiate bends.

E. The wet-out tube shall have a uniform thickness that, when compressed at installation pressures, shall meet or exceed design thickness.

F. The tube shall be manufactured to a size that, when installed, it shall tightly fit the internal circumference and length of the original pipe. Allowances shall be made for circumferential stretching during inversion.

G. Overlapped layers of felt fabric in the longitudinal seams that cause abnormalities (lumps) in the final product shall not be used. Seams in the felt liner tube shall also have cross sectional strength greater than un-seamed felt fabric.

H. The outside layer of the tube, before installation, shall have an impermeable polyurethane plastic coating, with a roughness coefficient (Manning's "n") no greater than 0.010. This coating shall be an impermeable, flexible membrane that shall contain the resin and facilitate monitoring of resin saturation during the resin impregnation (wet-out) procedure. This coating shall form the inner layer of the finished pipe and is required for enhancement of corrosion resistance, flow and abrasion properties.

I. At the time of delivery to the jobsite, the tube shall be homogeneous across the entire wall thickness containing no intermediate or encapsulated layers. It shall be uniform in color, free of cracks, holes, blisters, or deleterious faults. No foreign materials may be included in the tube that may cause de-lamination in the cured liner, and no dry or unsaturated areas or layers shall be evident.

J. The wall color of the interior liner surface after installation shall be a light-reflective color (preferably white) so that a clear, detailed inspection with closed-circuit television equipment may be conducted.

K. The outside of the tube shall be marked for distance at regular intervals not to exceed 10 feet. Such markings shall include the Manufacturers name or identifying symbol.

L. The minimum liner length shall be that deemed necessary by the Purchaser to effectively span the distance between manhole sections of the segment to be lined unless otherwise specified. The line lengths shall be verified by the Subcontractor in the field before impregnation of the tube with resin.

M. Product Handling – Subcontractor shall use all means necessary to protect lining material during transportation, before, during, and after installation and to protect the installed work and materials of all other trades. In the event the liner material is damaged, Subcontractor shall immediately make all repairs or replacements necessary to the approval of the Purchaser, at no additional cost to the Purchaser.

2.04 RESIN

A. The resin class for CIPP installed under this contract shall be a Standard or Enhanced Polyester unless otherwise directed by the Purchaser due to site-specific field conditions and/or design requirements.

Unless otherwise specified, the Subcontractor shall furnish a resin and catalyst system compatible with the reconstruction process that provides the cured physical strengths specified herein.

B. Standard Polyester Resin

1. The resin used shall be high-grade corrosion resistant isophthalic polyester specifically designed for the CIPP being installed. Only premium, non-recycled resin shall be used. The acceptable resin, (Reichhold Polylite® 33420 or approved equal) shall have been tested according to ASTM D2990, D5813, and F1216 by accredited, third-party testing facilities. Results of these tests shall be made available to the Purchaser upon request.

2. The resin must be manufactured under ISO 9002 certified procedures. The resin vendor must be able to reference the corrosion scale with the resin itself having a heat deflection temperature greater than 212 degrees Fahrenheit. Only PREMIUM, NON-RECYCLED resins will be accepted.

C. Enhanced Polyester Resin

1. The resin used shall be a corrosion resistant enhanced thixotropic, medium reactivity, high viscosity, and rigid, chemical resistant isophthalic resin. These resins contain a mineral filler to enhance mechanical properties and are specifically formulated for use in the cured-in-place pipe (CIPP) industry.

2. The acceptable resin, (Reichhold Polylite® 33420-E or approved equal) shall have been tested according to ASTM D2990, D 5813 and F 1216 by accredited third party testing facilities. Results of these tests shall be made available to the City upon request.

3. The resin must be manufactured under ISO 9002 certified procedures. The resin vendor must be able to reference the corrosion scale with the resin itself having a heat deflection temperature greater than 224 degrees Fahrenheit. Only PREMIUM, NON-RECYCLED resins will be accepted.

D. No Intermediate Mixing Facilities Allowed

The resin shall be shipped directly from the resin manufacturer's facility to the CIPP wet-out facility. The resin shall not be sent to any intermediate mixing facility. Copies of the shipping documents from the resin manufacturer shall be submitted to the Purchaser indicating dates of shipment, originating and receiving locations.

E. Urethane-modified Vinyl Ester Resins (if applicable)

1. The resin used shall be a high-grade, premium vinyl ester combining outstanding corrosion resistance and high-temperature performance with excellent laminating characteristics. The resin must be manufactured under ISO 9002 certified

procedures. (Proper certification shall be submitted with the “alternative products application”).

2. The resin vendor must be able to reference the heat corrosion scale with the resin itself having a heat deflection temperature greater than 244 degrees Fahrenheit. Only premium, non-recycled resins will be accepted. PET resins or those containing enhancement additives and/or fillers will not be accepted without prior written approval by the PURCHASER.

2.05 Lateral-Mainline Interface Seal:

A. ASTM F2561-06 following mainline CIPP wet-out requirements
   1. 2-piece Hydrophilic, Full Circle Structural Connection Seal
      a. Approved manufacturers:
         i. LMK Enterprises Inc.
         ii. BLD Services
         iii. Or equal

B. Resin injection process following manufacturer’s recommendation.
   1. Injected resin without the use of grout.
      a. Approved manufacturers
         i. Janssen Process Company
         ii. ProKasro
         iii. Or equal

2.06 ADDITIONAL PROVISIONS

In order that the Purchaser is assured that the specified resin is used for the duration of the project, the following provisions are made part of this specification:

A. The Subcontractor shall designate a wet-out facility and shall provide wet-out liner tubes from the designated facility only. If determined to be absolutely necessary, an alternate wet-out facility may be utilized with the approval of the Purchaser. If an alternate facility is used to supply wet-out liner tubes, the Subcontractor shall provide all necessary documentation to the satisfaction of the Purchaser to ensure compliance with the specifications of this contract.

B. The Subcontractor shall place a sampling valve in-line at a point in the resin/catalyst mixing stage so that a sample of non-catalyzed resin may be taken. A second sampling valve shall be placed in-line at a point after the resin/catalyst mixing stage, but prior to catalyzed resin injection into the liner so that a resin sample may be taken. Both sampling valves shall be left in place for the duration of the contract.

C. The Purchaser shall have the right to inspect the designated wet-out facility and draw samples from one or both sampling valves without prior notice to the Subcontractor.

D. Resins shall be tested as specified by ASTM D5813, and the same frequency as liner samples, and the tests shall be performed by an independent lab and paid for by the Subcontractor.

E. The Purchaser may perform Infrared Scans (IR Scans) at its expense to insure resin quality and consistency throughout the project.

2.06 CATALYST SYSTEMS

A. The exact mixture ratio of resin and catalyst shall also be submitted. The catalyst system shall be identified by product name. The resin/catalyst ratio shall be approved by the resin manufacturer in writing. The catalyst system shall be made up of a primary catalyst and a secondary catalyst. Catalyst shall be compatible with the resin to control resin cure time and also compatible with the reconstruction process that provides cured physical strengths specified herein.

B. Cure schedules for the CIPP shall be submitted to the Purchaser for review. The proposed curing schedules/process shall be approved by the resin manufacturer in writing. Cure schedules shall include specific information on “step curing” procedures, “cooking times”, duration and “cool down” procedures – all to be approved by the resin manufacturer in writing.

C. The resin shall be shipped directly from the resin manufacturer’s facility to the CIPP wet-out facility. The resin shall not be sent to any intermediate mixing facility. Copies of the shipping documents from the resin manufacturer shall be submitted to the Purchaser indicating dates of shipment, originating and receiving locations.

D. The Subcontractor shall submit a Certificate of Authenticity from the resin manufacturer for each shipment to the wet-out facility to include the date of manufacture and Heat Distortion Temperature. This information shall be submitted before the manufacture or installation of any CIPP.

2.07 PIPE DESIGN

A. Liner Thickness

The Subcontractor shall submit liner thickness calculations to the Purchaser for review. Overall, the hydraulic profile shall be kept as large as possible. The CIPP shall at a minimum have the full flow capacity of the original pipe before rehabilitation. The CIPP shall be designed in accordance with the applicable provisions of ASTM F1216 and D2412 for “fully deteriorated gravity pipe conditions” and shall meet the following design conditions:

1. AASHTO H-20 Live Load with two trucks passing for CIPP in streets (16,000 lbs.)
2. A soil modulus of elasticity of 1,000 psi, soil weight of 120 pounds per cubic foot and a coefficient of friction of K_u’=0.13.
3. Standard Polyester Resin: Short-term flexural modulus of 250,000 psi and long-term modulus of 125,000 psi. Enhanced Polyester Resin: Short-term flexural modulus of 400,000 psi and long-term modulus of 200,000 psi. Initial flexural strength of 4,500 psi and long term flexural strength of 2,250 psi.
4. Safety factor of 2.0 shall be used.
5. Groundwater elevation at the ground surface.
6. Pipe ovality of 2% (unless actual field measurements prove otherwise).
7. Poisson ratio of 0.3.
8. Enhancement factor (K) of 7.

9. Service temperature range shall be 40 to 140 degrees F.
10. Maximum long-term deflection shall be 5%.
11. The installed, cured thickness shall be the largest thickness as calculated for deflection, bending, buckling, minimum stiffness and a 50 year design life.

The Minimum Acceptable Pipe Thickness **(Finished and Installed)**, shall be based on design parameters in section 2.07, Items (1) through (11) of this Specification adjusted for site-specific field conditions and approved by the Purchaser prior to tube manufacture.

B. It is the Subcontractor's responsibility to determine the site specific external loads on the liner and increase or decrease its thickness as required. In the event actual field conditions allow for a deviation in the above thickness table, the Subcontractor shall submit any proposed changes to the Purchaser for approval to ensure installed CIPP meets minimum thickness requirements. The plan shall include detailed inversion procedures to reduce stretching and resin loss and to minimize shrinkage.

C. The Subcontractor shall submit his price proposal based on the appropriate length, size, and existing pipe parameters. The deterioration of sewers is an on-going process. In the event pre-construction inspections reveal the sewers to be in substantially different conditions than those in the design considerations, the Subcontractor shall request such changes in reconstruction liner thickness, supporting such requests with the appropriate design data satisfactory to the Purchaser. The deviation, if approved, shall be reflected by the appropriate addition or reduction in the unit cost for that size as agreed to by the Purchaser.

D. Any liner that does not meet the specified strength and/or thickness requirements, regardless of the amount below the specified requirements, shall be corrected by the Subcontractor in a manner approved by the Purchaser at no additional cost to the CITY. The PURCHASER's decision on how to correct deficient CIPP installations shall be final. Options for correcting deficient liners that will be considered by the PURCHASER include removing the liner and re-lining the sewer, excavating and replacing the sewer from manhole to manhole, or providing the PURCHASER with a substantial credit. The primary option that will be considered will be to re-line the sewer. Credits will only be authorized for CIPP that does not meet required thickness. If a credit is acceptable to the PURCHASER, the credit shall be calculated by multiplying the bid price by the percent that the liner thickness is below the required installed thickness as follows:

Credit = (1 – Installed CIPP thickness/required CIPP thickness) x bid price

E. The Subcontractor shall not assume a credit will be acceptable to the PURCHASER in any case.

F. The finished CIPP will provide a uniform smooth, interior wall surface and will have at least 100% of the flow capacity of the original pipe before rehabilitation.

PART 3 - EXECUTION

3.01 INSTALLATION

A. General

1. All reconstruction of existing gravity sewer mains using an approved CIPP Product and Installer shall be performed in accordance with the latest revision of ASTM F1216.

2. The Subcontractor shall carry out his operations in strict accordance with all applicable OSHA standards. Particular attention is drawn to those safety requirements involving work on an elevated platform and entry into a confined space.

3. All surfaces, which have been damaged by the Subcontractor's operations, shall be restored to a condition at least equal to that in which they were found immediately prior to the beginning of the Subcontractor's operations. Suitable materials and methods shall be used for such restoration. The restoration of existing property or structures shall be done as promptly as practicable and shall not be left until the end of the construction period. Compensation for this work will be included in the rehabilitation item to which it pertains.

B. Installation Procedures

1. Cleaning and Inspections – Sewers shall be cleaned of all debris, roots and other materials that would block proper inversion of the cured-in-place pipe. Inspection of the sewer pipe shall be performed by the Subcontractor's experienced personnel trained in location breaks and obstacles by CCTV inspection and certified under National Association of Sewer Service Companies (NASSCO) Pipeline Assessment Certification Program (PACP®). Utilizing a color video inspection system with data recording capabilities, the entire pipe section to be lined shall be inspected in accordance with the CCTV specifications. The interior of the pipe shall be carefully inspected to determine the location of any conditions, which may prevent the proper installation of the CIPP, and it shall be noted so that these conditions can be corrected. The video inspection shall be performed in the presence of the Purchaser's Resident Project Representative. The DVD/CD-ROM and suitable log shall be submitted to the CITY with database and reports in a PACP compliant format to be incorporated into the Purchaser's computer management system and GIS.

2. Sewer service connections shall also be CCTV inspected, which shall identify all service connections, openings, and condition of service connections to main.

3. Utilizing high-pressure jet cleaning equipment, several passes are completed to assure that all debris is removed from the pipe. If roots are present, root cutters or mechanical brushes are attached to the jet nozzle and sent through the line to remove all root intrusions. Should equipment other than that described above be needed to remove debris or heavy roots, additional payment may be authorized by the PURCHASER.

4. Heavy Cleaning of Sewers – If roots are present which require the use of

mechanical brushes or dragging devices or, if in the judgment of the PURCHASER, the pipe is more than 25% full of debris, the pipe shall be cleaned to the satisfaction of the PURCHASER and additional payment authorized under the appropriate Pay Item on the bid form. Heavy Cleaning shall be defined as the pipe being more than 25% full of debris or requiring the use of apparatus other than normal high-pressure jetting equipment. The Subcontractor shall be paid for heavy cleaning at the contract unit price shown on the bid form. Any heavy cleaning shall be supported by visual evidence in the form of video or digital image and must be pre-approved by the PURCHASER.

5. The Subcontractor shall be responsible for determination of active services. No payment shall be made for reinstatement of inactive services unless approved by the Owner. Damages or fines resulting from failure to renew any active service(s) shall be Subcontractor's responsibility. If the Subcontractor reinstates an inactive service that is not approved, the Subcontractor shall make a point repair by excavation or shall apply an approved internal patch to repair the cut-in hole. The Subcontractor shall make the necessary repairs at no cost to the Owner.

6. Bypass of Flow – As required for acceptable completion of the work and/or to avoid damages due to sewer spills or overflows, the Subcontractor shall provide for sewer flow maintenance around the section or sections of pipe designated for rehabilitation. The bypass shall typically be made by plugging the line at an existing upstream manhole and pumping the flow into a downstream manhole or adjacent sanitary sewer system. The pump and bypass lines shall be of adequate capacity and size to handle the anticipated flow. Bypassing of sanitary sewerage into the storm water system will not be allowed. For all bypass pumping, pump noise shall be kept to a minimum to the satisfaction of the CITY. The Subcontractor shall be required to contact all residential and commercial customers whose service lines connect to the sewer main being bypassed and inform them that they will be temporarily out of service. The Subcontractor shall also advise those customers against water usage until the mainline is back in service. After completing the necessary work on the main line to allow its reuse, the Subcontractor shall advise those customers that the sewer main is back in service.

7. If the CIPP lining manufacturer believes the infiltration rate in the sewer segment is high enough to risk washing out the resin, the Subcontractor shall perform required measures to minimize infiltration prior to installation. If any infiltration runners or gushers are observed during the pre-CCTV inspection, the Subcontractor shall submit, in writing for approval by the Construction Manager, the methods and materials for mitigating any adverse impacts from the infiltration.

8. Resin Impregnation of the CIPP Tube – The Subcontractor shall designate a location where the tube shall be impregnated or "wet out" with resin, using distribution rollers and a "single-source" or "serial" vacuum system to thoroughly saturate the tube's felt fiber prior to installation in the field. The impregnated tube shall be free of pinholes, resin voids and other defects and sufficient excess resin shall be provided to allow for resin migration into the host pipe. If the cured-in-place pipe is impregnated at the manufacturing plant, it shall be delivered to the job site packed in ice in a refrigerated truck, and remain refrigerated prior to

installation to prevent premature curing. If an “over the hole” or remote wet out is proposed, installation and wet out procedures shall be submitted in detail and must be approved by PURCHASER prior to installation.

9. Inversion of CIPP Liner Tube – Installation shall be carried out in accordance with this Specification only. The impregnated tube shall be water inverted through an existing manhole or other approved access point utilizing a hydrostatic water column or pressurized steam until it has fully traversed the designated line length and the inversion face breaches the destination manhole or termination point. The fluid column or air pressure shall have been adjusted and maintained to be sufficient to cause the impregnated tube to hold tight against the existing pipe wall, produce dimples at side connections, and flared ends at the manholes. Lubricant during inversion shall be used as necessary in accordance with the CIPP manufacturer’s recommendations. Thermocouples shall be placed at the top and bottom interface of both ends of the liner for monitoring temperature during the cure cycle. Temperature monitoring systems shall be Zia systems or Vericure by Pipeline Renewal Technologies. Care should be taken during tube installation not to over-stress the fabric fiber.

   a. The CIPP lining for 6-inch through 18-inch sewers without sags greater than 30% may be installed via inversion using hydrostatic head or air pressure or pull-in methods in accordance with ASTM F1216 and manufacturer’s recommendations.
   b. The CIPP lining for greater than 18-inch sewers or with sags greater than 30% (depth of water in the pipe) shall be installed via inversion using hydrostatic head in accordance with ASTM F1216 and manufacturer’s recommendations.

10. When using pressurized air, particular attention should be given to the maintenance of the minimum required “finished and installed” thickness of the CIPP. Before the inversion begins, the tube manufacturer shall provide the minimum air pressure required to hold the tube tight against the host pipe and the maximum allowable pressure so as not to damage the tube. Once the inversion has started, pressure shall be maintained between the minimum and maximum pressures until the inversion has been accomplished.

11. <u>The preferred method of installation for CIPP shall be inversion using a hydrostatic head (water column).</u> The use of pressurized air will be considered on a case-by-case basis only. The Subcontractor shall submit a written request for the use of pressurized air in sewer segments where the Subcontractor feels that the utilization of pressurized air will be beneficial to the PURCHASER. The Subcontractor shall not assume in any case that the use of pressurized air is acceptable to the PURCHASER without prior written authorization from the PURCHASER.

12. After mainline lining is completed and the laterals have been recently renewed, install watertight lateral-mainline interface seal and extend minimum of 18 inches into lateral to create water tight seal ensuring interface is smooth and does not impede flow from lateral.
   a. Approved for lateral lining seal.
      i. LMK Enterprises

1. 2-piece Hydrophilic, Full circle Structural Connection Seal

ii. BLD Services

b. Approved for Interface Injection Seal.

i. Janssen Process Company.

ii. ProKasro Interface Injection

13. Perform manufacturer's required and industry standard preparation work to alleviate lateral-mainline interface seal problems and as specified herein.

a. As necessary for access of equipment, contour manhole bench and channel by saw cutting.

b. Internally remove any obstructions, roots, debris, or grease that impact lateral-mainline interface seal

c. Remove tuberculation on ductile iron lateral.

d. Do not back-up or blow-back waste into property owners' building.

e. Perform pre-lining leakage control by chemical grout method to eliminate cold spots.

i. Chemical grouting not required for Janssen resin seal method.

f. Lateral, mainline, or property damaged as result of improper use of equipment: Repaired at no cost to the Commission.

14. Setup bypass pumping, if necessary, or turn off water to building with Engineer's approval.

3.02 CURING

A. *Initial cure* will occur during temperature heat-up and is completed when exposed portions of the new pipe appear to be hard and sound and the thermocouples indicate that the temperature is of a magnitude to realize an exothermic reaction or cure in the resin. After initial cure is reached, the temperature shall be raised to the post-cure temperature recommended by the resin manufacturer. Post-Cure temperature shall be held for a period as recommended by the resin manufacturer, during which time the recirculation of the water and cycling of the heat source to maintain the temperature continues.

Prior to any inversion, the Subcontractor shall provide a *Post-Cure Hold Time and Temperature Table*. This table shall indicate the minimum time and temperature the inverted tube will be held at in order to achieve desired physical properties. The resin manufacturer shall certify both the time and temperatures presented in the table.

Curing must take into account the existing pipe material, the resin system, and the ground conditions (temperature, moisture level, and thermal conductivity of the soil).

1. Using Circulated Heated Water

a. A suitable heat source and water recirculation equipment is required to circulate heated water throughout the pipe. The equipment shall be capable of delivering hot water throughout the inverted tube to uniformly raise the temperature required to cause a cure of the resin.

2. Using Controlled Steam

a. Suitable steam-generating equipment is required to distribute steam throughout the pipe. The equipment shall be capable of delivering steam throughout the inverted tube to uniformly raise the temperature required to cause a cure of the resin.

b. The Time and Temperature Table submitted when using steam curing shall be identical to time and temperature hold times when curing with heated, circulated water.

B. The preferred method of curing CIPP shall be by circulated water. The use of controlled steam will be considered on a case-by-case basis only. The Subcontractor shall submit a written request for the use of steam in sewer segments where the Subcontractor feels that curing by steam will be beneficial to the finished product. The Subcontractor shall not assume in any case that the use of controlled steam for the curing of CIPP is acceptable to the Purchaser without prior written authorization from the Purchaser.

3.03 POST CURING

A. CIPP Processing (Curing and Cool Down) - The cure cycle and cool down will be dictated with consideration given to actual field conditions and shall be according to the manufacturer's recommendations. The curing temperatures shall be monitored at the heater truck's water inlet and outlet lines. The temperature readings from the truck will be compared to the thermocouples to insure that sufficient heat is being supplied to the system to affect proper cure. Once the pipe has been cured, cool water shall be slowly introduced into the rehabilitated pipe. The water temperature shall be cooled inside of the pipe at a rate of 20 to 30 degrees per hour until the water temperature is within 20 degrees of the ambient temperature. The cool down process will also be affected by actual field conditions and may be modified in cases of severe conditions or below normal ground temperatures.

B. Temperature monitoring systems shall be required for all 18-inch or larger sewers, any sized sewer that crosses a stream, creek, or other body of water, or as noted on the Drawings. This system shall be installed at the pipe invert per the manufacturer's recommended procedures. The temperature sensors shall be placed at intervals as recommended by the sensor manufacturer. Additional sensors shall be placed where significant heat sinks are likely or anticipated. The sensors, if installed, shall be monitored by a computer using a tamper-proof database which can record temperatures at the lining interface and the host pipe. Temperature monitoring systems shall be Zia systems or Vericure by Pipeline Renewal Technologies..

C. Termination and Sealing at Manhole Outlets – The Subcontractor shall install a hydrophilic seal at each manhole face prior to inverting or pulling in the uncured CIPP lining. These seals should be per Hydrotite by Greenstreak, Insignia by LMK, or an approved equal.

All CIPP lining cutting and sealing at manhole connections shall provide watertight pipe and manhole seals. All cured lining cut edges shall be thoroughly sealed with the same resin as used in the lining. The catalyst or hardener used shall be compatible with the resin/catalyst previously used in the lining, but shall not require an external heat source to begin the exothermic reaction (curing).

D. Testing - testing of finished CIPP and leakage testing of the finished CIPP-lined sewer mains shall be conducted prior to the reinstatement of laterals in the presence of the Purchaser, and shall follow Part 4 of these specifications.

E. Internal Reconnection of Lateral Services - For each inversion run after the CIPP has been cured in place and leakage testing results of the finished CIPP are deemed acceptable by the Purchaser, the Subcontractor shall reopen the existing active sanitary sewer connections for each inversion run. This shall be done without excavation from the interior of the pipeline by means of a television camera and a cutting device that re-establishes the sanitary sewer connections to not less than 95% of their original size and render them fully functional. Restored openings shall be neatly and smoothly cut and without rough edges. Care must be exercised not to damage the CIPP or the existing main or lateral pipes. Holes cut outside the lateral opening or oversized cutting (more than 100%) must be corrected at the Subcontractor's expense.

3.04 CLEAN UP

A. Upon acceptance of any installation by the Purchaser, the Subcontractor shall reinstate the project area affected by his operations to a condition at least equal to that existing prior to the work. The Subcontractor shall flush and clean each newly lined section, if necessary, to remove all accumulated debris, rocks, gravel, sand, silt and other foreign material from the system at or near the closest downstream manhole. Debris shall not be allowed to pass downstream. If it does, the Subcontractor shall clean the next segment at no additional cost.

3.05 BYPASS PUMPING

A. The Subcontractor must provide bypass pumping as required by conditions. Bypass pumping will be included in the per-foot price for all sewer lines included in the bid. The Subcontractor may choose to use multiple parallel pipes to accommodate the bypass in lieu of a single pipe.

B. All bypass pump and piping schemes must be submitted to and approved by the Purchaser and CITY in advance.

C. Bypass pumping is defined as providing pumps, standby pumps, piping, manpower to operate, routine maintenance and repair capability, pipe plugs, fuel, route and pump site clearing and whatever else is necessary to provide a complete bypass pumping operation. The bypass shall typically be made by plugging the line at an existing upstream manhole and pumping the flow into a downstream manhole. The pump and bypass lines shall be of adequate capacity and size to handle the anticipated flow. The Subcontractor will be required to attenuate noise associated with bypass pumping so that the general public is not disturbed by the sound level. Any structures proposed by the Subcontractor for construction over or penetration into the interceptor piping for the purpose of performing the bypass operations must be approved by the Purchaser and City prior to implementation. This approval will be based upon the submittal by Subcontractor of Tennessee professional engineer prepared design drawings and details.

3.06 PERMANENT SERVICE LATERAL RENEWAL

A. When specified or shown on the Drawings, permanent service lateral renewals (replacement) shall be made using epoxied-on PVC saddle with a gasketed lead and skirt as manufactured by GPK Products, Inc., DFW/HPI Flex Saddle T Version, or approved equal. Two stainless steel bands shall be used to attach the saddle to the CIPP.

1. Service laterals shall be replaced from the main sewer line to the right-of-way or property line of the sewer customer. A cleanout shall be installed at the property line.
2. Installation of service laterals, including fittings and cleanouts, by excavating and backfilling shall be accomplished using 6-inch SDR 35 PVC pipe conforming to ASTM D3034. Joints shall be integral bell and spigot type joints conforming to ASTM D-3139. Gaskets shall conform to ASTM F477. Pipe markings shall conform to ASTM D1785, including manufacturer's name or trademark, pipe size, PVC cell classification (12454 B), Schedule 40 PVC sewer pipe, and designation ASTM D1785.
3. Flexible couplings manufactured by Fernco, Inc. or approved equal shall be used to connect the service lateral to the service piping and to connect the new service piping to the existing service piping. All restraining bands shall be stainless steel.
4. Construction of the service reconnection shall terminate at the property line with the installation of a cleanout assembly.

PART 4 - FIELD QUALITY CONTROL

4.01 SAMPLE PREPARATION AND TESTING OF CURED CIPP

Sample preparation, sample testing, and leakage testing of the finished CIPP-lined sewer mains shall be performed in accordance with this specification. The Subcontractor shall furnish all equipment and personnel necessary to conduct these preparations and tests.

A. The Subcontractor shall prepare CIPP samples for each inversion according to this Specification and ASTM F-1216. The Purchaser may, at its discretion, submit samples of the cured CIPP for laboratory determination of flexural strength, flexural modulus and wall thickness for each test sample during the execution of this Contract. These three individual analyses shall comprise one completed test. All samples shall be collected per the sampling protocols set forth in ASTM F-1216.

The PURCHASER will determine the number and location of samples to be analyzed by the independent testing laboratory.

1. A minimum of 2 samples shall be taken of the first segment installed.
2. A sample shall be taken for each liner inversion on the project. Multiple segment inversions from one manufacturing lot, require 1 sample unless in excess of 1,200-feet for which 2 must be taken.
3. A minimum of 6 samples per project shall be taken for each type of liner furnished.
4. Tests in accordance with ASTM standards for Tensile Properties,

Flexural Modulus and wall thickness shall be conducted.

5. The Subcontractor shall determine sampling location and procedures to ensure representative samples are obtained from the finished liner, subject to approval by the Purchaser.
6. The Subcontractor shall furnish removable sizing sleeves to collect liner samples, which accurately replicate the host pipe diameter.
7. Plate samples may be provided for sewer larger than 15 inches in diameter.

B. The Subcontractor shall prepare one restrained sample of the installed liner at least 12 inches in length for testing. For sewers 15 inches and larger, plate samples may be taken and cured in the same manner as the installed CIPP. For each sample taken, the Subcontractor shall cut and deliver a 1-inch wide representative sample (taken at least 2 inches from the end of the specimen) to the Purchaser. The sample delivered to the Purchaser shall be labeled and removed from any restraining mold. The Purchaser may return such samples to the Subcontractor for disposal.

C. The tests shall be used to verify that the installed CIPP meets these specifications. CIPP thickness shall be measured in accordance with ASTM D5813. Flexural properties shall be determined per ASTM D790. The Subcontractor shall label and date all samples and deliver the samples directly to the Purchaser. All testing shall be performed by an independent, ASTM-certified testing laboratory of the PURCHASER's designation and at the Purchaser's expense. Payment to the Subcontractor shall be withheld pending the Purchaser's acceptance of the CIPP test results.

D. Any liner that does not meet the specified strength and/or thickness requirements, regardless of the amount below the specified requirements, shall be corrected by the Subcontractor in a manner approved by the Purchaser at no additional cost to the Purchaser. The Purchaser's decision on how to correct deficient CIPP installations shall be final.

4.02 LEAKAGE TESTING OF CIPP SEWER MAINS

Leakage testing of all finished CIPP-lined sewer mains shall be conducted prior to the reinstatement of laterals in the presence of the Purchaser and CITY in accordance with the exfiltration test method for gravity pipes described in the latest revision of ASTM F1216 unless revised herein. The Subcontractor shall furnish all equipment and personnel necessary to conduct all of the leakage tests.

After cured-in-place installation, perform a test on the sewer line to determine if it is watertight. This shall be done after all services are reinstated. Subcontractor shall test the line from manhole to manhole by plugging each cleanout assembly.

A. Furnish all necessary equipment to conduct the test.
B. Low-pressure air test:
   A. Pressurize the test section to 4.0 PSI and hold above 3.5 PSI for not less than 2 minutes. Add air if necessary to keep the pressure above 3.5 PSI. At the end of this 2-minute stabilization period, note the pressure (must be 3.5 PSI minimum) and begin the timed period. If the pressure drops 0.5 PSI in less than the time given in the table below, the section of pipe shall have failed the test.

Sewer Size (Inches)	Minimum Test Time/100 ft. (Seconds)

Sewer Size (Inches)	Minimum Test Time/100 ft. (Seconds)
8	72
10	90
12	108
15	126
18	144
21	180
24	216
27	252
30	288

B. When the prevailing groundwater is above the sewer being tested, test pressure shall be increased 0.43 PSI for each foot that the water table is above the invert of the sewer.

C. If the time for the pressure to drop 0.5 PSI is 125 percent or less of the time given in the table, the line shall immediately be re-pressurized to 3.5 PSI and the test repeated.

D. Services reinstated before air test shall be considered part of the pipe to which they are connected and no adjustment of test time shall be allowed.

The pressure gage used shall be supplied by the Subcontractor and have minimum divisions of 0.10 PSI and be oil filled.

4.03 EXFILTRATION TESTING OF CIPP SEWER MAINS (DELETED)

4.04 FINAL VIDEO INSPECTION

A. CCTV in accordance with Section 00003 shall be submitted after liner installation. This inspection shall be performed, one section at a time, by a color video inspection system. The finished CIPP shall be continuous over the entire length of all inversion runs and be free of dry spots, wrinkles, pinholes, holidays, lifts, and delaminations. The camera's rate of travel shall not exceed 20 feet per minute. The footage meter count shall be clearly visible. Logs shall include date, line size, length, manhole numbers and project number, direction of camera travel, direction of flow, and any observed defects or comments. Videos between manhole segments shall be continuous; no breaks or "blink-outs" in the video shall be observed. No infiltration of groundwater shall be observed. All service entrances shall be accounted for and shall be unobstructed including all rehabilitated service lateral connection repair(s). If, in the judgment of the Purchaser, any unsatisfactory conditions are present, the Subcontractor shall correct conditions in these areas at no additional cost to the Purchaser.

PART 5 - SUBCONTRACTOR RESPONSIBILITIES

5.01 PROTECTION OF DOWNSTREAM FACILITIES

The Subcontractor must take all steps necessary to assure that no material is allowed to fall into the line during his installation process. The Subcontractor shall bear all cost of repairs resulting from any damages to downstream facilities resulting from failure to abide by this stipulation.

5.02 WASTEWATER SPILLS

A. Should the Subcontractor spill any wastewater, such that the sewage either immediately

or ultimately enters the waters of the State of Tennessee, then the Subcontractor will be completely responsible for any fines or penalties imposed on the Purchaser, the CITY or the Subcontractor by the USEPA or the State of Tennessee.

B. Public advisory services will be required to notify all parties whose service laterals will be out of service and to advise against water usage until the mainline is back in service.

C. The Subcontractor will be required to provide businesses with temporary service, as needed, and will be responsible for all necessary bypass pumping flows.

5.03 WATER

The Subcontractor will be required to Contact Memphis Light, Gas, & Water (MLGW) located at 3941 Grandview Avenue (telephone: 901-320-3910) in order to acquire a water meter for the lining process. Any water costs associated with the lining process will be considered incidental to the contract and not a separate pay item. Water for all construction operations shall be available from identified MLGW fire hydrants at normal commercial rates. Water usage shall be in accordance with MLGW's backflow and metering policies.

5.04 SAFETY

A. The Subcontractor shall carry out his operations in strict accordance with all applicable OSHA standards. Particular attention is drawn to those safety requirements involving work on an elevated platform and entry into a confined space.

B. The Subcontractor will be responsible for locating and accessing all manholes, or other structures associated with the pipe system to be lined. The Purchaser and CITY will provide personnel to guide the Subcontractor to the locations but will not provide additional access

5.05 SITE RESTORATION

A. The Subcontractor shall restore or replace all removed or damaged paving, curbing, sidewalks, gutters, shrubbery, fences, sod or other disturbed surfaces or structures to a condition equal to that before the work began, to the satisfaction of the Purchaser, and shall furnish all labor and material incidental thereto.

B. The restoration of existing property or structures shall be done as promptly as practicable and shall not be left until the end of the contract period. Compensation for this work will be included in the rehabilitation item to which it pertains.

5.06 PUBLIC NOTIFICATION

A. Public

Prior to conducting CIPP field work, the Subcontractor shall provide notification to every residence and business that may be affected. The Subcontractor shall distribute the Purchaser approved door hangers between 48 and 72 hours prior to the start of the CIPP effort. Door hangers shall be double-sided with the notification information in the English language on one side and in the Spanish language on the reverse side. The local fire department shall be notified of the smoke testing at least seven days in advance.

At a minimum, the notifications shall advise residents of what to expect during the lining process, and the Subcontractor shall notify utility customers 48 hours in advance of

disconnecting sewer services if the service will be offline for more than eight (8) hours.

Door hanger notifications shall use a fluorescent color for visibility and incorporate any City-specific mascot or logo (if available and agreed upon by the Purchaser) to link the CIPP work to the City's sewer improvement effort.

B. Purchaser

The Subcontractor shall provide daily morning updates prior to beginning daily field operations to the Purchaser, fire, police, or other agencies as directed by the Purchaser. List of entities and individuals requiring notification will be distributed prior to work commencing.

5.07 WARRANTY

The warranty period shall be for a period of five (5) years from the installation date of the tube. Any defects, which in the opinion of the Purchaser, will affect the integrity or strength of the pipe shall be repaired at the Subcontractor's expense in a manner acceptable to the Purchaser. The material shall be unconditionally guaranteed to meet or exceed the design criteria detailed in this Specification.

PART 6 – MEASUREMENT

6.01 CURED-IN-PLACE-PIPE

Cured-In-Place-Pipe will be measured by the linear foot as measured by the final inspection video. The line lengths and quantities shown on the Bid Form are to provide a value for cost extension purposes and are approximate. The Subcontractor will be paid for actual quantities installed in the field. Documented lengths shall be the distance from the upstream inside face of manhole to the downstream inside face of manhole or similar structure. All lengths will be verified by the Purchaser. Diameters will be based on the original as-constructed nominal pipe diameter. Light Cleaning is to be included in the individual line bids.

6.02 LATERAL REINSTATEMENT

Services reinstated using a robotic cutter shall be measured per each reinstated service (See "LATERAL REINSTATEMENT" on Bid Form). Services which must be reinstated by conventional methods (excavation) shall be reinstated by CITY forces at no cost to the Subcontractor or by a Second Tier Subcontractor retained by the Subcontractor and approved by the CITY on a cost plus 15 percent basis.

Any point repairs deemed necessary by the Subcontractor and approved by the CITY shall be done by CITY forces at no cost to the Subcontractor or by a second tier subcontractor retained by the Subcontractor and approved by the CITY on a cost plus 15 percent basis.

6.03 CUT INTRUDING TAP

Services cutting an intruding laterals shall be measure per each.

6.04 TRAFFIC CONTROL
Traffic control will be paid for each CIPP reach.

PART 7 – PAYMENT

7.01 CURED-IN-PLACE-PIPE
The accepted quantities of CIPP will be paid for at the contract extended unit price per linear foot, based upon the verified liner diameter and thickness. The price paid per linear foot for pipe lining shall include full compensation for furnishing labor, materials, tools, equipment, and incidentals necessary to furnish, install, and test the CIPP lining, plus sewage bypassing, water control, service lateral reinstatement, manhole connections, preconstruction inspection, cleaning, sewer cleaning materials disposal, final inspection, post-construction inspection, protecting existing utilities and adjacent property, and all required surface restoration work, complete in place, as shown on the Drawings and specified herein.

7.02 LATERAL REINSTATEMENT
The accepted quantities of Lateral Reinstatement will be paid for at the contract unit price per each. This price will be full compensation for all material, labor and equipment.

7.03 CUT INTRUDING TAP
The accepted quantities for cutting the intruding tap will be paid for at the contract unit price per each. This will be full compensation for all material, labor, and equipment.

7.04 TRAFFIC CONTROL
Traffic Control will be paid per each CIPP reach including all appurtenances required to comply with MUTCD Standards.

7.05 PAYMENT WILL BE MADE UNDER:

Item No.	Pay Item	Pay Unit
09910-7.01.01	CIPP 18” Diameter (0-10’ depth)	Linear Foot
09910-7.01.02	CIPP 18” Diameter (10.1-20’ depth)	Linear Foot
09910-7.01.03	CIPP 20” Diameter (0-10’ depth)	Linear Foot
09910-7.01.04	CIPP 20” Diameter (10.1-20’ depth)	Linear Foot
09910-7.01.05	CIPP 24” Diameter (0-10’ depth)	Linear Foot
09910-7.01.06	CIPP 24” Diameter (10.1-20’ depth)	Linear Foot
09910-7.01.07	CIPP 27” Diameter (0-10’ depth)	Linear Foot
09910-7.01.08	CIPP 27” Diameter (10.1-20’ depth)	Linear Foot
09910-7.01.09	CIPP 36” Diameter (0-10’ depth)	Linear Foot
09910-7.01.10	CIPP 36” Diameter (10.1-20’ depth)	Linear Foot
09910-7.02	Lateral Reinstatement	Each
09910-7.03	Cut Intruding Tap	Each
09910-7.04	Permanent Service Lateral Renewal	Each
09910-7.05	Traffic Control	Lump Sum

END OF SECTION 9910

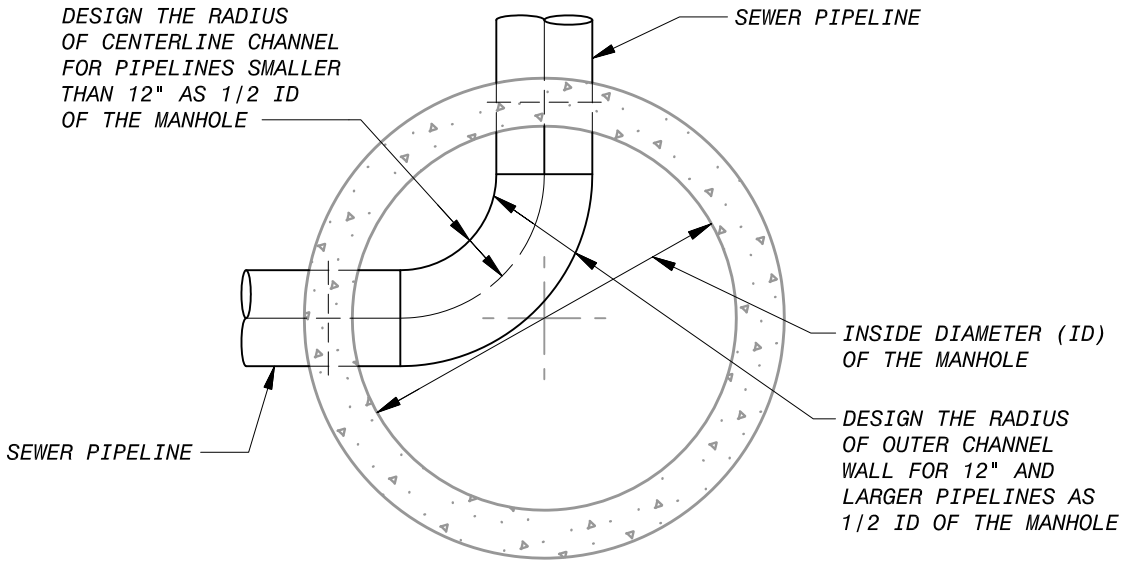

MINIMUM RADIUS OF MANHOLE CHANNEL

EXAMPLE: FOR A 48-INCH DIAMETER MANHOLE FOR 8-INCH SEWERS, MINIMUM CENTERLINE CHANNEL RADIUS EQUALS TWO (2) FEET

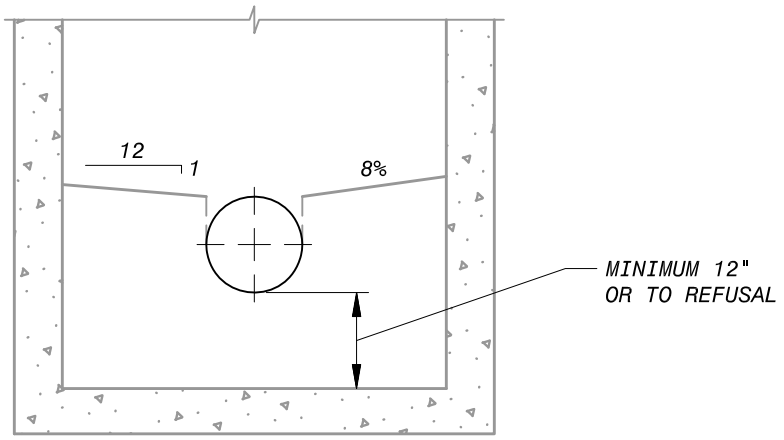

NOTES:

1. CHANNEL SHALL BE POURED WITH 3,000 PSI CONCRETE.
2. INSTALL HYDROPHILIC NEOPRENE GASKET AROUND PERIMETER OF MANHOLE, 2 INCHES TO 4 INCHES BELOW FINAL CONCRETE ELEVATION (E.G. LMK INSIGNIA END SEAL SLEEVE).
3. INVERT OF NEW MANHOLE CHANNEL SHALL BE FINISHED WITH CONSISTENT SLOPING GRADE FROM INCOMING PIPELINE INVERT TO OUTGOING PIPELINE INVERT, IF APPLICABLE WITH EXISTING INVERT ELEVATIONS.
4. RADIUS OF CHANNEL:
   - A. FOR SEWER PIPELINES SMALLER THAN 12-INCH DIAMETER, PROVIDED A MINIMUM RADIUS OF THE CENTERLINE OF THE CHANNEL OF ONE-HALF (1/2) THE INSIDE DIAMETER (ID) OF THE MANHOLE.
   - B. FOR SEWER PIPELINES 12-INCH AND LARGER, PROVIDE A MINIMUM RADIUS OF THE OUTER CHANNEL WALL OF ONE-HALF (1/2) THE INSIDE DIAMETER (ID) OF THE MANHOLE.
   - C. DESIGN THE CHANNELS TO HAVE A UNIFORM CURVE, WITH NO REVERSE CURVES WITHIN THE MANHOLE.
5. WIDTH OF CHANNEL:
   - A. THE CHANNEL WIDTH FOR SEWER PIPELINES HAVING THE SAME DIAMETER ENTER AND EXIT A MANHOLE IS THE SAME AS THE PIPE INSIDE DIAMETER.
   - B. THE CHANNEL WIDTH FOR SEWER PIPELINES HAVING DIFFERENT DIAMETER, IS TAPERED FROM ONE PIPE SIZE TO THE OTHER.
6. TOP OF BENCH ELEVATION:
   - A. WHEN BOTH THE INCOMING AND OUTGOING PIPES ARE THE SAME DIAMETER, SET THE TOP OF THE BENCH AT THE SAME ELEVATION AS THE TOP OF THE PIPE.
   - B. WHEN THE INCOMING AND OUTGOING OF THE PIPES HAVE DIFFERENT DIAMETERS, SET THE TOP OF PIPE ELEVATION OF THE HIGHEST PIPE WITHIN THE MANHOLE, EXCEPT WHEN A MANHOLE DROP CONNECTION IS DESIGNED. WHEN A SEWER HOUSE CONNECTION (SHC) ENTERING THE MANHOLE IS SIGNIFICANTLY HIGHER THAN THE MAINLINE SEWER, THE BENCH ON THE SIDE WHERE THE SHC ENTERS MAY BE ELEVATED, AND THE BENCH ON THE OPPOSITE SIDE MAY MATCH THE TOP OF THE MAINLINE SEWER FOR MORE CONVENIENT ACCESS.
7. WIDTH AND SLOPE OF THE TOP OF THE BENCH:
   - A. THE BENCH SHOULD PROVIDE GOOD FOOTING FOR A WORKER AND A PLACE WHERE TOOLS AND EQUIPMENT CAN BE LAID AND MUST BE PROVIDED WITH ADEQUATE SLOPE TO DRAIN.
     1. INSTALL THE TOP OF BENCH WITH AN EIGHT (8%) PERCENT OR 1-INCH PER FOOT SLOPE FROM THE WALL TO THE CHANNEL'S EDGE.
     2. INSTALL THE WIDTH OF THE BENCH TO HAVE A MINIMUM OF 12-INCH ON EACH SIDE OF THE CHANNEL, IF POSSIBLE.

MEMPHIS SEWER ASSESSMENT & REHABILITATION PROGRAM — SARP 10

BLACK & VEATCH Building a world of difference.

SARP10

BENCH & CHANNEL REPLACEMENT DETAIL

SCALE: NOT TO SCALE

REV 0.0

DATE: 06/17/15