**ROOF MOUNTED SOLAR PHOTOVOLTAIC PANELS**

# Table of Contents

**Page**

**1.0 SCOPE** ..... 3
1.1 Changes ..... 3
**2.0 RECOMMENDATIONS** ..... 3
2.1 Construction and Location ..... 3
2.1.1 Wind ..... 3
2.1.2. Fire Exposure and Classification ..... 5
2.1.3 Gravity Loads and Roof Drainage ..... 5
2.1.4 Hail ..... 6
2.1.5 Earthquake ..... 6
2.2 Operation and Maintenance ..... 6
2.3 Electrical ..... 7
**3.0 SUPPORT FOR RECOMMENDATIONS** ..... 9
3.1 Basic Operation of PV Systems ..... 9
3.2 Wind Resistance ..... 10
3.2.1 Boundary Layer Wind Tunnel (BLWT) Testing and Ballasted PV Systems ..... 10
3.2.2 PV Systems Fastened to Standing Seam Roofs (SSR) ..... 13
3.3 Fires and Electrical Ignition Sources ..... 14
3.3.1 Ground Fault Protection ..... 14
3.3.2 Preventing Fires from DC Ground Fault in PV Arrays ..... 14
3.4 Exterior Fire Spread in Roof-Mounted PV Arrays ..... 15
3.5 Gravity Loads and Roof Drainage ..... 16
3.6 Hail Resistance ..... 17
3.7 Flexible PV Installations ..... 17
**4.0 REFERENCES** ..... 17
4.1 FM Global ..... 17
4.2 Other ..... 17
4.3 Bibliography ..... 18
**APPENDIX A GLOSSARY OF TERMS** ..... 18
**APPENDIX B DOCUMENT REVISION HISTORY** ..... 19

## List of Figures

Fig. 1. Wind deflectors provided on the high sides of panels in each row (closed array) ..... 4
Figs. 2A and 2B. Examples of mechanical anchors used to secure equipment to the roof deck or roof framing ..... 5
Fig. 3. Residual current measurements with auxiliary trip (CB = combiner box, RCD = residual current disconnect, GFDI = ground fault detection and interruption) ..... 7
Fig. 4. Electronic current sensing relay in ground circuit ..... 8
Fig. 5. One-line example diagram of remote-operated DC disconnect for grounded PV system (the negative pole is grounded at the inverter in this example) ..... 8
Fig. 6. One-line example diagram of remote-operated DC disconnect for ungrounded PV system ..... 9
Fig. 7. Mechanically fastened roof cover billowing when subjected to wind pressure ..... 11
Fig. 8. Solar panels with steeper slopes or lacking wind deflectors will experience greater wind effects . 12
Fig. 9. Equipment lacking anchorage to roof framing ..... 12
Fig. 10. Solar panels secured to standing seam roofs using external seam clamps ..... 13
Fig. 11. Unacceptable arrangement: clamp missing from SSR rib below middle of outer panel edge ..... 14

©2014 Factory Mutual Insurance Company. All rights reserved. No part of this document may be reproduced, stored in a retrieval system, or transmitted, in whole or in part, in any form or by any means, electronic, mechanical, photocopying, recording, or otherwise, without written permission of Factory Mutual Insurance Company.

Fig. 12A. One-line example diagram to a PV system with ground faults ..... 15
Fig. 12B. One-line example diagram to a PV system with ground faults ..... 16
Fig. 12C. One-line example diagram to a PV system with ground faults ..... 16

## List of Tables

Table 1. Minimum Values of Insulation Resistance ..... 6

©2014 Factory Mutual Insurance Company. All rights reserved.

## 1.0 SCOPE

This data sheet provides property loss prevention guidance related to fire and natural hazards for the design, installation, and maintenance of all roof mounted photovoltaic (PV) solar panels used to generate electrical power. This document does not address solar towers, roof-mounted solar-powered water heaters, or ground-mounted solar farms. For guidance on ground-mounted solar farms, see Data Sheet 7-106, *Ground-Mounted Photovoltaic Solar Power.*

### 1.1 Changes

October 2014. Interim revision. Added additional diagram (Fig. 12B, *One-line example diagram to a PV system with ground faults*).

## 2.0 RECOMMENDATIONS

Use FM Approved equipment, materials, and services whenever they are applicable and available. For a list of products and services that are FM Approved, see the *Approval Guide*, an online resource of FM Approvals.

### 2.1 Construction and Location

*2.1.1 Wind*

2.1.1.1 Design all roof-mounted, rigid PV solar panels and their securement for wind speeds and surface roughness exposures in accordance with DS 1-28, *Wind Design*. An importance factor of 1.0 may be used if acceptable by local codes. Use Exposure C in non-coastal areas, unless all conditions for Exposure B are met. Use the topographic factor ($K_{ZT}$) as determined using ASCE 7, except for locations with relatively flat terrain (<10° ground slope), where $K_{ZT}$ can be assumed to be 1.0. Use a minimum safety factor (SF) of 2.0 for wind loads on panel anchors. A minimum safety factor of 1.6 may be used for other wind loads. Use rigid PV solar panels that are FM Approved in accordance with Approval Standard 4478, where available.

2.1.1.2 Design wind pressure resistance for ballasted or anchored roof-mounted PV panels using one of the following options:

A. Provide wind resistance based on prescriptive calculation methods provided in SEAOC PV2 (see Section 4.2).

B.Provide wind resistance based on boundary layer wind tunnel (BLWT) data per ASCE 49 (or equivalent international standard). SEAOC PV2 lists organizations that are qualified to conduct BLWT tests.

Have the design for each specific installation reviewed and accepted by a third party that is qualified in the interpretation and application of BLWT data. Computational fluid dynamics (CFD) modeling should not be used as the primary substantiation for the design of wind resistance. It should only be used to interpolate (not extrapolate) BLWT test data. The design should consider, among other things, whether the arrays are closed (wind deflectors, see Figure 1) or open.

2.1.1.3 Install rigid PV solar panels over metal standing seam roofs (SSR) using external seam clamps that are FM Approved and properly fit the specific standing seam rib type at each seam. Torque clamps and intermittently inspect for continued tightness in accordance with the manufacturer's instructions.

Installing clamps only at every other seam is not acceptable and does not follow the wind load path as designed by the SSR manufacturer. For new buildings, use SSRs that are FM Approved in accordance with Approval Standard 4471, as specified in Roof*Nav*, and installed in accordance with Data Sheet 1-31, *Metal Roof Systems*. When installed over existing SSRs, the adequacy of the roof should first be determined to be adequate. Secure clamps as close as practical to the internal seam clips securing the standing seam roof panels to purlins. A less desirable alternative for rigid PV solar panels is to fasten them through the deck and directly into the purlins.However, this option is more prone to leakage and suitable sealing of the deck must be provided.

Ensure design wind loads are in accordance with the recommendations in Section 2.1.1.1 and 2.1.1.2.

©2014 Factory Mutual Insurance Company. All rights reserved.

*Fig. 1. Wind deflectors provided on the high sides of panels in each row (closed array)*

2.1.1.4 Install ballasted rigid PV roof-mounted solar panels roofs with a maximum roof slope of 1/2 in. per ft (2.4°). A higher slope is not recommended for ballasted PV panels as it will decrease frictional resistance to wind forces and increase sliding forces from gravity loads, weakening wind resistance. Use a combined weight of solar panels, associated hardware, and additional concrete paver blocks as needed to meet wind loads per Sections 2.1.1.1 and 2.1.1.2.

Install materials on the underside of the ballasted solar panel pedestals and paver trays, which in combination with the type of roof cover below will provide the minimum coefficient of static friction (μ, the lesser of the wet or dry value) needed for the array size and ballast weight proposed. Conduct tests for μ in accordance with ASTM D1894 (or equivalent standard outside the United States). If separator sheets are proposed between the pedestals and the roof covers, friction tests should reflect their presence.

2.1.1.5 Install ballasted, rigid PV roof-mounted solar panels over fully adhered roof covers. Mechanically fasten solar panels when the roof cover is mechanically fastened.

2.1.1.6 Use concrete paver blocks for ballasted PV panels that meet specifications in ASTM C1491 and are satisfactorily tested in accordance with ASTM C1262 for exposure to freeze-thaw cycles. (Use comparable standards outside the United States.)

2.1.1.7 Keep the roof surface free from all forms of roof aggregate, including pea gravel or larger stone ballast, which could result in windborne debris damage to the PV panels. Also, if ballasted PV pedestals or paver trays are installed directly on top of roofing aggregate, it can adversely affect the arrays' resistance to sliding. Roof cover ballast that is continuous over the entire roof cover and consists of concrete paver blocks designed in accordance with DS 1-29, *Roof Deck Securement and Above-Deck Roof Components,* are acceptable if a sufficient weight of concrete paver blocks is provided above the solar panel pedestals or paver trays to provide the needed wind resistance for the solar panels.

2.1.1.8 Anchor all related equipment, such as combiner/junction boxes and conduits, to the roof deck or roof structural members (or inverters to concrete foundations) as required to provide proper anchorage against expected loads (see Figures 2A, 2B, and 9). Use mechanical anchors that can be connected to the equipment and to the roof deck or roof framing. The dead weight and resulting frictional resistance for most equipment is not sufficient to resist wind uplift and lateral wind loads.

2.1.1.9 During installation, complete all required steps for the securement of PV panels before the end of each shift. This includes the connection to previously installed panels and any needed additional ballast.

©2014 Factory Mutual Insurance Company. All rights reserved.

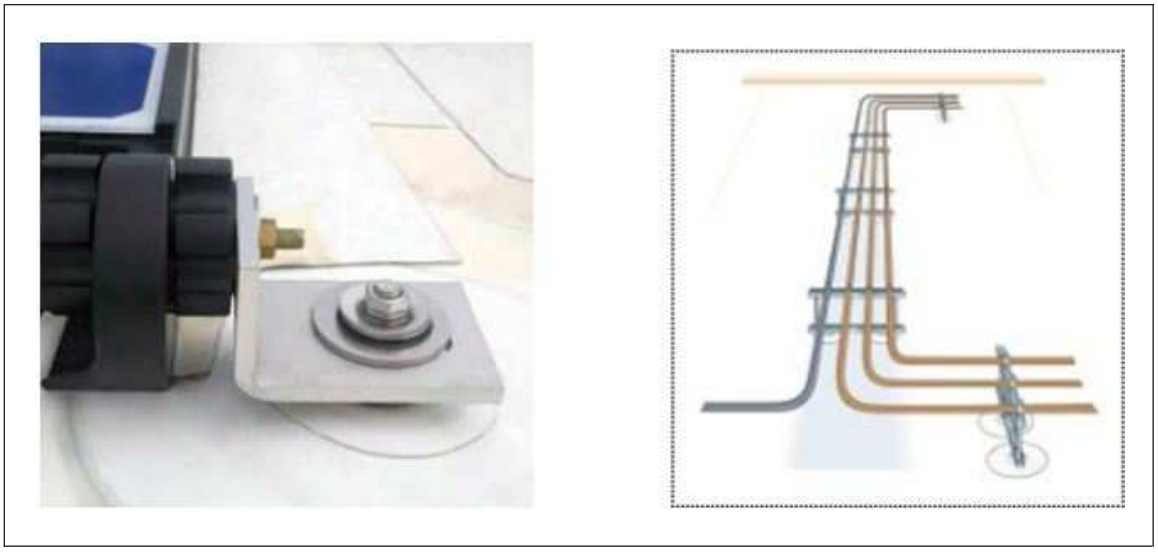

*Figs. 2A and 2B. Examples of mechanical anchors used to secure equipment to the roof deck or roof framing*

*2.1.2. Fire Exposure and Classification*

2.1.2.1 Provide noncombustible, compressible insulation (such as mineral wool) within roof expansion joints when new PV installations are to be installed on new or existing roof covers.

2.1.2.2 Install roof assemblies that are FM Approved per Approval Standard 4478 with the specific roof-mounted PV panel used when new roofs are to be installed before the installation of new roof-mounted solar panels. Use insulation or cover boards directly below the roof cover that are noncombustible. This includes gypsum cover boards and mineral wool or expanded glass insulation.

2.1.2.3 Do not use PV panel systems that contain foam plastic, such as extruded foam polystyrene, unless specifically FM Approved as part of the assembly (consider both interior or Class 1 rating and exterior fire exposure). The assembly should maintain a Class 1 or noncombustible fire rating for underside fire exposure. Do not install PV arrays within 50 ft (15 m) of maximum foreseeable loss (MFL) subdivisions (see DS 1-22, *Maximum Foreseeable Loss*).

2.1.2.4 Provide sufficient aisle spaces (4 ft, 1.2 m) between other adjacent PV arrays, other adjacent rooftop equipment or penetrations, and between PV panels and expansion or control joints on each side. Submit the proposed layout to the public fire service for review and acceptance. Minimum 4 ft (1.2 m) wide aisles at a maximum of 150 ft (46 m) in each direction is recommended and may be required by some local public fire services.

*2.1.3 Gravity Loads and Roof Drainage*

2.1.3.1 Install PV systems on roofs with minimum slopes of ¼ in. per ft (1°; 20 mm/m), but not greater than noted in Section 2.1.1.4. For existing roofs with less slope, evaluate for potential roof collapse (see DS 1-54, *Roof Loads for New Construction*. ) and vegetation growth resulting from ponding and water accumulations. Wind exposure will increase in some areas of the roof when the slope exceeds 7°.

2.1.3.2 Design the roof for snow drifting potentially caused by the PV arrays in accordance with DS 1-54. The greater the slope of the PV panels and the height of their high end, the greater snow drifting is likely to be.

2.1.3.3 Analyze existing roofs to ensure the dead weight of the proposed PV system, including any additional recommended ballast weight, does not reduce the roof resistance to snow, rain, and other live loads below acceptable levels.

2.1.3.4 Provide proper drainage for PV panel systems that contain curbs around the perimeter of an array, or continuous beams resting directly on the roof cover and supporting panels within an array. Analyze in

©2014 Factory Mutual Insurance Company. All rights reserved.

accordance with DS 1-54, *Roof Loads for New Construction*. The volume of the rainfall displaced by the PV system within the curbed area may be deducted when determining the added weight of the rainfall within the curbed area.

2.1.3.5 Design the PV panels to resist design roof snow loads, including potential drifting, in accordance with DS 1-54.

2.1.4 Hail

2.1.4.1 For the following hail-prone areas (see Appendix A and DS 1-34 for definitions), use PV panels that have the shown hail ratings (established in accordance with FM Approval Standard 4478, 4476 or 4473):

- Very Severe Hail Area: Class 4 (2 in.; 50 mm diameter ice ball)
- Severe Hail Area: Class 3 (1.75 in.; 44 mm diameter ice ball) or Class 4 (2 in.; 50 mm diameter ice ball)
- Moderate Hail Area: Class 2 (1.5 in.; 38 mm diameter ice ball), Class 3 (1.75 in.; 44 mm diameter ice ball) or Class 4 (2 in.; 50 mm diameter ice ball)

*2.1.5 Earthquake*

2.1.5.1 Attach rigid PV solar panels to the roof deck or framing for installations located in seismic zones 50 through 500 years, as defined in DS 1-2. Use welded, bolted, or other positive fastening methods as required by Chapter 13 of ASCE 7. Do not consider frictional resistance dependent on gravity. Test PV panels in accordance with Approval Standard 4478. Otherwise, the design may be in accordance with SEAOC PV1.

**2.2 Operation and Maintenance**

2.2.1 Check all equipment for damage or required maintenance after severe wind or snow storms.

2.2.2 Perform PV array insulation resistance tests every three years. The resistance measured with test voltage specified should not be less than the minimum resistance per Table 1 (refer to IEC 62446).

2.2.3 Perform a thermo-graphic survey for all electrical components (e.g., inverters, wire connections, and modules) annually.

2.2.4 Visually inspect inverters on a daily basis.

2.2.5 Test inverters annually to ensure correct operation in accordance with the manufacturer's specifications.

2.2.6 Inspect wiring connections and terminations annually for corrosion and tightness, and repair or replace as needed.

2.2.7 Inspect the sealing of roof penetrations for water-tightness annually, and repair or replace as needed.

2.2.8 Adjust the inspection and testing frequencies depending on the particular type of equipment and its duty, failure history, criticality, and condition using guidance specified in DS 5-20, *Electrical Testing*. Inspection and testing frequencies noted are a general guide.

*Table 1. Minimum Values of Insulation Resistance*

| *Test Method* | *Array voltage (V)* | *Test Voltage (V)* | *Minimum Insulation Resistance (MΩ)* |
|---|---|---|---|
| Test Method 1: Separate tests to array positive and array negative. | <120 | 250 | 0.5 |
| | 120-500 | 500 | 1 |
| | >500 | 1000 | 1 |
| Test Method 2: Array positive and negative shorted together. | <120 | 250 | 0.5 |
| | 120-500 | 500 | 1 |
| | >500 | 1000 | 1 |

2.2.9 Inspect solar panel assemblies at least annually to ensure mechanical connections between panels and supports have not loosened or become corroded, and that concrete paver blocks have not deteriorated. Tighten connections and replace corroded or deteriorated materials as needed.

©2014 Factory Mutual Insurance Company. All rights reserved.

2.2.10 Perform maintenance inspections and testing for all the relevant equipment on the alternating current (AC) side of solar electrical system in accordance with DS 5-10, DS 5-20, and DS 5-31. This includes transformers, switchgears, circuit breakers, fuses, and cables. Follow guidelines in DS 5-20 for electrical equipment with voltages of 600 V or less, and DS 5-19 for electrical equipment with voltages higher than 600 V. See DS 5-32 for cables and bus-bars.

2.2.11 Arrange pre-fire planning with the local public fire service. Ensure they are familiar with ground access, stairs to the roof, PV array aisles, the location of combiner boxes and inverters, and all related fuses and disconnects.

**2.3 Electrical**

2.3.1 Install new PV electrical energy systems, including the array circuit(s), inverter(s) and controller(s) for these systems, in accordance with Article 690 of the 2014 version of NFPA 70, *National Electric Code* (or equivalent international standard).

2.3.2 Install (new installations) or retrofit (existing installations) PV systems as follows.

A. Provide one of the following:

1. Residual current DC monitoring (RCD) on +/- feeder circuits, or

2. Electronic DC current sensing relay in ground circuit in series with ground fault fuses

B. Provide interlocks to trip the DC feed to the inverter and initiate an on-site building alarm. Emergency procedures should state that a prompt response to this alarm should include an investigation of the ground fault.

The goal of the above recommendations (parts A and B) is to resolve the initial problem prior to the second ground fault. Recent losses have shown that traditional ground fault protection (GFP) using fuses per Article 690 of the NEC is not sufficiently sensitive and allows “blind spots” with an undetected initial ground fault. Given a second ground fault, this can result in enough energy to start a roof-top fire. For more information, see Figures 3 and 4 and Section 3.3.

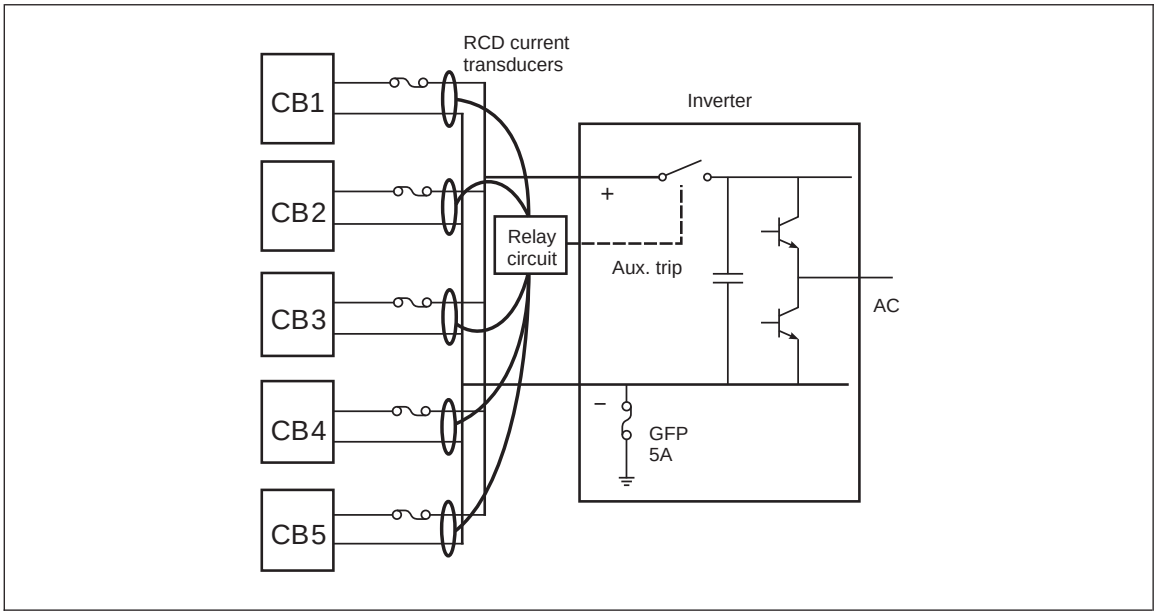


*Fig. 3. Residual current measurements with auxiliary trip (CB = combiner box, RCD = residual current disconnect, GFDI = ground fault detection and interruption)*

2.3.2.1 Provide ground fault detection systems with an alarm function for ungrounded systems.

2.3.3 Provide a remote DC disconnect for each combiner box as close as possible to the output side of the box for all new installations. See Figures 5 and 6.

©2014 Factory Mutual Insurance Company. All rights reserved.

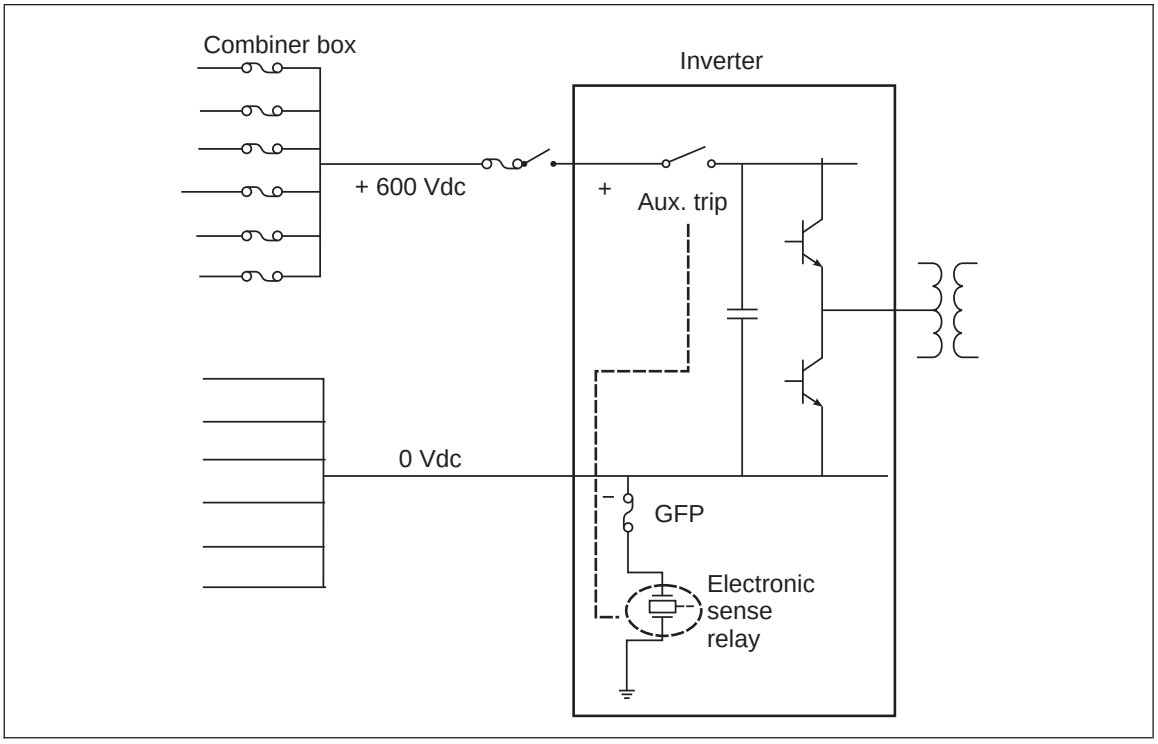


*Fig. 4. Electronic current sensing relay in ground circuit*

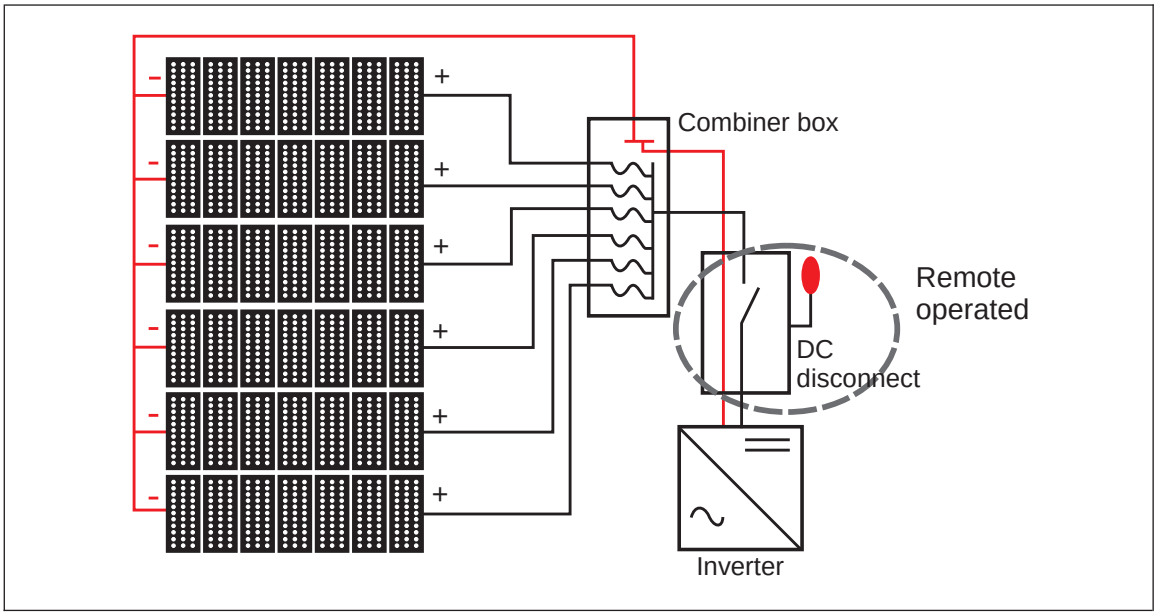


*Fig. 5. One-line example diagram of remote-operated DC disconnect for grounded PV system (the negative pole is grounded at the inverter in this example)*

2.3.4 Do not install electrical wiring within the rib opening of steel decking or otherwise within the plane of the above-deck components. Besides serving as a possible ignition source, it would also inhibit access for maintenance and repair and be subject to damage from mechanical fasteners used to secure above-deck roof components.

©2014 Factory Mutual Insurance Company. All rights reserved.

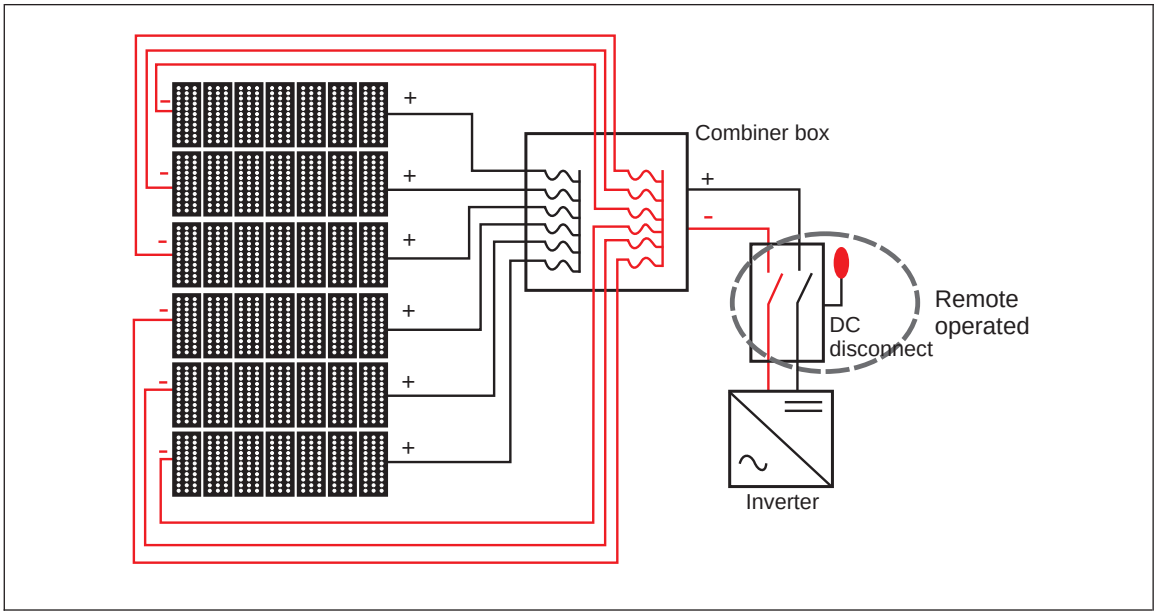


*Fig. 6. One-line example diagram of remote-operated DC disconnect for ungrounded PV system*

2.3.5 Ensure adequate provision is made for expansion and contraction due to extreme temperature fluctuations during the year. This includes wiring, as well as the interface between the PV panels and the roof cover.

2.3.6 Provide surge protection for the inverters on the DC and AC sides.

2.3.7 Provide reverse current overload fuses (RCOL) for each string of panels to prevent reverse current from undamaged parallel panel circuits being exerted on damaged panels.

2.3.8 Design and install cables and bus-bars in accordance with DS 5-31.

2.3.9 Use DC wires that are moisture and sunlight resistant and have a minimum temperature rating of 194°F (90°C).

2.3.10 Use rigid PV panels that meet electrical performance criteria per IEC/EN 61215, *Crystalline Silicon Terrestrial Photovoltaic (PV) Modules - Design Qualification and Type Approval.*

Use rigid PV panels that comply with criteria for electrical safety per IEC/EN 61730-2, Photovoltaic (PV) Module Safety Qualifications, Part 2: Requirements for Testing, or ANSI/UL 1703, *Flat Plate Photovoltaic Modules and Panels.*

## 3.0 SUPPORT FOR RECOMMENDATIONS

### 3.1 Basic Operation of PV Systems

Rigid PV solar panels are made up of semiconductors in the form of individual silicon cells wired in series, and usually protected above by tempered glass and on the bottom by a polymeric encapsulant (back-sheet). Back-sheets are laminated in up to 3 layers and can consist of almost any combination of ethylene vinyl acetate (EVA), polyethylene terephthalate (PET), Kynar, or Tedlar. An anti-reflective coating is provided on the top surface. Modules are linked together in series to form strings, and then individual strings are connected within a combiner box to form an array. The modules within the array convert energy from sunlight into direct current (DC) electrical power. This power can be stored as DC, but more commonly it is converted to AC using an inverter, and then fed into a large electrical grid, or in some cases used directly on-site. Usually one or more arrays/combiner boxes are connected to an inverter when the electric power is converted from DC to AC.

Common sites for PV panels are roofs of warehouses and other facilities that do not require extensive rooftop equipment that would shadow the PV panels. Aisles are often provided within or between arrays to allow

©2014 Factory Mutual Insurance Company. All rights reserved.

access for maintenance of rooftop equipment and manual firefighting, as well as to prevent the panels being shadowed by other equipment, higher roofs, or other obstructions to sunlight. For additional information on rigid PV panels, see DS 7-106.

### 3.2 Wind Resistance

#### *3.2.1 Boundary Layer Wind Tunnel (BLWT) Testing and Ballasted PV Systems*

Testing in a boundary layer wind tunnel (BLWT) is conducted to determine wind loads and resistance for roof-mounted PV panels. It is important that the scaled models used to replicate the proposed roof-mounted panels be as representative as possible, particularly with ballasted arrays. This includes the sizes of individual panels, the weights of the panels and ballast, the PV panel slope (see Figure 8), the coefficient of friction (μ) between the roof surface and the underside of the panel pedestals or paver trays, and the size of the array. Tests should replicate the minimum array size to be used, with regard to the number of interconnected panels within a given array and the minimum number of panels within a row or column.

To allow the test data to be used for a variety of combinations of roof cover types and pedestal pads/paver trays, separate testing may be needed to quantify the coefficient of friction between the two surfaces. Testing should reflect any slip sheets that may be used. Since movement of any panel defines failure, the use of the static coefficient of friction may be used in lieu of the dynamic value. While often the wet coefficient of friction yields a lower value, test data reflects that in some cases the dry value is lower.

Testing needs to be conducted in a boundary layer wind tunnel (BLWT) rather than an aerospace wind tunnel (AWT). While there are some similarities between the two types, the BLWT simulates wind flow toward a building by providing obstructions between the entrance of the wind into the tunnel and the scaled building model. Typically, but not always, an open terrain or Exposure C is simulated. The simulated building is often a flat rigid object. This allows the wind to hit the wall of the model, flow over it, and create turbulence and vortices that cause higher uplift pressures above the roof, particularly at the perimeter and corner areas. Such a realistic effect is not provided when using an AWT. Even in a BLWT, internal building pressure effects and vertical movement of the roof cover are not simulated. Such movement of the roof cover can increase the drag and lift coefficients for the PV panels, and the presence of a mechanically fastened roof cover (MFRC, see Figure 7) can make the results of the BLWT invalid. This is not a concern with fully adhered roof covers. PV panels used over MFRC should be mechanically fastened.

While there are numerous AWTs, a limited number of BLWTs exist. The following locations have BLWTs:

- Colorado State University (CSU)
- Western University (formerly the University of Western Ontario or UWO), Ontario, Canada
- Cermak, Peterka and Peterson (CPP) in Colorado and Australia
- Rowan, Williams, Davies and Irwin, Inc. (RWDI), Canada
- I.F.I. Institute, Germany
- Force Technology, Europe
- University of California, Davis
- University of Maryland
- University of Minnesota
- Concordia University, Montreal, Quebec, Canada

A. Experimental wind load estimates on roof-mounted solar panels can be inaccurate for the following reasons:

1. The experiments were conducted without considering the effect of the building on the solar panels. This includes experiments that were conducted in an AWT, which is used for testing cars and aircraft. These types of wind tunnels produce smooth wind at a constant speed, and at very low turbulence intensity (< 0.5%). In order to study the wind load on roof-mounted solar panels, experiment have to be conducted in a BLWT, where the wind is turbulent and gusty with high turbulence intensity (>10%). The wind tunnel

©2014 Factory Mutual Insurance Company. All rights reserved.

experiments also have to be conducted in accordance with the ASCE's *Wind Tunnel Studies of Buildings and Other Structures*.

2. The experiments were conducted only for a single wind direction. Just like the roof itself, the tilted solar panels can experience substantial wind loads from cornering winds.

B. Wind load estimates obtained using only CFD simulations on roof-mounted solar panels are not recommended by ASCE and may be inaccurate for the following reasons:

1. The simulations were performed without considering the effect of the building on the solar panels.

2. Validation of the CFD simulations with existing literature or with BLWT experiments were not performed.

3.2.1.1 Increased Ballast Around Openings

Often there will be aisle spaces around other roof-mounted equipment that break the continuity of the interconnection between panels. This reduces the wind load distribution, as well as the shielding affect against wind that the outer panels in the array provide for those panels farther in from the edges. In order to account for this, additional ballast should be provided for the panels immediately around the openings.

*Fig. 7. Mechanically fastened roof cover billowing when subjected to wind pressure*

©2014 Factory Mutual Insurance Company. All rights reserved.

*Fig. 8. Solar panels with steeper slopes or lacking wind deflectors will experience greater wind effects*

*Fig. 9. Equipment lacking anchorage to roof framing*

©2014 Factory Mutual Insurance Company. All rights reserved.

*3.2.2 PV Systems Fastened to Standing Seam Roofs (SSR)*

Rigid PV panels can be mechanically fastened to SSRs and can be FM Approved in accordance with Approval Standard 4478. For more information on SSRs, see DS 1-31. SSR panels are seamed to the internal clips, which are pre-fastened at each deck rib to each steel purlin or a continuous substrate. The wind design for SSR assumes the wind load is distributed evenly to each internal clip. An external seam clamp, similar to those used to enhance the wind resistance of SSRs, is used to connect PV panels to the SSR deck ribs (see Figures 10 and 11). These clamps do not penetrate the seam. One clamp should be provided at each standing seam rib at the down-slope and up-slope edges of the PV panels. The spacing between clamps may vary from about 3 to 10 $ft^2$ (0.3 to 1.0 $m^2$) per clamp, depending on the SSR rib spacing and the distance between internal clips along the deck seams. It is important that the individual clamp be designed to fit the specific seam of the SSR.

*Fig. 10. Solar panels secured to standing seam roofs using external seam clamps*

©2014 Factory Mutual Insurance Company. All rights reserved.

*Fig. 11. Unacceptable arrangement: clamp missing from SSR rib below middle of outer panel edge*

### 3.3 Fires and Electrical Ignition Sources

#### *3.3.1 Ground Fault Protection*

Numerous fires have started in U.S. installations of roof-mounted PV arrays due to inadequate ground fault protection. Such installations in the United States typically include conductors that are intentionally grounded, but have ground fault detection designed for ungrounded conductor faults. This design is based on conservative assumptions of leakage current to avoid nuisance trips. However, the present ground fault detection uses fuses that are not sensitive enough, resulting in undetected ground faults. Such systems have become more prevalent in recent years and, as they continue to age, the frequency of such fires could increase.

Fires of electrical origin are fairly common in roof-mounted solar arrays. There are sufficient combustibles present in the form of roof coverings and insulation, which are more likely to become ignited with the PV system there. Also, the redirection of flames and reradiation of heat by the PV panels from a roof fire tend to create more fire spread than if the panels were not there. Following the electrical guidance in this document will reduce, but not eliminate, the potential for a fire.

#### *3.3.2 Preventing Fires from DC Ground Fault in PV Arrays*

A ground fault in a PV array is an accidental electrical short circuit involving ground and one or more normally designated current-carrying conductors. Ground faults in PV arrays are safety concerns because they may generate DC arcs at the fault point on the ground fault path, damage surrounding insulation, and create fire hazards. The risk of fire is escalated substantially if a second ground fault is developed. A DC ground fault is common in PV systems and result from the following causes:

A. Insulation failure of cables (e.g., an animal chewing through cable insulation and causing a ground fault)

B. Incidental short-circuit between the normal conductor and ground (e.g., a cable in a PV junction box incidentally contacting a grounded conductor)

C. Ground faults within PV modules (e.g., a solar cell short-circuiting to grounded module frames due to deteriorating encapsulation, impact damage, or water corrosion in the PV panel

D. Abraded wire insulation caused during installation or from thermal movement of the components

©2014 Factory Mutual Insurance Company. All rights reserved.

To properly protect PV arrays from ground fault damage and ensuing fire, NFPA 70, National Electrical Code, Article 690.5(A), specifies that ground fault protection device (GFPD) or system must be capable of detecting a ground-fault current, interrupting the flow of fault current, and providing an indication of the fault. According to recent industry experience, there are some cases where the first ground fault could not be detected by the currently design GFPD (such as applying a fuse in the grounding electrode). A second ground fault made the fault current flow in the array, leading to fire. Figure 12 (A, B and C) illustrates the unnoticed first ground fault and the danger of a second ground fault in a PV system. Sophisticated techniques, such as residual current monitoring, to measure the imbalance of current flow in the positive and negative feeders from the inverter to each combiner box are being developed to improve ground fault protection.

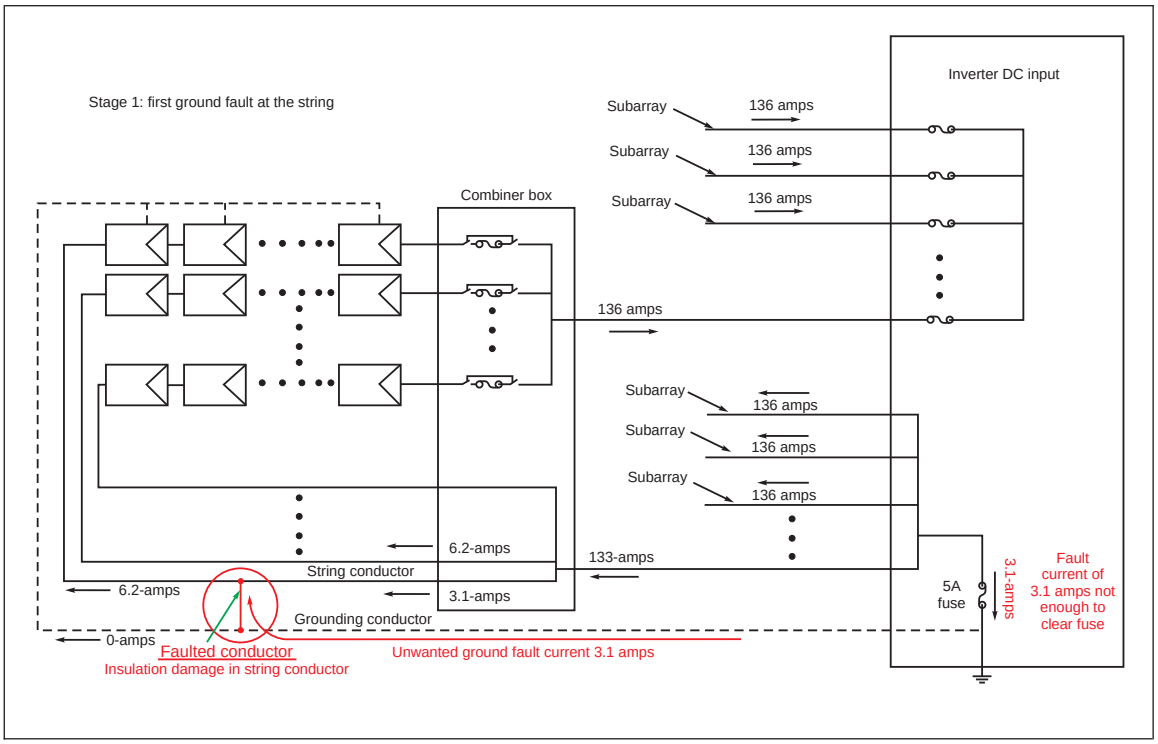


*Fig. 12A. One-line example diagram to a PV system with ground faults*

In Figure 12, note the following:

1. The PV system shown has eight combiner boxes with a normal DC output of about 136 A.

2. The DC string conductor as the input of the combiner box has a normal DC current of 6.2 A.

3. The first ground fault at the string conductor only generates about 3.1 A ground fault current, which is not sufficient to melt the fuse as the ground fault protection in this system (Part A)

4. When the 2nd ground fault develops at the array conductor, a return path is established (internal short circuit developed). The ground fault protection fuse operates (Part B), however, is no longer able to interrupt the fault current because of the internal return path established by these two ground faults. In the example shown, the string conductor, which normally carries 6.2 A current, has about 1082 A fault current. This high level of fault current can potentially cause a fire (Part C).

### 3.4 Exterior Fire Spread in Roof-Mounted PV Arrays

Where roof-mounted PV arrays are present, the risk of exterior fire spread is much greater than it would be for the roof assembly alone. This would be the case even if the solar panels had no combustible components. A typical fire scenario is the electrical wiring associated with the solar PV array causing ignition of the roof assembly. The potential flame height is largely a function of the type of roof cover and insulation immediately below the array. While the presence of solar panels may affect combustion air being drawn to the fire, it otherwise does not reduce, but redirects the flames from the roof fire.

©2014 Factory Mutual Insurance Company. All rights reserved.

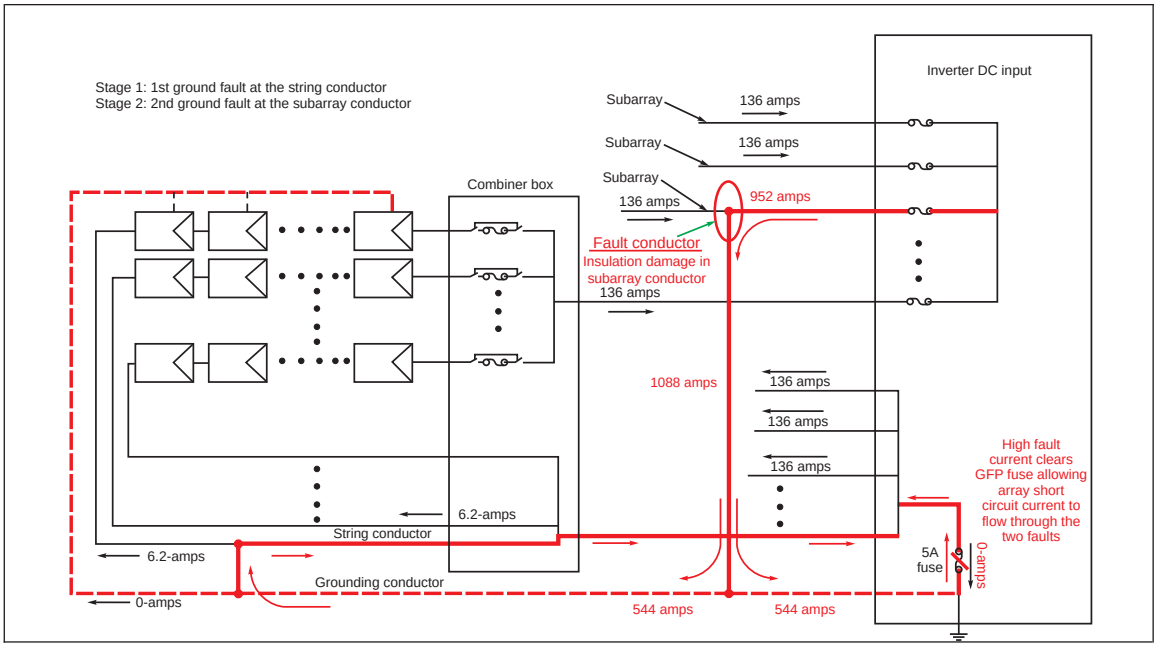


*Fig. 12B. One-line example diagram to a PV system with ground faults*

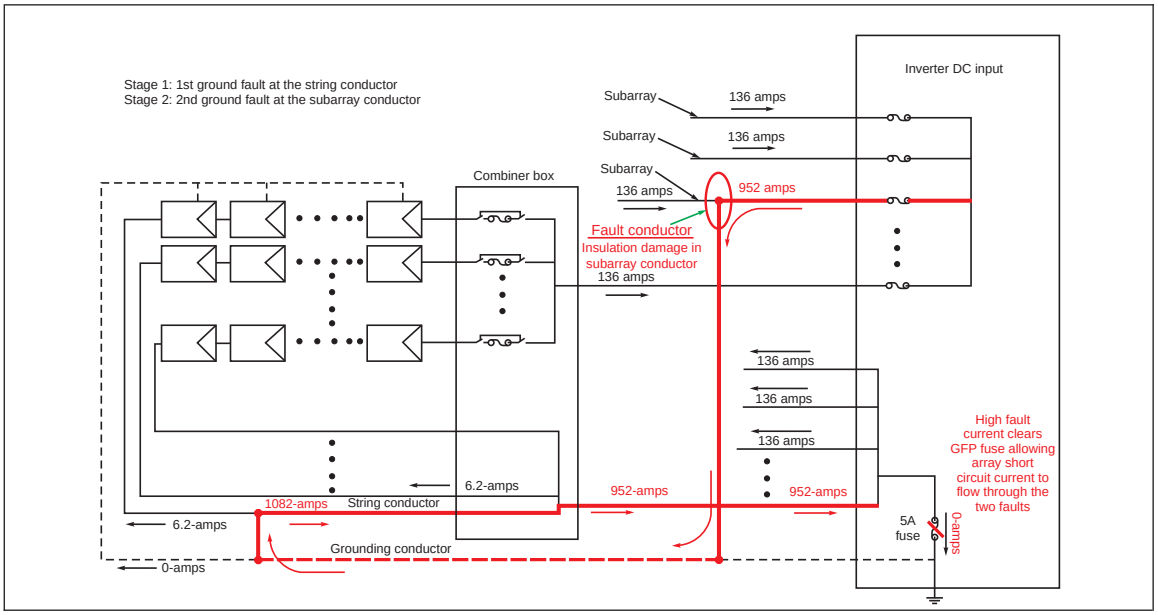


*Fig. 12C. One-line example diagram to a PV system with ground faults*

### 3.5 Gravity Loads and Roof Drainage

For systems that use curbs or continuous support beams, ensure these components do not adversely affect roof drainage (rain water weighs 5.2 psf per in. of depth, or 1 kg/m$^2$ per mm). Consider the design rainfall intensity on the roof, paths to the roof drains, how much water will have to flow through the curbs or beams, and whether the drainage holes or spaces are large enough to accommodate that flow. The height of the curb should be limited to act as a secondary drainage method from within the curbed area in case drain holes are clogged by leaves or debris. For additional information on roof drainage, see DS 1-54.

©2014 Factory Mutual Insurance Company. All rights reserved.

### 3.6 Hail Resistance

Hail resistance of rigid PV panels should be determined by ice ball testing in accordance with Approval Standard 4478. Hail resistance of flexible PV panels should be determined by steel ball testing in accordance with Approval Standard 4476.

Impact from hail larger than that for which the panels were successfully tested could cause severe damage to the PV panels.

### 3.7 Flexible PV Installations

Adhered, flexible solar panels are FM Approved in accordance with Approval Standard 4476, as specified in Roof*Nav* and are required to be adhered across their entire underside. Flexible solar panels that are only secured around their edges will not uniformly distribute the wind load to the roof cover they are adhered to.

## 4.0 REFERENCES

### 4.1 FM Global

Data Sheet 1-2, *Earthquakes*
Data Sheet 1-22, *Maximum Foreseeable Loss*
Data Sheet 1-28, *Wind Design*
Data Sheet 1-29, *Roof Deck Securement and Above-Deck Roof Components*
Data Sheet 1-31, *Metal Roof Systems*
Data Sheet 1-54, *Design Loads for New Construction*
Data Sheet 5-11, *Lightning Protection*
Data Sheet 5-19, *Switchgear and Circuit Breakers*
Data Sheet 5-20, *Electrical Testing*
Data Sheet 5-23, *Emergency and Standby Power Generating Systems*
Data Sheet 7-106, *Ground-Mounted Photovoltaic Solar Power*

FM 4476, *Approval Standard for Flexible Photovoltaic Modules*
FM 4478, *Approval Standard for Rigid Photovoltaic Modules*
ANSI/FM 4473, *Test Standard for Impact Testing of Rigid Roofing Material by Impact Testing with Freezer Ice Balls*
*Approval Guide,* Building Materials section, an online resource of FM Approvals
Roof*Nav*, an online resource of FM Approvals for roofing professionals

### 4.2 Other

American Society of Civil Engineers (ASCE). *Minimum Design Loads for Buildings and Other Structures.* ASCE 7.

American Society of Civil Engineers (ASCE). *Wind Tunnel Studies of Buildings and Other Structures. Manual of Practice 67.*

American Society of Civil Engineers (ASCE). *Wind Tunnel Testing for Buildings and Other Structures. ASCE 49.*

ASTM International. *Standard Specification for Concrete Roof Pavers.* ASTM C1491-11.

ASTM International. *Standard Test Method for Evaluating the Freeze-Thaw Durability of Dry-Cast Segmental Retaining Wall Units and Related Concrete Units*. ASTM C1262-10.

Underwriters Laboratories (UL). *Flat-Plate Photovoltaic Modules*. ANSI/UL 1703.

International Electrotechnical Commission (IEC). *Grid Connected Photovoltaic Systems: Minimum Requirements for System Documentation, Commissioning Tests and Inspection.* IEC 62446.

International Electrotechnical Commission (IEC). *Crystalline Silicon Terrestrial Photovoltaic (PV) Modules: Design Qualification and Type Approval.* IEC/EN 61215.

International Electrotechnical Commission (IEC). *Photovoltaic (PV) module safety qualifications, Part 2: Requirements for Testing.* IEC/EN 61730-2.

©2014 Factory Mutual Insurance Company. All rights reserved.

National Fire Protection Association (NFPA). *National Electric Code*. NFPA 70.

Structural Engineers Association of California (SEAOC). *Structural Seismic Requirements and Commentary for Rooftop Solar Photovoltaic Systems.* SEAOC PV1-2012.

Structural Engineers Association of California (SEAOC). *Wind Design for Low-Profile Solar Photovoltaic Arrays on Flat Roofs.* SEAOC PV2-2012.

### 4.3 Bibliography

ASTM International. *Fire Tests of Roof Coverings*. ASTM E108.

Grant, Casey C. *Fire Fighter Safety and Emergency Response for Solar Power Systems. Fire Protection Research Foundation (FPRF).* May 2010 (revised October 2013).

International Standards Organization (ISO). *General Requirements for the Competence of Testing and Calibration Laboratories*. ISO/IEC 17025:2005.

Jackson, P. “Target Roof PV Fire of 4-5-09, 9100 Rosedale Hwy, Bakersfield, CA.” City of Bakersfield, California, Development Services/Building Department Memorandum.

Los Angeles City Fire Department Requirement. *Solar Photovoltaic System*. FPB Requirement No. 96, 2-03-09.

Pagnamenta, R. “BP Solar Panel Blaze Raises Concerns Over Alternative Energy.” The Times, Monday June 29, 2009.

## APPENDIX A GLOSSARY OF TERMS

*Aerospace wind tunnel:* A wind tunnel that simulates horizontal wind forces acting directly on an object. It does not simulate conditions between the fans and the object within the lower portion of the boundary layer, which is required to replicate the surface roughness exposure related to wind design of the building and rooftop equipment. Neither does it replicate wind flow over a wall of a modeled structure below the rooftop equipment that would be required to simulate actual suction effects in addition to the horizontal forces.

*Array size:* The number of interconnected PV panels (the minimum number of panels within each row and each column) and the gross plan area occupied within a given array. There is usually a slight (fraction of an inch) separation between panels in the east-west direction and sufficient separation (depending on panel slope) between rows to prevent shadowing.Wind tunnel or field model tests should replicate the minimum array size required. Data for a larger array does not justify the design for a smaller array.

*Ballasted:* Not adhered to the roof cover below, nor fastened to the roof deck or structure. Resistance to wind loads is provided by the weight of the panels, mounting equipment, and any additional ballast. (Same as “loose laid.”)

*Boundary layer wind tunnel:* A wind tunnel with a long transition between the fans and the object, and that has obstructions to replicate the lower portion of the boundary layer and the surface roughness exposure related to wind design of the building and rooftop equipment. Testing is done with scaled models of rooftop equipment and the building upon which it is installed.

*Closed mounting system:* A PV mounting system that has a wind deflector on the high side (north side in northern hemisphere and south side in southern hemisphere) of each row of panels, but may or may not have one on the east and west ends of each row.

*Coefficient of friction ($\mu$):* A dimensionless coefficient used to quantify resistance to lateral movement (in this case, between the undersides of the panel mounts and the top surface of the roof cover). It is equal to the lateral load resistance divided by the force normal to the two mating surfaces. This will vary depending on the construction of the underside of the panel mount and the type of roof cover. Such construction includes, but is not limited to, stainless steel, aluminum, coated metal, or metal with a pad (such as a piece of single-ply roof cover material or rubber) adhered to its underside.

*Computational fluid dynamics (CFD):* A form of computer modeling that uses numerical methods and algorithms to solve and analyze problems that involve fluid flows. Computers are used to perform the calculations required to simulate the interaction of fluids with surfaces defined by boundary conditions. Validation of such software is performed using a wind tunnel.

©2014 Factory Mutual Insurance Company. All rights reserved.

*FM Approved:* Products or services that have satisfied the criteria for Approval by FM Approvals. Refer to the *Approval Guide*, an online resource of FM Approvals, for a complete list of products and services that are FM Approved.

*Hail day:* A day in which minimum ¾ in. (19 mm) diameter hail occurred within 25 mi (40 km) of a location.

*Inverter:* An electrical device used to convert direct current (DC) electrical power to alternating current (AC) electrical power.

*Loose Laid*: not adhered to the roof cover below, nor fastened to the roof deck or structure. Resistance to wind loads is provided by the weight of the panels, mounting equipment, and any additional ballast. (Same as “ballasted.”)

*Moderate hail hazard area:* Areas in the United States designated as such on the Hailstorm Hazard Map in DS 1-34, and areas outside the United States that have experienced, on average, fewer than three hail days per year.

*Non-sheltered PV panels:* PV panels located on the exterior side of an array in the perimeter row(s) of PV panels, and that are not sheltered from the wind load from other panels, and for which the wind load may be greater than that of the interior, sheltered panels.

*Open mounting system:* A PV-mounting system that does not have a wind deflector on the high side (north side in northern hemisphere and south side in southern hemisphere) of each row of panels.

*Photovoltaic (PV) system:* A system that uses solar panels to convert sunlight into electricity. It consists of PV panels, support framework, and electrical connections and equipment to allow regulating and converting the electrical output from DC to AC.

*PV panel:* An individual unit consisting of numerous cells, usually 60 or 72. It is usually about 39.4 in. (1 m) in the north-south direction and 65 to 77 in. (1.65 to 2.0 m) in the east-west direction. In most cases it is bounded by edge framing. In some cases panels are also reffered to as modules, particularly for ballasted situations. For anchored installations, three or four modules connected together may be considered a panel.

*Roof control joint:* A construction joint that provides a break in the continuity of above-deck roof components to prevent damage to the roof cover from thermal movement. This joint does not provide a break in the roof deck.

*Roof expansion joint:* A construction joint that provides a break in the continuity of the building framing, roof deck, and above-deck roof components to prevent damage to the building components from thermal movement.

*Setback:* The distance between the outside edge of a roof supporting solar panels and the outer edge of the solar array.

*Severe hail hazard area:* Areas in the United States designated as such on the Hailstorm Hazard Map in DS 1-34, and areas outside the United States that have experienced, on average, at least three hail days per year.

*Shadowing:* Shade created by neighboring objects that necessitate relocation of solar panels and sometimes openings within the array. This can create wind forces on solar panels immediately adjacent to the opening that are higher than the forces on the interior of the array.

*Sheltered PV panels:* PV panels located on the interior side of the perimeter row(s) of PV panels that are somewhat sheltered by the perimeter panels and for which the wind load is somewhat less than for the perimeter panels.

*Very severe hail hazard areas:* Areas in the United States designated as such on the Hailstorm Hazard Map in DS 1-34.

## APPENDIX B DOCUMENT REVISION HISTORY

October 2014. Interim revision. Added additional diagram (Fig. 12B, *One-line example diagram to a PV system with ground faults*).

July 2014. This is the first publication of this document.

©2014 Factory Mutual Insurance Company. All rights reserved.