BUREAU ENGINEER _____ DRAFTSMAN K.A. DATE _____ SCALE NTS

DIVISION OF PUBLIC WORKS BUREAU _____

REVISIONS			
NO.	DATE	BY	REMARKS

CONVERSIONS	
ENGLISH	METRIC

NOTES:

ALL METALLIC SURFACES TO BE COVERED WITH ONE COAT OF BLACK PAINT.

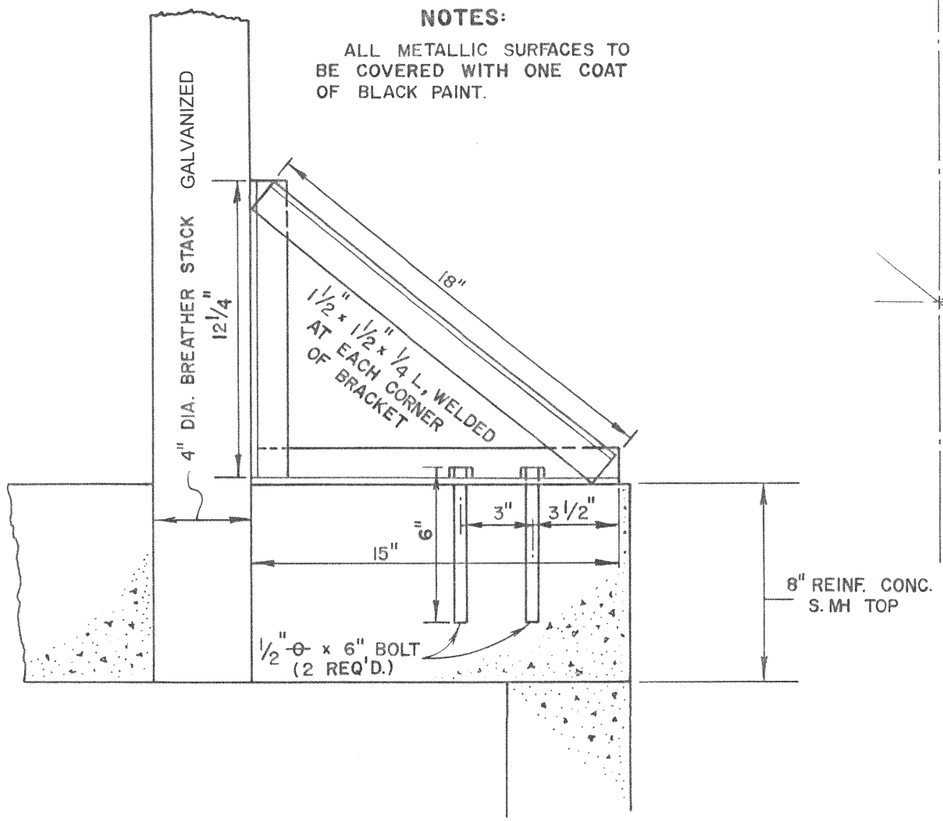

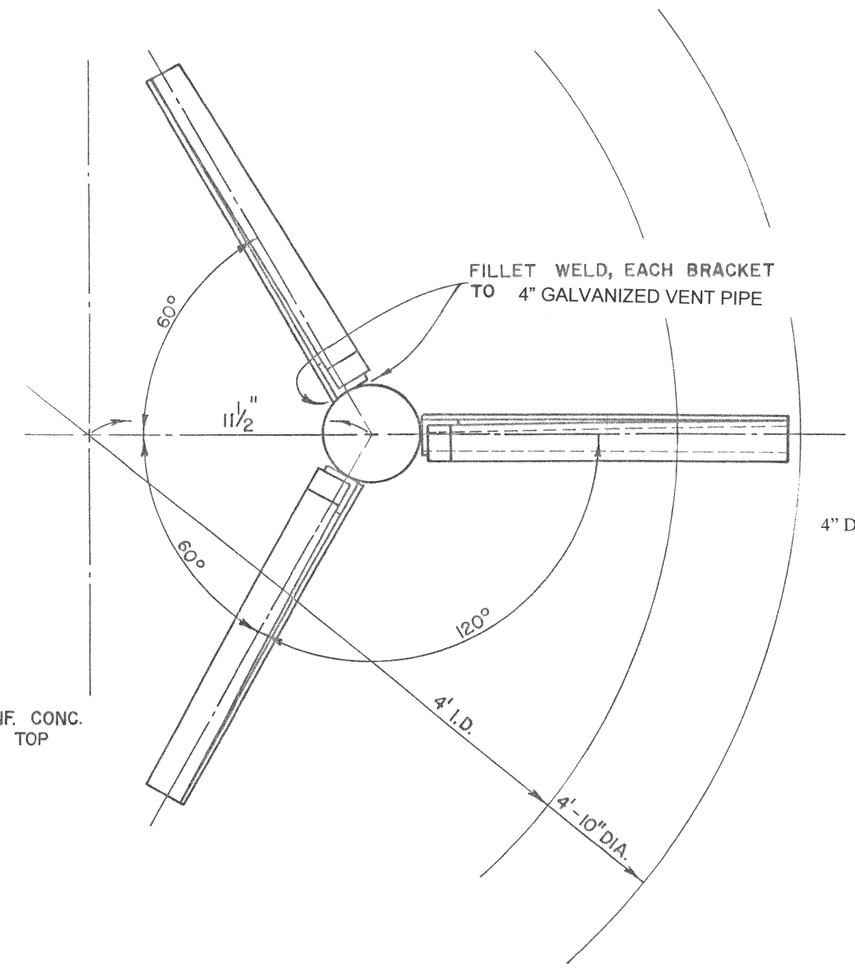

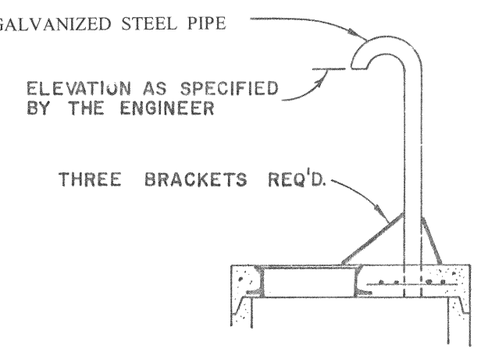

CITY OF MEMPHIS
DIVISION OF PUBLIC WORKS

DESIGN STANDARD
FOR
BRACKET TO BRACE BREATHER STACK

CITY ENGINEER _____ DATE _____

SST-14