DIVISION OF PUBLIC WORKS BUREAU, Robert E. Davis Jr. BUREAU ENGINEER A.S. JR. DRAFTSMAN, DATE 11-77 SCALE NONE

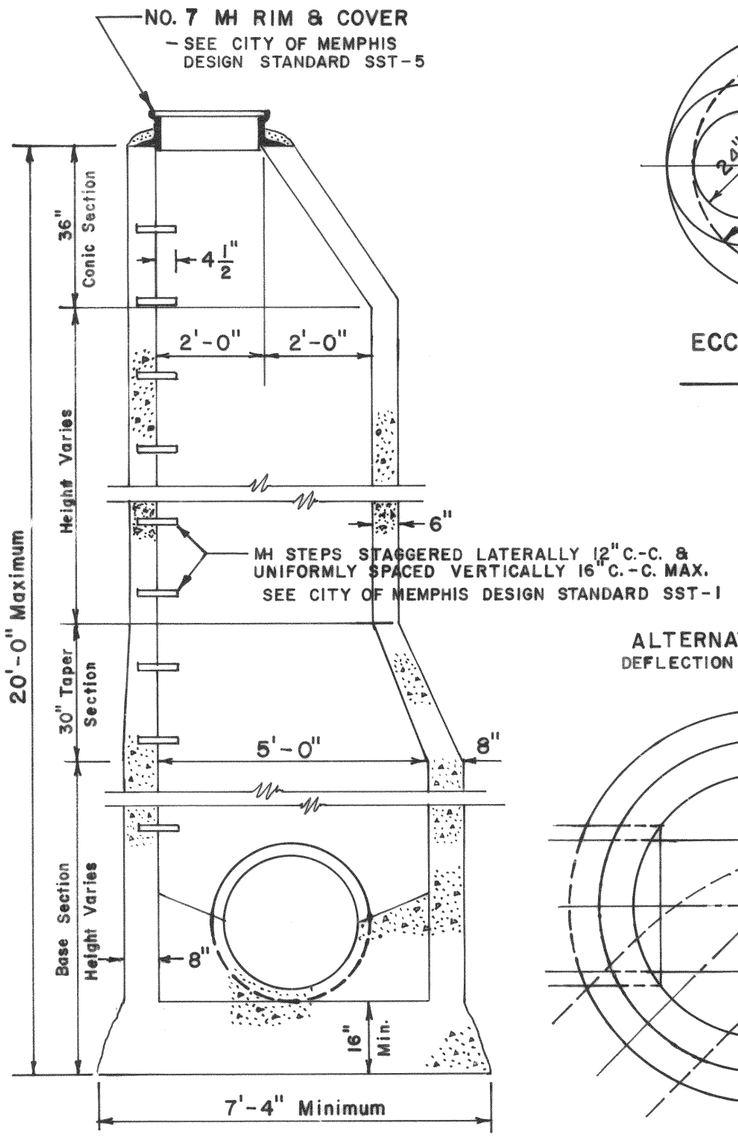

MANHOLE ELEVATION
FOR
18" THRU 24" DIA. SEWERS

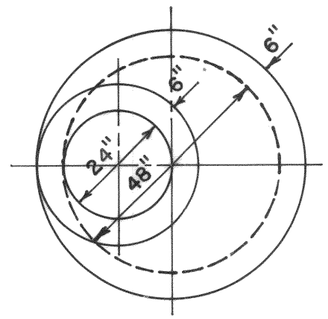

ECCENTRIC CONE
PLAN

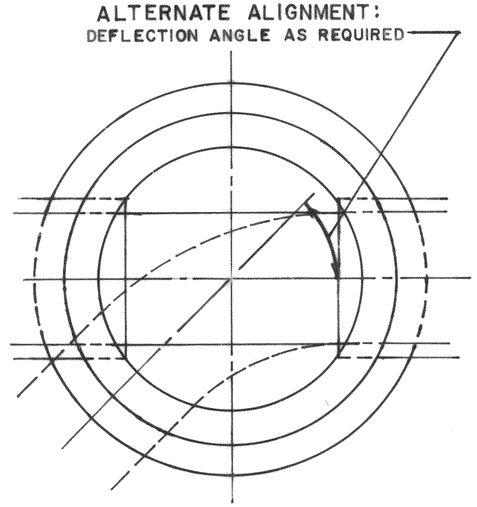

MANHOLE INVERT PLAN

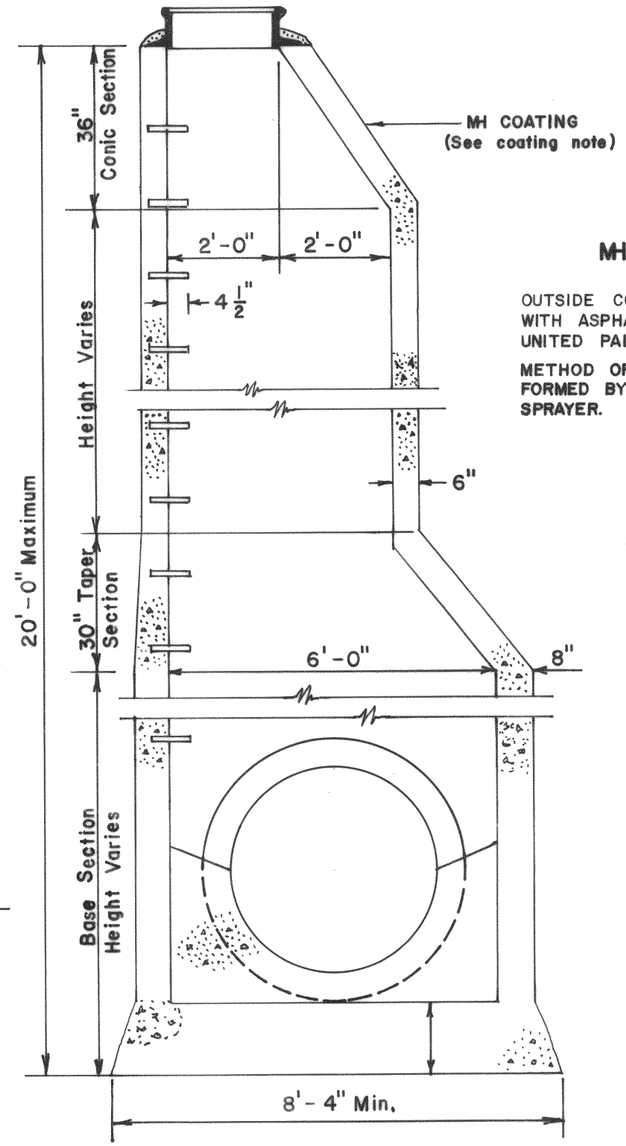

MANHOLE ELEVATION
FOR
27" THRU 42" DIA. SEWERS

MH COATING NOTE:

OUTSIDE COATING OF MANHOLE SHALL BE WITH ASPHALTIC BLACK, AS AVAILABLE AT UNITED PAINT COMPANY.

METHOD OF APPLICATION SHALL BE PERFORMED BY BRUSH OR BY LOW PRESSURE SPRAYER.

NOTES:

IF MANHOLE CONSTRUCTION IS NOT CONTINUOUS POUR, A RUBBER WATER STOP GASKET WILL BE REQUIRED.

REVISIONS

NO.	DATE	BY	REMARKS

CONVERSIONS

ENGLISH	METRIC

CITY OF MEMPHIS
DIVISION OF PUBLIC WORKS

DESIGN STANDARD

FOR

MONOLITHIC MANHOLE
POURED-IN-PLACE
18" THRU 42" DIAMETER SEWERS

Ray Mason — 1-25-80
PRINCIPAL CIVIL ENG'R. — DATE

J. N. James Jr. — 1-25-80
DEPUTY DIR./CIVIL ENG'R — DATE

R.E. Davis, Jr 12-7-77 — DWG. NO. SST-7

JC-5756