CITY OF MEMPHIS
DESIGN DIVISION
FILE NO.

Index Of Sheets

SHEET NO.	DESCRIPTION
1	TITLE SHEET
2	ESTIMATED ROADWAY QUANTITIES
3	TYPICAL SECTIONS
4-5	GENERAL NOTES AND SPECIAL NOTES

SHEET NO.	REV.	DESCRIPTION
RD-A-1	12-18-99	STANDARD ABBREVIATIONS
RD-L-1	10-26-94	STANDARD LEGEND
RD-L-2	09-05-01	STANDARD LEGEND FOR UTILITY INSTALLATIONS
RD-L-3	04-15-04	STANDARD LEGEND FOR SIGNALIZATION AND LIGHTING
RD-L-4	04-15-04	STANDARD LEGEND FOR SIGNALIZATION AND LIGHTING
RD01-S-11	04-04-03	DESIGN AND CONSTRUCTION DETAILS FOR ROADSIDE SLOPE DEVELOPMENT
T-FAB-1	05-27-97	FLASHING YELLOW ARROW BOARD
T-M-1	04-15-04	DETAILS OF PAVEMENT MARKINGS FOR CONVENTIONAL ROADS AND MARKING ABBREVIATIONS
T-M-2	09-05-04	DETAILS OF PAVEMENT MARKINGS FOR CONVENTIONAL ROADS
T-SG-2	07-29-04	LOOP LEAD-INS CONDUIT AND PULL BOXES
T-SG-3	11-11-04	STANDARD NOTES AND DETAILS OF INDUCTIVE LOOPS
T-SG-3A		ALTERNATE DETECTION DETAILS

N

CITY OF MEMPHIS
DIVISION OF PUBLIC WORKS
BUREAU OF ENGINEERING

SHELBY COUNTY

VOLLINTINE AVENUE

FROM: AYERS STREET
TO: BELLEVUE BOULEVARD

RESURFACING

STP GROUP 3 (PART 4 OF 4)

LOCALLY MANAGED PROJECT

TENN.	YEAR	SHEET NO.
	2010	1
FED. AID PROJ. NO.	STP-M-9409(132)	
STATE PROJ. NO.	79LPLM-F3-095	

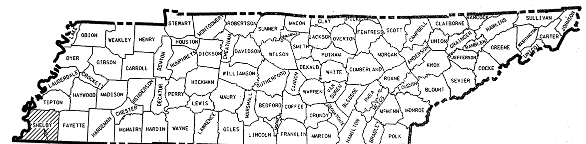

PROJECT SITE

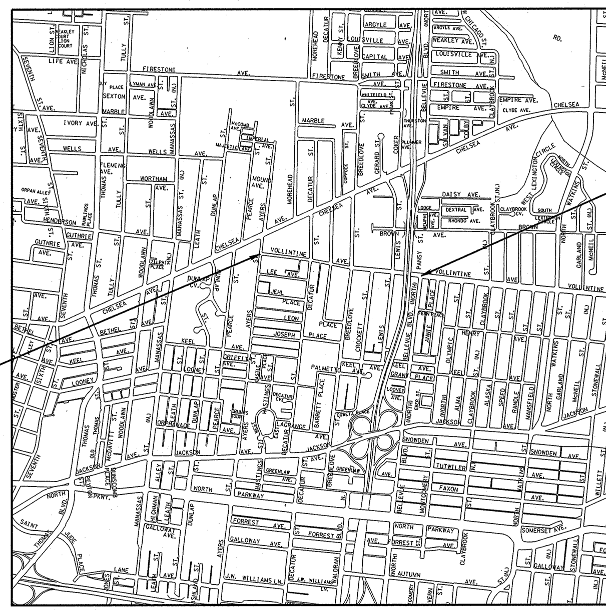

END PROJECT
(BELLEVUE BOULEVARD)

BEGIN PROJECT
(AYERS STREET)

SCALE: 1"= 1000'

UTILITY OWNERS

UTILITY	UTILITY CONTACT
MLGW	MEMPHIS LIGHT GAS AND WATER TOM WORD (901)528-4186 220 S. MAIN ST. MEMPHIS, TN. 38101
SEWER	CITY OF MEMPHIS GARY VADEN (901)576-6725 125 N. MAIN ST. MEMPHIS, TN.38103
TELEPHONE	AT & T TENNESSEE DON ROE (731)423-5037 315 EAST COLLEGE ST. JACKSON, TN 38301

TRAFFIC DATA

ADT (2009)	N/A

SPECIAL NOTES

PROPOSALS MAY BE REJECTED BY THE CITY OF MEMPHIS IF ANY OF THE UNIT PRICES CONTAINED THEREIN ARE OBVIOUSLY UNBALANCED, EITHER EXCESSIVE OR BELOW THE REASONABLE COST ANALYSIS VALUE.

THIS PROJECT TO BE CONSTRUCTED UNDER THE STANDARD SPECIFICATIONS OF THE TENNESSEE DEPARTMENT OF TRANSPORTATION DATED MARCH 1, 2006 AND ADDITIONAL SPECIFICATIONS AND SPECIAL PROVISIONS CONTAINED IN THE PLANS AND IN THE PROPOSAL CONTRACT

OWNER	CITY OF MEMPHIS
DESIGNER	AUSTIN CLARK
CHECKED BY	HARVEY MATHENY, PE
PROJECT NO.	PW01202
TDOT PIN NO.	112849.00
TDOT CONTACT	ARRAN ADDINGTON

PROJECT LENGTH 0.525 MILES
TOTAL LANE MILES RESURFACED 1.1 MILES

ENGINEERS SEAL

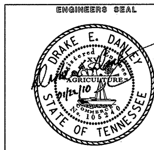

APPROVED:
CITY CIVIL DESIGN ENGINEER
DATE:
APPROVED:
CITY ENGINEER

Plotted by: Drake.Danley
k:\mem_roadway\15153000 _memphis paving\kha\STP Group 3\STP 30 - Vollintine\Cadd\Plans\STP-30-Vollintine-01.sht

TYPE	YEAR	PROJECT NO.	SHEET NO.
RESURF.	2010	STP-M-9409(132)	2

CITY OF MEMPHIS
DIVISION OF PUBLICWORKS
FILE NO.

ESTIMATED ROADWAY QUANTITIES

	ITEM NO.	DESCRIPTION	UNIT	QUANTITY
	202-03.03	REMOVAL OF ASPHALT PAVEMENT	C.Y.	213
1	303-02	MINERAL AGGREGATE, TYPE B BASE, GRADING D	TON	118
2	307-01.01	ASPHALT CONCRETE MIX (PG64-22) (BPMB-HM) GRADING A	TON	999
	403-01	BITUMINOUS MATERIAL FOR TACK COAT (TC)	TON	1
4 3	411-01.10	ASPHALT CEMENT (PG64-22) (ACS) GRADING D	TON	909
	415-01.01	COLD PLANING BITUMINOUS PAVEMENT	TON	1874
5 9	701-02.01	CONCRETE HANDICAP RAMP (RETROFIT)	SF	2720
	712-01	TRAFFIC CONTROL	LS	1
6	712-06	SIGNS (CONSTRUCTION)	SF	242
	712-04.01	FLEXIBLE DRUMS (CHANNELIZING)	EACH	20
	712-08.03	ARROW BOARD (TYPE C)	EACH	2
	716-02.01	PLASTIC PAVEMENT MARKING (4" LINE)	L.M.	0.46
7	716-02.03	PLASTIC PAVEMENT MARKING (CROSS-WALK)	L.F.	196
	716-02.05	PLASTIC PAVEMENT MARKING (STOP LINE)	L.F.	88
8	716-05.01	PAINTED PAVEMENT MARKING (4" LINE)	L.M.	0.46
	717-01	MOBILIZATION	LS	1

FOOTNOTES

1. TO BE USED IN BREAKOUT SECTION
2. INCLUDES 321 TONS FOR REPLACEMENT OF QUANTITIES REMOVED UNDER ITEM 202-03.03
3. INCLUDES 28 TONS FOR SIDE STREETS, DRIVE TURNOUTS AND SPOT LEVELING AS NEEDED
4. SEE SPECIAL PROVISION NO. 407G FOR MATERIAL TRANSFER DEVICE.
5. RETROFIT EXISTING INSTALLATION
6. QUANTITY INCLUDES:

2	ROAD WORK NEXT 0.5 MI.	(G20-1)
2	END ROAD WORK	(G20-2A)
2	UNEVEN LANES	(W8-11)
12	ROAD WORK AHEAD	(W20-1)
2	ROAD WORK 1500 FT.	(W20-1)
2	ROAD WORK 1000 FT.	(W20-1)
2	ROAD WORK 500 FT.	(W20-1)
2	ONE LANE ROAD AHEAD	(W20-4)
2	FLAGGER AHEAD	(W20-7a)
2	FRESH OIL	(W21-2)

THIS CONSTRUCTION SIGNING IS TO BE AS A MINIMUM. OTHER SIGNS AS DIRECTED BY THE ENGINEER MAY BE REQUIRED DURING DIFFERENT PHASES.

7. FOR FINAL PAVEMENT MARKING ONLY.
8. FOR TEMPORARY PAVEMENT MARKING ONLY
9. SHALL CONFORM TO CITY OF MEMPHIS STANDARD CONSTRUCTION SPECIFICATION 02770 AND 02775

ADA RAMP LOCATIONS

INTERSECTION	NE QUAD.	SE QUAD.	SW QUAD.	NW QUAD.
VOLLINTINE @ DECATUR	1	1	1	1
VOLLINTINE @ KNEY	1	1	1	1
VOLLINTINE @ BREEDLOVE	1	1	1	1
VOLLINTINE @ CROCKETT		1	1	
VOLLINTINE @ LEWIS		1	1	1
TOTALS	3	5	5	4

ENGINEERS SEAL

DRAKE E. DANLEY
Registered Engineer
AGRICULTURE
Number 10524
STATE OF TENNESSEE

CITY OF MEMPHIS
DIVISION OF PUBLIC WORKS
BUREAU OF ENGINEERING

ESTIMATED ROADWAY QUANTITIES

Plotted by: Drake.Danley
c:\mem_roadway\115153000 - memphis paving\kha\STP Group 3\STP 30 - Vollintine\Cadd\Plans\STP-30-Vollintine-02.sht

TYPE	YEAR	PROJECT NO.	SHEET NO.
RESURF.	2010	STP-M-9409(132)	3

CITY OF MEMPHIS
DIVISION OF PUBLIC WORKS
FILE NO.

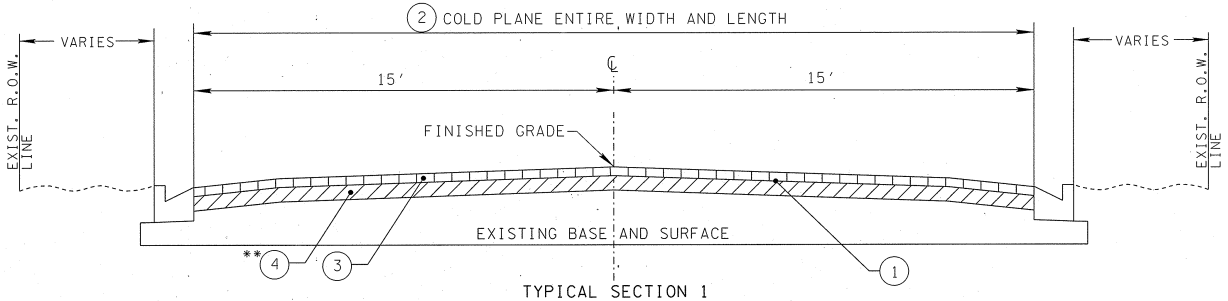

TYPICAL SECTION 1
FROM: AYERS STREET TO BREEDLOVE STREET
(SEGMENT LENGTH: ± 1550')

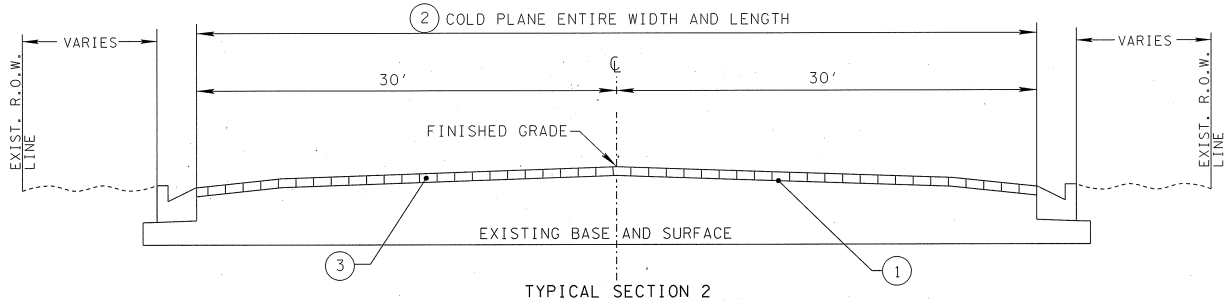

TYPICAL SECTION 2
FROM: BREEDLOVE STREET TO BELLEVUE BOULEVARD
(SEGMENT LENGTH: ± 1220')

PROPOSED PAVEMENT SCHEDULE - ALL ROADWAYS

1	**TACK COAT (TC)** ITEM 403-01 BITUMINOUS MATERIAL FOR TACK COAT (TC) (AT 0.02 GAL./S.Y.)
2*	**COLD PLANING @ 2.25" TO 3" THICK, MINIMUM (APPROX. 236.25 TO 315.00 LBS./S.Y.)** ITEM 415-01.01 COLD PLANING BITUMINOUS PAVEMENT
3	**ASPHALTIC CONCRETE SURFACE (ACS) @ 1.25" THICK (APPROX. 132.50 LBS./S.Y.)** ITEM 411-01.10 ACS MIX (PG64-22) GRADING "D"
4**	**BITUMINOUS BASE COURSE (BLACK BASE) @ 8" THICK (APPROX. 920.00 LBS./S.Y.)** ITEM 307-01.01 ASPHALT CONCRETE MIX (PG64-22) (BPMB-HM) GRADING "A"
5	**MINERAL AGGREGATE BASE @ 3" THICK FOR ROADWAY** ITEM NO. 303-02 MINERAL AGGREGATE, TYPE "B" BASE, GRADING "C OR D"

* SEE GUTTER PAN OVERLAY MILLING DETAIL TO THE RIGHT
** 2" BASE COURSE REQUIRED DUE TO ADDITIONAL MILLING DEPTH BELOW GUTTER

DETAIL OF BREAKOUT

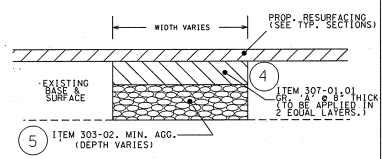

GUTTER PAN OVERLAY MILLING DETAIL

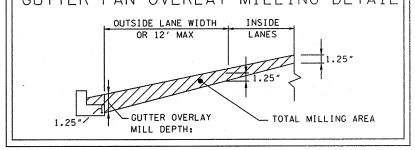

STRIPING NOTE:

TYPICAL SECTIONS MAY NOT REFLECT ADDITIONAL TURN LANES AND STRIPING CHANGES AT INTERSECTIONS OR PRIVATE DRIVES.

ENGINEERS SEAL

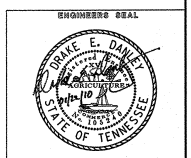

CITY OF MEMPHIS
DIVISION OF PUBLIC WORKS
BUREAU OF ENGINEERING

TYPICAL SECTIONS

STP GROUP 3 (PART 4 OF 4)

Plotted by: Drake.Danley
k:\mem_roadway\115153000 - memphis paving\kha\STP Group 3\STP 30 - Vollintine\Cadg\Plans\STP-30-Vollintine-03.sht

TYPE	YEAR	PROJECT NO.	SHEET NO.
RESURF.	2010	STP-M-9409(132)	4

CITY OF MEMPHIS

DIVISION OF PUBLIC WORKS

FILE NO.

GENERAL NOTES

GRADING

(1) ANY AREA THAT IS DISTURBED OUTSIDE LIMITS OF CONSTRUCTION DURING THE LIFE 0F THIS PROJECT SHALL BE REPAIRED BY THE CONTRACTOR AT HIS EXPENSE.

UTILITIES

(2) THE LOCATIONS OF UTILITIES SHOWN WITHIN THESE PLANS ARE APPROXIMATE ONLY. EXACT LOCATIONS SHALL BE DETERMINED IN THE FIELD BY CONTACTING THE UTILITY COMPANIES INVOLVED. NOTIFICATION BY CALLING THE TENNESSEE ONE CALL SYSTEM, INC., AT 1-800-351-1111 AS REQUIRED BY TCA 65-31-106 WILL BE REQUIRED.

(3) UNLESS OTHERWISE NOTED, ALL UTILITY ADJUSTMENTS WILL BE PERFORMED BY THE UTILITY OR IT'S REPRESENTATIVE. THE CONTRACTOR AND UTILITY OWNERS WILL BE REQUIRED TO COOPERATE WITH EACH OTHER IN ORDER TO EXPEDITE THE WORK REQUIRED BY THIS CONTRACT. ON CONTRACTS WHERE CONSTRUCTION STAKES, LINES, AND GRADES ARE CONTRACT ITEMS, THE CONTRACTOR WILL BE REQUIRED TO PROVIDE RIGHT-OF-WAY OR SLOPE STAKES, DITCH OR STREAM BED GRADES, OR OTHER ESSENTIAL SURVEY STAKING TO PREVENT CONFLICTS WITH THE HIGHWAY CONSTRUCTION. FREQUENTLY, THIS WILL BE REQUIRED AS THE FIRST ITEM OF WORK AND AT ANY LOCATION ON THE PROJECT DIRECTED BY THE ENGINEER.

(4) THE CONTRACTOR WILL PROVIDE ALL NECESSARY PROTECTIVE MEASURES TO SAFEGUARD EXISTING UTILITIES FROM DAMAGE DURING CONSTRUCTION OF THIS PROJECT. IN THE EVENT THAT SPECIAL EQUIPMENT IS REQUIRED TO WORK OVER AND AROUND THE UTILITIES, THE CONTRACTOR WILL BE REQUIRED TO FURNISH SUCH EQUIPMENT. THE COST OF PROTECTING UTILITIES FROM DAMAGE AND FURNISHING SPECIAL EQUIPMENT WILL BE INCLUDED IN THE PRICE BID FOR OTHER ITEMS OF CONSTRUCTION.

(5) PRIOR TO SUBMITTING HIS BID, THE CONTRACTOR WILL BE SOLELY RESPONSIBLE FOR CONTACTING OWNERS OF ALL AFFECTED UTILITIES IN ORDER TO DETERMINE THE EXTENT TO WHICH UTILITY RELOCATIONS AND/OR ADJUSTMENTS WILL HAVE UPON THE SCHEDULE OF WORK FOR THE PROJECT. WHILE SOME WORK MAY BE REQUIRED 'AROUND' UTILITY FACILITIES THAT WILL REMAIN IN PLACE, OTHER UTILITY FACILITIES MAY NEED TO BE ADJUSTED CONCURRENTLY WITH THE CONTRACTOR'S OPERATIONS. ADVANCE CLEAR CUTTING MAY BE REQUIRED BY THE ENGINEER AT ANY LOCATION WHERE CLEARING IS CALLED FOR IN THE SPECIFICATIONS AND CLEAR CUTTING IS NECESSARY FOR A UTILITY RELOCATION. ANY ADDITIONAL COST WILL BE INCLUDED IN THE UNIT PRICE BID FOR THE CLEARING ITEM SPECIFIED IN THE PLANS.

(6) THE CONTRACTOR SHALL NOTIFY EACH INDIVIDUAL UTILITY OWNER OF HIS PLAN OF OPERATION IN THE AREA OF THE UTILITIES. PRIOR TO COMMENCING WORK, THE CONTRACTOR SHALL CONTACT THE UTILITY OWNERS AND REQUEST THEM TO PROPERLY LOCATE THEIR RESPECTIVE UTILITY ON THE GROUND. THIS NOTIFICATION SHALL BE GIVEN AT LEAST THREE (3) BUSINESS DAYS PRIOR TO COMMENCEMENT OF OPERATIONS AROUND THE UTILITY IN ACCORDANCE WITH TCA 65-31-106.

MISCELLANEOUS

(7) ALL DETOUR, ACCESS, SERVICE AND FRONTAGE ROADS SHALL BE CONSTRUCTED WITH A MINIMUM OF ONE (1) COURSE OF BASE MATERIAL BEFORE TRAFFIC IS INTERRUPTED ON EXISTING ROADS.

(8) THE CONTRACTOR SHALL BE REQUIRED TO REMOVE AND RESET MAILBOXES WHERE AND AS DIRECTED BY THE ENGINEER.

(9) NOTHING IN THE GENERAL NOTES OR SPECIAL PROVISIONS SHALL RELIEVE THE CONTRACTOR FROM HIS RESPONSIBILITIES TOWARD THE SAFETY AND CONVENIENCE OF THE GENERAL PUBLIC AND THE RESIDENTS ALONG THE PROPOSED CONSTRUCTION AREA

PAVEMENT MARKINGS

TEMPORARY PAVEMENT MARKING ON INTERMEDIATE LAYERS

(10) TEMPORARY PAVEMENT LINE MARKINGS ON INTERMEDIATE LAYERS OF PAVEMENT SHALL BE REFLECTIVE TAPE OR REFLECTORIZED PAINT INSTALLED TO PERMANENT STANDARDS BEFORE DARK HOURS. SHORT, UNMARKED SECTIONS SHALL NOT BE ALLOWED. THESE MARKINGS WILL BE MEASURED AND PAID FOR UNDER ITEM NO. 716-05.01.

CONSTRUCTION WORK ZONE & TRAFFIC CONTROL

(11) ADVANCED WARNING SIGNS SHALL NOT BE DISPLAYED MORE THAN FORTY-EIGHT (48) HOURS BEFORE PHYSICAL CONSTRUCTION BEGINS. SIGNS MAY BE ERECTED UP TO ONE WEEK BEFORE NEEDED, IF THE SIGN FACE IS FULLY COVERED.

(12) IF THE CONTRACTOR MOVES OFF THE PROJECT, HE SHALL COVER OR REMOVE ALL UNNEEDED SIGNS AS DIRECTED BY THE ENGINEER. COSTS OF REMOVAL, COVERING, AND REINSTALLING SIGNS SHALL NOT BE MEASURED AND PAID FOR SEPARATELY, BUT ALL COSTS SHALL BE INCLUDED IN THE ORIGINAL UNIT PRICE BID FOR ITEM NO 712-06, SIGNS (CONSTRUCTION) PER SQUARE FOOT.

(13) A LONG TERM BUT SPORADIC USE WARNING SIGN, SUCH AS A FLAGGER SIGN, MAY REMAIN IN PLACE WHEN NOT REQUIRED PROVIDED THE SIGN FACE IS FULLY COVERED.

(14) TRAFFIC CONTROL DEVICES SHALL NOT BE DISPLAYED OR ERECTED UNLESS RELATED CONDITIONS ARE PRESENT NECESSITATING WARNING.

(15) ALL DETOUR AND CONSTRUCTION SIGNING SHALL BE IN STRICT ACCORDANCE WITH THE MANUAL ON UNIFORM TRAFFIC CONTROL DEVICES.

SPECIAL NOTES

(16) ALL STRIPING (PAINT) SHALL BE COMPLETED 24 HOURS AFTER OVERLAY IS COMPLETE. ALL OTHER PLASTIC PAVEMENT MARKINGS SHALL BE COMPLETE WITHIN 14 DAYS.

(17) THE ASPHALT CONCRETE SURFACE SHALL CONTAIN ALL NEW MATERIALS. USE OF RAP WILL NOT BE PERMITTED FOR SURFACE MIXES. VARIOUS STREETS IN CONTRACT SHALL BE PAVED STARTING AT THE BEGINNING OF THE PROJECT LIST AS PROVIDED IN THE PROPOSAL CONTRACT AND CONTINUE UNTIL ALL FUNDS ARE DEPLETED. IF THE CONTRACT UNDER RUNS, ADDITIONAL PROJECTS WILL BE ADDED TO THE EXISTING CONTRACT.

(18) OVERLAP EXISTING ASPHALT LONGITUDINAL JOINTS A MINIMUM OF 12". MILL ALL BRIDGE APPROACHES EQUAL TO SURFACE COURSE DEPTH.

(19) ADDITIONAL BUSHING AND CONDITIONING REQUIRED OF MILLED AREAS LEFT UNPAVED MORE THAN SEVEN (7) DAYS SHALL BE PAID FOR AT THE CONTRACTOR'S EXPENSE. THE CONTRACTOR SHALL BE REQUIRED TO PATCH STREETS AS NEEDED.

(20) UNLESS OTHERWISE DIRECTED BY ENGINEER, PERMANENT STRIPING SHALL BE REPLACED TO MATCH THE EXISTING STRIPING PRIOR TO MILLING.

(21) UNLESS OTHERWISE DIRECTED BY ENGINEER, PAVING LIMITS AT NON-SIGNALIZED INTERSECTIONS SHOULD EXTEND TO THE END OF RADIUS OF THE SIDE ROAD. AT SIGNALIZED INTERSECTIONS, THE PAVING LIMITS SHOULD EXTEND TO 50' BEYOND THE END OF RADIUS TO INCLUDE TRAFFIC SIGNAL DETECTION LOOPS.

(22) THE CONTRACTOR SHALL PROPERLY ADJUST ALL MANHOLE, ALL UTILITY VALVE STRUCTURES, AND LIKE STRUCTURES TO THE FINISHED GRADE OF THE PAVEMENT. IF EXTENSION RINGS ARE USED, ADJUSTMENT IS TO BE MADE PRIOR TO THE LAYING OF ITEM 411-01.10.ADJUSTMENT IS TO BE INCLUDED IN ITEM 411-01.10

GRADING

(23) THE CONTRACTOR SHALL NOT DISPOSE OF ANY MATERIAL EITHER ON OR OFF CITY-OWNED R.O.W. IN A REGULATORY FLOOD WAY AS DEFINED BY THE FEDERAL EMERGENCY MANAGEMENT AGENCY WITHOUT APPROVAL BY SAME. ALL MATERIAL SHALL BE DISPOSED OF IN UPLAND (NON-WETLAND) AREAS AND ABOVE ORDINARY HIGH WATER OF ANY ADJACENT WATERCOURSE. THIS DOES NOT ELIMINATE THE NEED TO OBTAIN ANY OTHER LICENSES OR PERMITS THAT MAY BE REQUIRED BY ANY OTHER FEDERAL, STATE OR LOCAL AGENCY.

HANDICAP RAMPS

(24) PAYMENT FOR HANDICAP RAMPS SHALL BE PAID WHEN ASPHALT IS IN PLACE. ASPHALT MUST BE IN PLACE AT THE HANDICAP RAMP WITHIN TWO (2) WEEKS OF RAMP INSTALLATION.

(25) ALL EXISTING CURB, GUTTER, AND SIDEWALK SHALL BE SAW CUT AND REMOVED FOR CURB RAMP CONSTRUCTION.

(26) THE CONTRACTOR SHALL NOT INCREASE PRICE DUE TO SPECIAL PROVISION REGARDING PRICE ADJUSTMENT FOR BITUMINOUS MATERIAL.

(27) CONSTRUCTION OF HANDICAP RAMPS SHALL CONFORM TO CITY OF MEMPHIS STANDARDS AND STANDARD CONSTRUCTION SPECIFICATIONS.

(28) CONTACT A.D.A. COORDINATOR AT (901)576-6907 PRIOR TO POURING CONCRETE FOR CURB RAMPS.

(29) PROVIDE 48 INCHES DISTANCE BETWEEN POLE AND ANY EDGE OF WHEEL CHAIR RAMPS.

SIGNALIZATION

(30) THE CONTRACTOR SHALL NOTIFY THE CITY OF MEMPHIS TRAFFIC DEPARTMENT (901-576-6710) AT LEAST ONE DAY IN ADVANCE OF THE COLD PLANING ACTIVITY AT SIGNALIZED INTERSECTIONS WHERE DETECTOR LOOPS ARE ON THE PAVEMENT. THE MAINTAINING AGENCY WILL THEN BE RESPONSIBLE FOR DISCONNECTING THE LOOP DETECTORS AND MAKING ANY NECESSARY TIMING ADJUSTMENTS IN THE SIGNAL CONTROLLER PRIOR TO THE CONSTRUCTION.

(31) LOOPS SHALL BE INSTALLED IN THE LEVELING COURSE IF LEVELING COURSE IS PROVIDED.

(32) LOOPS SHALL BE REPLACED IN ACCORDANCE WITH THE ORIGINAL RECORD DRAWINGS OR AS DIRECTED BT THE CITY INSPECTOR.

(33) ALL CONSTRUCTION FOR SIGNALIZATION AND SIGNALIZATION EQUIPMENT SHALL CONFORM TO CITY OF MEMPHIS STANDARD CONSTRUCTION SPECIFICATIONS.

EROSION CONTROL

(34) ALL DISTURBED AREAS SHALL BE PROPERLY STABILIZED AS SOON AS PRACTICABLE.

(35) THE CONTRACTOR SHALL ESTABLISH AND MAINTAIN A PROACTIVE METHOD TO PREVENT THE OFF-SITE MIGRATION OF DEPOSIT OF SEDIMENT ON ROADWAYS USED BY THE GENERAL PUBLIC.

TRAFFIC CONTROL

(36) SEE PAGE 6F-7 OF THE STATE OF TENNESSEE MANUAL ON UNIFORM TRAFFIC CONTROL DEVICES (MUTCD) FOR HEIGHT AND LATERAL LOCATION OF SIGNS.

(37) THE CONTRACTOR SHALL COMPLY WITH SECTION 712 OF THE STANDARD SPECIFICATIONS FOR ROAD AND BRIDGE CONSTRUCTION REGARDING TEMPORARY TRAFFIC CONTROL AND THE CURRENT EDITION OF THE MANUAL ON UNIFORM TRAFFIC CONTROL DEVICES.

(38) CONTRACTOR SHALL BE REQUIRED TO NOTIFY THE CITY OF MEMPHIS CONSTRUCTION INSPECTION DEPARTMENT (901-636-2462) AND TRAFFIC ENGINEERING DEPARTMENT (901-576-6710) A MINIMUM OF 24 HOURS PRIOR TO COMMENCING CONSTRUCTION OR IMPLEMENTING A TRAFFIC CONTROL PLAN. ALL TRAFFIC CONTROL DEVICES MUST BE IN PLACE BEFORE CONSTRUCTION ACTIVITY BEGINS.

(39) SIZES OF ALL SIGNS SHALL COMPLY WITH STATE OF TENNESSEE MANUAL ON UNIFORM TRAFFIC CONTROL DEVICES (MUTCD).

(40) ALL TRAFFIC CONTROL DEVICES AND THEIR INSTALLATION SHALL MEET THE STANDARD PRESCRIBED IN THE STATE OF TENNESSEE MANUAL ON UNIFORM TRAFFIC CONTROL DEVICES AND SHALL COMPLY WITH THE STATE OF TENNESSEE STANDARD SPECIFICATIONS FOR ROAD AND BRIDGE CONSTRUCTION SECTION 712 TEMPORARY TRAFFIC CONTROL.

(41) ACCESS TO ADJACENT PROPERTIES SHALL BE MAINTAINED AT ALL TIMES.

(42) SIDE STREET, DRIVEWAY ACCESS, AND SAFE PEDESTRIAN WAYS SHALL BE MAINTAINED AT ALL TIMES.

(43) THE CONTRACTOR SHALL NOT BE PERMITTED TO PARK ANY VEHICLES OR CONSTRUCTION EQUIPMENT DURING PERIODS OF INACTIVITY, WITHIN THIRTY (30) FEET OF THE EDGE OF PAVEMENT WHEN THE LANE IS OPEN TO TRAFFIC, UNLESS PROTECTED BY GUARDRAIL, BRIDGE RAIL, AND/OR BARRIERS INSTALLED FOR OTHER PURPOSES. PRIVATELY OWNED VEHICLES SHALL NOT BE ALLOWED TO BE PARKED WITHIN THIRTY (30) FEET OF AN OPEN TRAFFIC LANE AT ANY TIME UNLESS PROTECTED AS DESCRIBED ABOVE. WHERE THERE IS INSUFFICIENT RIGHT-OF-WAY TO PROVIDE FOR THIS THIRTY (30) FEET SETBACK, THE CONTRACTOR SHALL DETERMINE THE ALTERNATE LOCATIONS AND REQUEST THE ENGINEER'S APPROVAL TO USE THEM.

ENGINEERS SEAL

DRAKE E. DANLEY · REGISTERED ENGINEER · AGRICULTURE · COMMERCE · No. 105240 · STATE OF TENNESSEE

CITY OF MEMPHIS
DIVISION OF PUBLIC WORKS
BUREAU OF ENGINEERING

GENERAL NOTES

STP GROUP 3 (PART 4 OF 4)

Plotted by: Drake.Danley
k:\mem_roadway\115153000 - memphis paving\kha\STP Group 3\STP 30 - Vollintine\Cadd\Plans\STP-30-Vollintine-04.sht

CITY OF MEMPHIS
DIVISION OF PUBLIC WORKS
FILE NO.

(44) USE OF BARRICADES, PORTABLE BARRIER RAILS, VERTICAL PANELS, AND DRUMS SHALL BE LIMITED TO THE IMMEDIATE AREAS OF CONSTRUCTION WHERE A HAZARD IS PRESENT. THESE DEVICES SHALL NOT BE STORED ALONG THE ROADWAY WITHIN THIRTY (30) FEET OF THE EDGE OF THE TRAVELED WAY BEFORE OR AFTER USE UNLESS PROTECTED BY GUARDRAIL, BRIDGE RAIL, AND/OR BARRIERS INSTALLED FOR OTHER PURPOSES. THESE DEVICES SHALL BE REMOVED FROM THE CONSTRUCTION WORK ZONE WHEN THE ENGINEER DETERMINES THEY ARE NO LONGER NEEDED. WHERE THERE IS INSUFFICIENT RIGHT-OF-WAY TO PROVIDE FOR THIS REQUIRED SETBACK, THE CONTRACTOR SHALL DETERMINE THE ALTERNATE LOCATIONS AND REQUEST THE ENGINEER'S APPROVAL TO USE THEM.

(45) ALL SIGNS WHICH INTERFERE WITH CONSTRUCTION WILL BE RELOCATED OUTSIDE LIMITS OF CONSTRUCTION BY THE CONTRACTOR. UPON COMPLETION OF CONSTRUCTION, THE CONTRACTOR WILL RESTORE THE SIGNS TO THE ORIGINAL LOCATION. COST TO BE INCLUDED IN ITEM NO. 712-06.

(46) IF THE CONTRACTOR'S WORK PHASES REQUIRE ADDITIONAL ARROW BOARDS OTHER THAN INCLUDED WHAT ARE IN ESTIMATE, THEIR COST WILL BE INCLUDED IN THE COST OF OTHER ITEMS.

PAVEMENT EDGE DROP-OFF TRAFFIC CONTROL NOTES

(47) DIFFERENCES IN ELEVATION BETWEEN ADJACENT TRAFFIC LANES OR TRAFFIC LANE AND SHOULDER WHERE THE TRAFFIC LANE IS BEING USED BY TRAFFIC, CAUSED BY BASE, PAVING OR RESURFACING:

1. DIFFERENCES IN ELEVATION BETWEEN ADJACENT ROADWAY ELEMENTS GREATER THAN 0.75 INCH AND NOT EXCEEDING 2 INCHES:

   a. WARNING SIGNS, UNEVEN PAVEMENT (W8-11) AND/OR SHOULDER DROP-OFF (W8-9A), SHALL BE PLACED IN ADVANCE OF AND THROUGHOUT THE EXPOSED AREA. MAXIMUM SPACING BETWEEN SIGNS SHALL BE 2,000 FEET WITH A MINIMUM OF 2 SIGNS PER EXPOSED AREA. WHERE UNEVEN PAVEMENT IS ENCOUNTERED, SIGNS SHALL BE PLACED ON EACH SIDE OF THE ROADWAY.

   b. DIFFERENCES IN ELEVATION BETWEEN ADJACENT TRAFFIC LANES BEING UTILIZED BY TRAFFIC CAUSED BY ADDED PAVEMENT SHALL BE ELIMINATED WITHIN THREE WORKDAYS.

   c. DIFFERENCES IN ELEVATION BETWEEN ADJACENT TRAFFIC LANES BEING UTILIZED BY TRAFFIC CAUSED BY COLD PLANING SHALL BE ELIMINATED WITHIN THREE WORKDAYS.

   d. WHEN THE DIFFERENCE IN ELEVATION IS BETWEEN THE TRAFFIC LANE BEING UTILIZED BY TRAFFIC AND SHOULDER THE DIFFERENCE IN ELEVATION SHALL BE ELIMINATED WITHIN SEVEN WORKDAYS AFTER THE CONDITION IS CREATED.

2. DIFFERENCES IN ELEVATION BETWEEN ADJACENT ROADWAY ELEMENTS GREATER THAN 2 INCHES AND NOT EXCEEDING 6 INCHES. TRAFFIC IS NOT TO BE ALLOWED TO TRAVERSE THIS DIFFERENCE IN ELEVATION.

   a. SEPARATION SHALL BE ACCOMPLISHED BY DRUMS, BARRICADES OR OTHER APPROVED DEVICES IN ACCORDANCE WITH THE FOLLOWING:

      (1) WHERE POSTED SPEEDS ARE 50 MPH OR GREATER, SPACING OF THE PROTECTIVE DEVICES SHALL NOT EXCEED 100 FEET.

      (2) WHERE POSTED SPEEDS ARE LESS THAN 50 MPH, THE MAXIMUM SPACING OF THE PROTECTIVE DEVICES IN FEET SHALL NOT EXCEED TWICE THE POSTED SPEED IN MILES PER HOUR OR 50 FEET, WHICHEVER SPACING IS GREATER.

   b. IF THE DIFFERENCE IN ELEVATION IS ELIMINATED OR DECREASED TO 2 INCHES OR LESS BY THE END OF EACH WORKDAY, CONES MAY BE USED DURING DAYLIGHT HOURS IN LIEU OF DRUMS, BARRICADES OR OTHER APPROVED PROTECTIVE DEVICES MENTIONED IN PARAGRAPH a, PROVIDED WARNING SIGNS ARE ERECTED. WARNING SIGNS (UNEVEN PAVEMENT AND/OR LOW SHOULDER) SHALL BE PLACED IN ADVANCE OF AND THROUGHOUT THE EXPOSED AREA. MAXIMUM SPACING BETWEEN SIGNS SHALL BE 2,000 FEET WITH A MINIMUM OF 2 SIGNS PER EXPOSED AREA. WHERE UNEVEN PAVEMENT IS ENCOUNTERED, SIGNS SHALL BE PLACED ON EACH SIDE OF THE ROADWAY.

   c. WHEN THE DIFFERENCE IN ELEVATION IS BETWEEN THE THROUGH TRAFFIC LANE AND THE SHOULDER AND THE ELEVATION DIFFERENCE IS LESS THAN 3.5 INCHES, THE CONTRACTOR MAY USE WARNING SIGNS AND/OR PROTECTIVE DEVICES AS APPLICABLE AND APPROVED BY THE ENGINEER. SEE PARAGRAPH a REGARDING USE OF DRUMS, BARRICADES OR OTHER APPROVED PROTECTIVE DEVICES. WARNING SIGNS (UNEVEN PAVEMENT AND/OR LOW SHOULDER) WILL BE PLACED IN ADVANCE OF AND THROUGHOUT THE EXPOSED AREA. MAXIMUM SPACING BETWEEN SIGNS SHALL BE 2,000 FEET WITH A MINIMUM OF 2 SIGNS PER EXPOSED AREA. WHERE UNEVEN PAVEMENT IS ENCOUNTERED, SIGNS SHALL BE PLACED ON EACH SIDE OF THE ROADWAY.

IN THESE SITUATIONS, THE CONTRACTOR SHALL LIMIT HIS OPERATIONS TO ONE WORK ZONE NOT EXCEEDING 2 MILES IN LENGTH UNLESS OTHERWISE NOTED ON THE PLANS OR APPROVED BY THE ENGINEER. ONCE THE CONTRACTOR BEGINS WORK IN A WORK ZONE, A CONTINUOUS OPERATION SHALL BE MAINTAINED UNTIL THE DIFFERENCE IN ELEVATION IS ELIMINATED. SIMULTANEOUS WORK ON SEPARATE ROADWAYS OF DIVIDED HIGHWAYS WILL BE CONSIDERED INDEPENDENTLY IN REGARD TO RESTRICTION OF WORK ZONE ACTIVITY.

TYPE	YEAR	PROJECT NO.	SHEET NO.
RESURF.	2010	STP-M-9409(132)	5

ENGINEERS SEAL

CITY OF MEMPHIS
DIVISION OF PUBLIC WORKS
BUREAU OF ENGINEERING

GENERAL NOTES

Plotted by: Drake.Danley
k:\mem_rogdway\15153000 - memphis paving\kha\STP Grpup 3\STP 30 - Vollintine\Cadd\Plans\STP-30-Vollintine-05.sht