City of Memphis/Shelby County

STORM WATER MANAGEMENT MANUAL

City of Memphis Division of Public Works and Division of Engineering
Shelby County Public Works Department

Volume 1: Policy Manual
Volume 2: Drainage Manual
Volume 3: Best Management Practices Manual

Version 1
August 2006

City of Memphis&
Shelby County, TN

Storm water MATTERS!

www.stormwatermatters.com

EnSafe Inc.
5724 Summer Trees Drive
Memphis, Tennessee 38134
(901) 372-7962
www.ensafe.com

ACKNOWLEDGEMENTS

The City of Memphis and Shelby County (City and County) Best Management Practices (BMP) Manual is published and maintained by the City of Memphis Division of Public Works and the Shelby County Department of Public Works. The EnSafe team revised the City of Knoxville's BMP Manual for use by the City of Memphis and Shelby County following a series of stakeholder meetings during 2005 and 2006. The EnSafe team, the City of Memphis and Shelby County appreciate the hard work and efforts of the City of Knoxville Storm Water Engineering Division to integrate NPDES Phase 2 municipal permitting requirements and evolve the BMP manual (originally created by CDM, a member of the EnSafe team) for Tennessee's municipalities.

The Memphis/Shelby County BMP Manual was prepared under the leadership of:

City of Memphis Government

Mayor:	Dr. Willie Herenton
Public Works Director:	Jerry Collins, P.E.
City Engineer:	Wain Gaskins, P.E.

Shelby County Government

Mayor:	AC Wharton, Jr.
Public Works Director:	Theodore "Ted" Fox, P.E.
County Engineer:	Michael Oakes, P.E.

TABLE OF CONTENTS

List of Abbreviations and Acronyms viii

1.0 INTRODUCTION 1-1
- 1.1 Purpose of Best Management Practices Manual 1-1
- 1.2 Organization of BMP Manual 1-2
- 1.3 References 1-2
- 1.4 Storm Water Quantity and Quality 1-3
- 1.5 Background 1-4
- 1.6 City of Memphis Storm Water Fee 1-5
- 1.7 Erosion and Sediment Control Plan 1-5
- 1.8 Storm Water Pollution Prevention Plan 1-6
- 1.9 Post-Construction Runoff Control Plan 1-6

2.0 EROSION AND SEDIMENT CONTROL 2-1
- 2.1 Erosion Process 2-1
- 2.2 Overland Erosion 2-2
- 2.3 Stream and Channel Erosion 2-3
- 2.4 Dust Control 2-4
- 2.5 Factors Influencing Erosion 2-4
- 2.6 Sedimentation Process 2-6

3.0 STORM WATER POLLUTANTS 3-1
- 3.1 Sediments 3-2
- 3.2 Nutrients 3-9
- 3.3 Heavy Metals 3-9
- 3.4 Toxic Materials 3-9
- 3.5 Oil and Grease 3-10
- 3.6 Bacteria and Viruses 3-10
- 3.7 Oxygen-Demanding Substances 3-11
- 3.8 Floatable Materials 3-11
- 3.9 Construction Waste 3-12

4.0 SELECTING BEST MANAGEMENT PRACTICES 4-1
- 4.1 Construction Versus Post-Construction BMPs 4-1
- 4.2 Identify Objectives 4-2
- 4.3 Select BMPs 4-4
- 4.4 Factors for Construction Sites 4-6
- 4.5 Storm Water Treatment Removal Goals 4-7

5.0 EROSION AND SEDIMENT CONTROL PLANS 5-1
- 5.1 Overall Requirements 5-1
  - 5.1.1 TDEC Requirements 5-1
  - 5.1.2 City/County Requirements 5-2
- 5.2 Minimize Disturbed Areas 5-2
- 5.3 Site Perimeter Controls 5-3
- 5.4 Internal Erosion and Drainage Design 5-4
- 5.5 Inspection and Maintenance 5-5
- 5.6 ESCP Preparation Guidance 5-6

6.0 STORM WATER POLLUTION PREVENTION PLAN 6-1
6.1 Memphis and Shelby County Requirements 6-1
6.2 Phase 1: Site Evaluation 6-2
6.3 Phase 2: Planning and Design 6-3
6.4 Phase 3: Implementation and Monitoring 6-4
6.5 SWPPP Preparation Guidance 6-5

7.0 POST-CONSTRUCTION RUNOFF CONTROL 7-1

8.0 LIST OF RELATED WEB SITES 8-1
8.1 Web Sites for the City of Memphis and Shelby County 8-1
8.2 Web Sites for the State of Tennessee Government 8-2
8.3 Web Sites for the United States Government 8-4
8.4 Miscellaneous Web Sites 8-6

9.0 GLOSSARY OF TERMS 9-1

10.0 LIST OF REFERENCES 10-1

List of Figures

Figure 4-1 BMP Treatment Options 4-5
Figure 4-2 Pollutant Removal for Dry Detention Basins 4-9

List of Tables

Table 1-1 Legislation of Storm Water in Memphis and Shelby County 1-3
Table 3-1 Activities & Methods BMPs Pollutant Removal Matrix 3-3
Table 3-2 Erosion & Sediment BMPs Pollutant Removal Matrix 3-4
Table 3-3 Industrial & Commercial BMPs Pollutant Removal Matrix 3-6
Table 3-4 Residential & Homeowners BMPs Pollutant Removal Matrix 3-7
Table 3-5 Storm Water Treatment BMPs Pollutant Removal Matrix 3-8
Table 4-1 Representative Rainfall Statistics for Zone 2 4-8
Table 4-2 Percentage of Capture for Average Annual Storm Water Runoff 4-8
Table 4-3 Typical Pollutants for Highways and Streets 4-10
Table 4-4 Pollutant Concentration in Urban Runofff for Annual Exceedance Frequencies 4-11
Table 4-5 Comparative pollutant Removal Percentages of Urban BMP Designs 4-11

List of BMP Appendices

ACTIVITIES AND METHODS

AM-01 Activity: Employee Training AM-01-1
AM-02 Activity: Construction Scheduling AM-02-1
AM-03 Activity: Preservation of Existing Vegetation AM-03-1
AM-04 Activity: Maintenance of Existing Drainage Systems AM-04-1
AM-05 Activity: Storm Drainage System Flushing AM-05-1
AM-06 Activity: Material Delivery and Storage AM-06-1
AM-07 Activity: Spill Prevention and Control AM-07-1
AM-08 Activity: Waste Management and Recycling AM-08-1
AM-09 Activity: Sanitary and Septic Waste Management AM-09-1
AM-10 Activity: Contaminated Soil Management AM-10-1
AM-11 Activity: Dust Control AM-11-1
AM-12 Activity: Dewatering Operations AM-12-1
AM-13 Activity: Pesticides, Herbicides, and Fertilizer Use AM-13-1
AM-14 Activity: Vehicle and Equipment Cleaning AM-14-1
AM-15 Activity: Vehicle and Equipment Fueling AM-15-1
AM-16 Activity: Vehicle and Equipment Maintenance and Repair AM-16-1
AM-17 Activity: Paving and Grinding Operations AM-17-1
AM-18 Activity: Concrete Waste Management AM-18-1
AM-19 Activity: Structure Construction and Painting AM-19-1

EROSION AND SEDIMENT

ES-01 Activity: Stabilized Construction Access ES-01-1
ES-02 Activity: Tire Washrack ES-02-1
ES-03 Activity: Construction Road Stabilization ES-03-1
ES-04 Activity: Gradient Terraces and Silt Trenches ES-04-1
ES-05 Activity: Surface Roughening ES-05-1
ES-06 Activity: Topsoil ES-06-1
ES-07 Activity: Mulch ES-07-1
ES-08 Activity: Seeding ES-08-1
ES-09 Activity: Sodding ES-09-1
ES-10 Activity: Trees, Shrubs, and Vines ES-10-1
ES-11 Activity: Erosion Control Blankets and Mats ES-11-1
ES-12 Activity: Geotextiles ES-12-1
ES-13 Activity: Check Dams ES-13-1
ES-14 Activity: Silt Fence ES-14-1
ES-15 Activity: Straw Bale Barrier ES-15-1
ES-16 Activity: Sandbag Barrier ES-16-1
ES-17 Activity: Brush or Rock Filter Berm ES-17-1
ES-18 Activity: Temporary Sediment Trap ES-18-1
ES-19 Activity: Sediment Basin ES-19-1
ES-20 Activity: Bank Stabilization and Soil Bioengineering ES-20-1
ES-21 Activity: Diversions and Downdrains ES-21-1
ES-22 Activity: Channel Linings ES-22-1
ES-23 Activity: Riprap ES-23-1
ES-24 Activity: Temporary Inlet Protection ES-24-1
ES-25 Activity: Outlet Protection ES-25-1
ES-26 Activity: Level Spreader ES-26-1

ES-27 Activity: Floating Sediment Curtain ES-27-1
ES-28 Activity: Gabions ES-28-1
ES-29 Activity: TDOT Standard Details for Erosion Control ES-29-1
ES-30 Activity: TDEC Erosion and Sediment Control BMPs ES-30-1

INDUSTRIAL AND COMMERCIAL

IC-01 Activity: Non-Storm-Water Discharges to Storm Drains IC-01-1
IC-02 Activity: Outdoor Loading and Unloading of Materials IC-02-1
IC-03 Activity: Outdoor Container Storage of Liquid Materials IC-03-1
IC-04 Activity: Outdoor Process Equipment Operations IC-04-1
IC-05 Activity: Grounds Construction and Maintenance IC-05-1
IC-06 Activity: Over-Water Operations IC-06-1
IC-07 Activity: Food Service and Handling IC-07-1
IC-08 Activity: Power or Pressure Washing IC-08-1
IC-09 Activity: Swimming Pools and Spas IC-09-1
IC-10 Activity: Dumpsters IC-10-1
IC-11 Activity: Kitchen Exhaust Cleaning IC-11-1
IC-12 Activity: Air Conditioners and Refrigerators IC-12-1
IC-13 Activity: Farms and Agricultural Land IC-13-1
IC-14 Activity: Response to Sanitary Sewer Overflows IC-14-1

RESIDENTIAL AND HOME OWNERS

RH-01 Activity: Non-Storm-Water Discharges to Storm Drains RH-01-1
RH-02 Activity: Vehicle Washing RH-02-1
RH-03 Activity: Vehicle Maintenance and Repairs RH-03-1
RH-04 Activity: Landscape Irrigation and Lawn Watering RH-04-1
RH-05 Activity: Pesticides and Fertilizers RH-05-1
RH-06 Activity: Household Solid and Hazardous Waste Management RH-06-1
RH-07 Activity: Sanitary Sewer Laterals and Septic Tanks RH-07-1
RH-08 Activity: Pet and Animal Wastes RH-08-1
RH-09 Activity: Slope and Stream Bank Stabilization RH-09-1
RH-10 Activity: Swimming Pools and Spas RH-10-1
RH-11 Activity: Boating and Marinas RH-11-1
RH-12 Activity: Tips for Wet Basements and Crawl Spaces RH-12-1

STORM WATER TREATMENT

ST-01 Activity: Dry Detention Basin ST-01-1
ST-02 Activity: Wet Detention Basin ST-02-1
ST-03 Activity: Infiltration Systems and Methods ST-03-1
ST-04 Activity: Constructed Wetlands ST-04-1
ST-05 Activity: Filter Strips and Swales ST-05-1
ST-06 Activity: Water Quality Inlets and Media Filtration Inlets ST-06-1
ST-07 Activity: Oil-Water Separator ST-07-1
ST-08 Activity: Underground Detention ST-08-1
ST-09 Activity: Multiple Systems ST-09-1

List of Figures for the BMP Appendices

Figure AM-03-1 Typical Tree Well Section AM-03-9
Figure AM-03-2 Typical Drainage Pipe Layout AM-03-10
Figure AM-12-1 Typical Filter Box AM-12-6
Figure AM-12-2 Typical Portable Sediment Tank AM-12-7
Figure AM-14-1 Construction Vehicle and Equipment Cleaning Area AM-14-5
Figure AM-15-1 Typical Layout — Retail Gasoline Stations AM-15-5

Figure ES-01-1 Stabilized Construction Entrance ES-01-4
Figure ES-02-1 Typical Washrack for Construction Access Area ES-02-3
Figure ES-03-1 Temporary Stream Crossing — Bridge ES-03-4
Figure ES-03-2 Temporary Stream Crossing — Culverts ES-03-5
Figure ES-04-1 Furrow Layout ES-04-5
Figure ES-04-2 Serrated Slope Layout ES-04-6
Figure ES-04-3 Stepped Slopes and Terraced Slopes ES-04-7
Figure ES-05-1 Surface Roughening — Equipment Tracking ES-05-3
Figure ES-10-1 Typical Planting Detail — Shrub or Vine ES-10-6
Figure ES-10-2 Typical Planting Detail — Tree ES-10-7
Figure ES-11-1 Typical Anchoring Details for Erosion Control Matting ES-11-7
Figure ES-12-1 Anchoring Geotextiles in Channels ES-12-8
Figure ES-12-2 Anchoring Geotextiles on Embankments ES-12-9
Figure ES-12-3 Fiber Roll Installation ES-12-10
Figure ES-13-1 Rock Check Dams ES-13-4
Figure ES-14-1 Typical Silt Fence Installation ES-14-6
Figure ES-14-2 Triangular Silt Fence ES-14-7
Figure ES-14-3 Silt Fence (Below a Steep or Long Slope) ES-14-8
Figure ES 14-4 Silt Fence (Small Ditch or Swale Only) ES-14-8
Figure ES-15-1 Straw Bale Barrier ES-15-5
Figure ES-16-1 Sandbag Barrier ES-16-4
Figure ES-17-1 Rock Filter Berm ES-17-5
Figure ES-17-2 Brush Filter Berm ES-17-6
Figure ES-18-1 Temporary Sediment Trap — Overflow ES-18-7
Figure ES-18-2 Temporary Sediment Trap — Rock Outlet ES-18-8
Figure ES-18-3 Temporary Sediment Trap — Combination Outlet ES-18-9
Figure ES-19-1 Typical Sediment Basin ES-19-10
Figure ES-19-2 Temporary Sediment Basin — Riser and Pipe Outlet ES-19-11
Figure ES-19-3 Possible Alterations to Permanent Detention Basin Outlet Structures ES-19-12
Figure ES-20-1 Live Fascine Details ES-20-9
Figure ES-20-2 Branch Packing Details ES-20-10
Figure ES-20-3 Vegetated Cribwall ES-20-11
Figure ES-20-4 Vegetated Rock Gabion ES-20-12
Figure ES-20-5 Vegetated Rock Wall ES-20-13
Figure ES-21-1 Typical Diversions ES-21-5
Figure ES-21-2 Typical Downdrain Details ES-21-6
Figure ES-22-1 Basic Flow Computation — Manning's Equation ES-22-3
Figure ES-22-2 Manning's Roughness Coefficient — Grass Channels ES-22-9
Figure ES-23-1 Angle of Repose for Riprap Based on Average ES-23-6
Figure ES-23-2 Distribution of Boundary Shear for Trapezoidal ES-23-7

Figure ES-23-3 Base of Riprap Slope Protection ES-23-12
Figure ES-24-1 Inlet Protection — Block and Gravel ES-24-5
Figure ES-24-2 Inlet Protection — Sandbag Barrier ES-24-6
Figure ES-24-3 Inlet Protection — Wire Mesh and Gravel ES-24-7
Figure ES-24-4 Inlet Protection — Excavated Impoundment ES-24-7
Figure ES-24-5 Inlet Protection — Geotextile Filter Bag ES-24-8
Figure ES-25-1 Riprap Outlet Protection ES-25-5
Figure ES-25-2 Various Energy Dissipaters and Stilling Basins ES-25-7
Figure ES-26-1 Level Spreaders ES-26-3
Figure ES-27-1 Floating Sediment Curtain ES-27-4
Figure ES-28-1 Typical Gabion Wall Geometry ES-28-2

Figure IC-10-1 Hydraulically Activated Wash Water Diversion System IC-10-5
Figure IC-10-2 Automated Wash Water Diversion System IC-10-5

Figure RH-12-1 Typical Paths of Water and Moisture Entering Into a Crawl Space Area RH-12-4
Figure RH-12-2 Correct Installation of Downspout Shoe and Splash Block at Foundation Wall RH-12-5
Figure RH-12-3 Correction of Typical Slope Drainage Problem Using Swale or Ditch RH-12-6

Figure ST-01-1 Typical Dry Detention Basin Layout ST-01-9
Figure ST-01-2 Typical Outlet Structure ST-01-10
Figure ST-01-3 Outlet Structure — Alternative A ST-01-11
Figure ST-01-4 Outlet Structure — Alternative B ST-01-11
Figure ST-01-5 Typical Detail — Backslope Drain ST-01-12
Figure ST-02-1 Schematic of Wet Detention Basin ST-02-10
Figure ST-02-2 Typical Wet Detention Basin Layout ST-02-11
Figure ST-02-3 Typical Outlet Structure ST-02-12
Figure ST-02-4 Outlet Structure — Alternative A ST-02-13
Figure ST-02-5 Outlet Structure — Alternative B ST-02-13
Figure ST-03-1 Typical Infiltration Basin ST-03-10
Figure ST-03-2 Typical Infiltration Trench (with Surface Drainage) ST-03-11
Figure ST-03-3 Typical Infiltration Trench (with Rooftop Drainage) ST-03-11
Figure ST-03-4 Typical Drywell (with Rooftop Drainage) ST-03-12
Figure ST-03-5 Examples of Porous Pavement ST-03-12
Figure ST-04-1 Typical Wetlands Layout ST-04-9
Figure ST-04-2 Typical Flow Patterns ST-04-10
Figure ST-04-3 Typical Outlet Structure ST-04-10
Figure ST-05-1 TSS Removal Efficiency for Grass Swales and Filters ST-05-5
Figure ST-05-2 Examples of Filter Strips and Swales ST-05-7
Figure ST-05-3 Characteristics of Various Types of Grass ST-05-8
Figure ST-06-1 Typical Storm Water High-Flow Bypass Manhole ST-06-9
Figure ST-06-2 Modified Catch Basin ST-06-9
Figure ST-06-3 Surface Sand Filter ST-06-10
Figure ST-06-4 Storm Filer (Media Cartridge) ST-06-10
Figure ST-06-5 Delaware Sand Filter ST-06-11
Figure ST-06-6 Underground Sand Filter ST-06-11
Figure ST-06-7 Typical Grate Inlet Filter (With Filter Trays) ST-06-12
Figure ST-06-8 Typical Grate Inlet Filter (with Sorbent Material) ST-06-12

Figure ST-06-9 Clog-Resistant Media Filtration Inlets ST-06-13
Figure ST-07-1 Typical Oil-Water Separators ST-07-9
Figure ST-07-2 Typical Size and Volume Distribution of Oil Droplets ST-07-10
Figure ST-07-3 Typical Storm Water High-Flow Bypass Manhole ST-07-10
Figure ST-07-4 Conventional Oil-Water Separator ST-07-11
Figure ST-07-5 Typical Detail for Swirl Oil-Water Separators ST-07-12
Figure ST-07-6 Flow Schematic for Continuous Deflection Separators ST-07-12
Figure ST-07-7 Oil-Water Separator (Stormceptor) ST-07-13
Figure ST-07-8 Oil-Water Separator (Downstream Defender) ST-07-13
Figure ST-07-9 Flow Schematic for Dual Tank System ST-07-14
Figure ST-09-1 Multiple Systems for Storm Water Treatment BMPs ST-09-4

List of Tables for the BMP Appendices

Table AM-01-1 Quick Reference for Disposal Alternatives AM-01-6
Table AM-03-1 Section 33 — [Tree Removal] (Joint Tree Ordinance No. 235, Sections 1 to 9, February 26, 2001) AM-03-11
Table AM-07-1 Immediate Response Procedures On-Scene Personnel AM-07-6
Emergency Telephone Numbers AM-07-7
Table AM-07-2 Notification Requirements AM-07-9
Table AM-11-1 BMPs for Dust Control AM-11-5
Table AM-11-2 Commonly Used Chemicals for Dust Control AM-11-6

Table ES-06-1 Typical Amount of Lime Required for Grass Seeding ES-06-3
Table ES-08-1 Temporary Seed Mixtures ES-08-6
Table ES-08-2 Permanent Seed Mixtures ES-08-6
Table ES-09-1 Comparison of Seeding and Sodding ES-09-4
Table ES-10-1 Approved Plant List ES-10-8
Tree A: Trees over 50' Tall ES-10-8
Tree B: Trees 30' to 50' Tall ES10-9
Tree C: Trees Less than 30' Tall ES-10-9
Tree D: Evergreen Trees over 30' Tall (Evergreen Trees for Screening) (Variety of Evergreen Trees is Encouraged) ES-10-10
Tree E: Evergreen Trees Less than 30' Tall ES-10-10
Table ES-22-1 Manning's Roughness Coefficient — Channels ES-22-5
Table ES-22-2 Manning's Roughness Coefficient — Natural Channels ES-22-6
Table ES-22-3 Retardance Classifications for Grass Channels ES-22-7
Table ES-22-4 Permissible Velocities ES-22-10
Table ES-23-1 Machined Riprap Specifications ES-23-3
Table ES-23-2 Hand-Placed Riprap Specifications ES-23-3
Table ES-23-3 Non-Machined Riprap Specifications ES-23-4
Table ES-23-4 Weight and Size Equivalents of Riprap ES-23-11
Table ES-25-1 Selecting Riprap Apron Length (L_A) and Riprap Median Size (D_{50}) ES-25-6

Table ST-03-1 Typical Infiltration Rates from USDA Soil Texture ST-03-4
Table ST-03-2 Comparative Evaluations of Potential Infiltration Sites ST-03-5
Table ST-04-1 Size Criteria for Storm Water Wetlands ST-04-3

LIST OF ABBREVIATIONS AND ACRONYMS

BMP	Best Management Practice
BOD	Biochemical Oxygen Demand
CFR	Code of Federal Register
COD	Chemical Oxygen Demand
DO	Dissolved Oxygen
ESCP	Erosion and Sediment Control Plan
MEP	Maximum Extent Practicable
MSDS	Material Safety Data Sheet
MS4	Municipal Separate Storm Sewer System
NOI	Notice of Intent
NPDES	National Pollutant Discharge Elimination System
NRCS	National Resources Conservation Service
O&M	Operations & Maintenance
RUSLE	Revised Universal Soil Loss Equation
SWMM	Storm Water Management Manual (Volume 1: Policy Manual, Volume 2: Drainage Manual, Volume 3: Best Management Practices Manual)
SWPPP	Storm Water Pollution Prevention Plan
TDEC	Tennessee Department of Environment and Conservation
TDOT	Tennessee Department of Transportation
TR-55	Technical Release 55 (June 1986, SCS, see reference 175)
TSS	Total Suspended Solids
USEPA	United States Environmental Protection Agency
USGS	United States Geological Survey
UT	University of Tennessee

Abbreviations for units that are commonly used throughout the BMP Manual:

ac	Acres	Area
ac-ft	Acre-feet	Volume
cfs	Cubic feet per second	Flow
fps	Feet per second	Velocity
ft	Feet	Length
gpm	Gallons per minute	Flow
mg/L	Milligrams per liter	
µg/L	Micrograms per liter	Concentration
ppm	Parts per million	Concentration
sf	Square feet	Area
sq.mi.	Square miles	Area
°F	Degrees Fahrenheit	Temperature

1.0 INTRODUCTION

1.1 Purpose of Best Management Practices Manual

In 2006, the City of Memphis and Shelby County produced the Storm Water Management Manual (SWMM), which comprises the following volumes:

Volume 1 — Policy Manual
Volume 2 — Drainage Manual
Volume 3 — Best Management Practices (BMP) Manual

The purpose of the Best Management Practices (BMP) Manual is to establish minimum standards for the design and implementation of measures to prevent and control erosion, sediment, and other forms of storm water pollution. The BMP Manual is intended primarily to assist developers, engineers, contractors, inspectors, and property owners in the selection and use of BMPs for the design of new facilities. However, most of the BMPs can also be installed on an existing site or facility to improve the environmental quality of storm water.

It is important to realize that most BMPs are applicable to every type of land use (residential, commercial, industrial, and institutional) because it is everyone's responsibility to protect water resources. Therefore, it is important to look through all categories of BMPs to ensure that the most effective measures are selected.

The water quality of all of the major streams in Memphis and unincorporated Shelby County is limited due to siltation. To minimize storm water quality impacts, onsite storm water quality management practices are needed for all developments subject to review by the Memphis and/or Shelby County.

The extent and type of management practices implemented must be proportionate to the land use, pollutant discharge potential, and proximity to regional storm water quality management practices. Memphis and Shelby County encourage the implementation of a series of best management practices that optimize the use of required green and open spaces, especially along buildings and within or along parking lots. The storm water controls must be designed to limit the discharge of storm water pollutants offsite to those of predevelopment levels to the maximum extent practicable (MEP). Due to colloidal clay soils in the Memphis area, sediment removal BMPs may not yield clear storm water. The MEP for sediment removal in the Memphis area is to design and implement BMPs as indicated in the BMP Manual.

1.2 Organization of BMP Manual

The BMP Manual includes a brief introduction to storm water BMPs, the theory of erosion control, the steps in selecting which BMPs to use, and a series of focused and concise fact sheets for each type of BMP to be used in the City of Memphis and unincorporated Shelby County.

The fact sheets are categorized so that they may be used as quick references or for detailed design, inspection, and maintenance guidance. In this way, the fact sheets are designed to be stand-alone documents that may be distributed to facilitate focused discussion about each practice. The initial August 2006 publication of the BMP manual does not include any version number on BMP fact sheets. Subsequent publications will utilize version numbers to allow easy identification of the latest version of each BMP. It is common to categorize BMPs as either structural or nonstructural, depending upon whether there is a physical control or a management approach to reducing pollution. However, in this manual, BMPs are categorized as:

AM	Activities and Methods
ES	Erosion and Sediment
IC	Industrial and Commercial
RH	Residential and Homeowners
ST	Storm Water Treatment

Most practices listed as **AM** are nonstructural practices, which are activities performed in an attentive way with storm water quality in mind. Practices listed as **ES** or **ST** in the BMP Manual are mainly structural practices that involve installation or construction of a physical barrier or device to accomplish pollution reduction.

The BMPs listed under **AM** are generally applicable to all types of existing land uses, such as commercial establishments, industries, residences, institutions, or churches. Likewise, the BMPs listed under **IC** will apply to many properties other than industries or commercial facilities that involve material storage and handling, routine maintenance and repair, or waste disposal. The BMPs listed under **RH** are intended to help homeowners and owners/managers of other residential properties prevent pollution impacts.

1.3 References

The BMP fact sheets refer to the list of references by using the reference numbers only. In each case, it is the intention of Memphis and Shelby County to give appropriate credit whenever possible.

1.4 Storm Water Quantity and Quality

Historically, Memphis and Shelby County (City and County) have been addressing storm water quantity (drainage and flooding) through ordinances, which are approved by City Council and the County Commission. Storm water quantity management via the ordinances involved controlling the volume and flow rate of runoff from larger storm events.

Table 1-1 summarizes the legislation of storm water in the City and the County.

Table 1-1
Legislation of Storm Water in Memphis and Shelby County

Storm Water Regulations and Guidance Documents	City of Memphis	Shelby County
Joint Floodway Ordinance Special Use	Joint Ordinance No. 11 October 1980 (Codified in Section 25, FW of the Zoning Ordinances)	
Memphis Storm Water Drainage Manual	1987 (Revised 1990 and again revised 2006 and incorporated into the SWMM)	
Phase 1 National Pollutant Discharge Elimination System (NPDES) Storm Water Ordinance	Ordinance No. 4538 (January 1997)	Not Applicable
Joint Tree Ordinance	Ordinance 21 September 2001 (Codified in Section 33 of the Zoning Ordinances)	
Fletcher Creek Drainage Basin Zoning Ordinance	Joint Ordinance No. 5007 September 2003	
Phase 2 NPDES Storm Water Ordinance	Not Applicable	Ordinance No. 292 (December 2004)
Post-construction Runoff Control Technical Standards	2006 SWMM (originally issued as an Interim Guidance Document in September 2005)	
Construction Activity and Erosion and Sediment Control Storm Water Ordinance Revisions	Ordinance No. 5116 (August 2005)	Not Applicable
Storm Water Enterprise Fund	Ordinance No. 5135 and 5157 (December 2005 and May 2006)	Not Applicable
Storm Water Enterprise Fund Fee Adjustment and Credit Manual	January 2006	Not Applicable
Shelby County Code, Appendix A — Zoning	Adopted October 6, 1980 (Section 9 Landfill Floodplain Restrictions, Section 25 Floodway Special Purpose Districts, Section 26 Floodplain Overlay Regulations, Section 33 Tree Removal)	
Shelby County Code, Appendix B — Subdivisions	Adopted on December 19, 1983, as amended through January 8, 1990 (Section 301.3 — Preliminary plan requirements that plans indicate the floodplain and floodway boundaries, methods for accommodating drainage, and special requirements for subdivisions located in the floodplain or in the Fletcher Creek Drainage Basin; Section 301.7 — Final plat requirements for base flood elevations and added requirements for Fletcher Creek Drainage Basin; Section 501 — General provisions for improvements include requirements for construction plan submittal detailing drainage to Public Works; Section 503.3 — requires curbs and gutters for all urban subdivisions; Section 504 Drainage — requires the developer to provide easements, improve ditches, or pay a fee in lieu of improving ditches. Section 506 — Soil erosion plan submittal requirements.	

The BMP Manual helps to place new emphasis on storm water quality. The Tennessee Department of Environment and Conservation (TDEC), the City, and the County are now requiring that storm water quality management techniques be applied to new development and significant redevelopment in the form of structural and nonstructural BMPs. Storm water quality management involves pollutant control, capture, and/or treatment of storm water. Some of the pollutants are referred to as "point sources," which means that there is a recognizable source such as regulated discharges, accidental spills, illegal dumping, or illicit connections. The BMP Manual also includes some discussion on minimizing unregulated point sources, but primarily focuses on nonpoint source pollution.

Nonpoint source pollution results from particulates or dissolved pollutant matter being transported by runoff over surfaces and conveyed to the storm drain system, streams, and other waterways. Nonpoint source pollution principally includes sediment eroded from denuded areas during construction and pollutants from impervious surfaces, which can be easily transported or conveyed.

Nonpoint source pollution is most prevalent in runoff from frequent storm events that are smaller than design storm events used in sizing storm drainage structures. Typically, these events have less than 1 inch of rainfall. This is the rainfall amount generally considered in preparing the selection, size, approach, and maintenance criteria presented in the BMP fact sheets. During dry weather as well as during precipitation events, all BMPs must be carefully followed to ensure continued performance.

1.5 Background

The City and County, like many other municipalities across the United States, are required to have a National Pollutant Discharge Elimination System (NPDES) permit to discharge storm water from the municipal separate storm sewer system (MS4). The City of Memphis was issued a storm water permit by the State of Tennessee as a Phase 1 municipality on May 31, 1996. Shelby County was issued a storm water permit as a Phase 2 municipality on February 27, 2003. Because development activities may significantly contribute to the discharge of pollutants, the City and County NPDES permits require the municipalities to encourage, promote, and require implementation of certain practices and procedures for the purpose of reducing or limiting discharge of pollutants to storm water channels.

To accomplish this goal, the City and County have ordinances and standards, which require BMP implementation and inspections as part of land development activities. Some of these ordinances and standards have been developed and adopted specifically to address storm water

quality concerns, while others were originally developed to address other concerns, but are also effective in promoting improved storm water quality in development activities. Development of a BMP Manual was required by NPDES Permit No. TNS068276 for the City of Memphis and NPDES Permit No. TNS075663 for Shelby County. Both permits will expire in 2008.

1.6 City of Memphis Storm Water Fee

In December 2005, the Memphis City Council approved the implementation of a monthly storm water fee. The fee, based on units of 3,147 square feet, will be applied to all users or owners of property with "impervious area" located within the City of Memphis. As part of NPDES Permit requirement to "encourage water quality," a Fee Adjustment and Credit Manual was issued by the City of Memphis in January 2006 to provide adjustments and credits against the user's storm water fee as a financial incentive to implement structural and nonstructural BMPs. The manual is available at www.stormwatermatters.com.

1.7 Erosion and Sediment Control Plan

Memphis and Shelby County require that an Erosion and Sediment Control Plan (ESCP) be submitted for most types of development. This plan should incorporate common erosion control BMPs (such as those in the ES section of this BMP Manual). The erosion control BMPs are intended to expand upon commonly used documents such as the Tennessee Erosion and Sediment Control Handbook (2nd Edition reissued in March 2002), which is available on the TDEC web site.

Laws regarding erosion and sediment control are somewhat flexible and performance oriented. The property owner and developer shall choose methods and means necessary to prevent or reduce erosion and to control the amount of sediment leaving the site. A combination of structural control measures and nonstructural management practices generally will be the most cost-effective method to control erosion and sediment. The erosion process is described in detail in Chapter 2 and measures should be taken to reduce erosion and sediment at each step in the process.

The overall requirements of an ESCP are described in Chapter 5. In addition, typical checklists to review plan submittals are included. The use of checklists prior to plan review submittals will standardize the format for developers, engineers, contractors, inspectors, and owners.

1.8 Storm Water Pollution Prevention Plan

Memphis and Shelby County may require a Storm Water Pollution Prevention Plan (SWPPP), even if not required by TDEC. Guidance in preparing a SWPPP to be submitted to the City of Memphis and Shelby County is given in Chapter 6.

TDEC's General NPDES Permit for Discharges of Storm Water Associated with Construction Activities (Permit No. TNR100000) requires a SWPPP for all construction sites that disturb 1 or more acres of land. TDEC's General Permit for Discharges Associated with Industrial Activity (Permit No. TNR050000) also requires a SWPPP for industrial activity with the potential to pollute waters of the state. See the TDEC web site listed in Chapter 8 for additional information on these two general statewide permits and how to obtain coverage.

As part of the process of obtaining coverage under one of these statewide permits, a Notice of Intent (NOI) is required to be filed with Memphis and/or Shelby County within 60 days of permit issuance.

1.9 Post-Construction Runoff Control Plan

Memphis and Shelby County Engineering Departments require the submittal of a Post construction Runoff Control (PCRC) Plan for all new developments and significant redevelopment sites that disturb 1 acre or more, including projects less than 1 acre that are part of a larger common plan of development or sale and that discharge into the Memphis and/or Shelby County MS4. The PCRC Plan is to be included with the plan set provided to Memphis and/or Shelby County. The PCRC Plan shall be signed and sealed by a Tennessee Registered Professional Engineer. Further guidance on preparing a PCRC Plan is given in Chapter 7.

2.0 EROSION AND SEDIMENT CONTROL

Shelby County typically has heavy precipitation in the winter and early spring caused by low-pressure systems resulting in widespread rains. A second period of heavy precipitation occurs in spring and early summer, when local showers and thunderstorms are more common. Precipitation is generally lightest in the late summer and early fall.

Soils in the Shelby County are typically characterized as nearly level to gently sloping, well-drained, and silty. However, there are a variety of soil types in Memphis and Shelby County and each site should be assessed by consulting the Shelby County soil survey and by conducting a site-specific evaluation. Silt deposits range from 5 to more than 20 feet thick. Often, a fragipan (caused by agricultural use) begins at a depth of 15 to 30 inches and needs to be broken to increase infiltration. Top soils are underlain by a layer of aeolian loess consisting of silt, clay, and silty clay. The thickness of the loess varies from location to location (Chapter 10, Reference 202).

In general, soils in Shelby County are susceptible to high rates of erosion and require careful management. The silt and silty clay soils in Shelby County are infamous for their colloidal properties, which do not filter or settle well.

One of the main tools available to help land users determine the potentials and limitations of soils is a soil survey. Soil surveys are available through the U.S. Department of Agriculture (USDA), Natural Resources Conservation Service (NRCS). The surveys are made by NRCS in cooperation with other federal, state, and local agencies. The Shelby County soil survey is available on the internet at http://websoilsurvey.nrcs.usda.gov/app/. The Web Soil Survey program on the NRCS web site allows the user to produce a customized soil survey for a site. Detailed information about limitations for specific soils should be evaluated.

2.1 Erosion Process

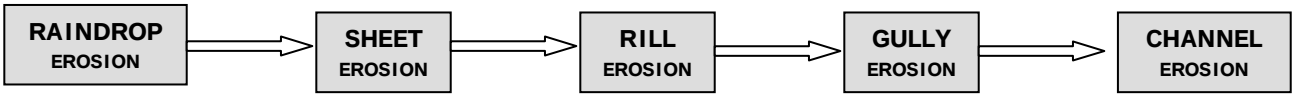

Short-term storm water quality management predominantly focuses on erosion and sediment control for construction sites. However, erosion may occur on any site, even fully developed properties.

Soil erosion is the process by which wind, water, or gravity removes soil particles from land surfaces. Natural erosion generally occurs at slow rates; however, the rate of erosion

increases whenever the land is cleared or disturbed. Clearing and grubbing activities during construction remove vegetation and disrupt the structure of the soil surface, leaving soil susceptible to overland erosion, stream and channel erosion, and wind erosion. Ultimately, the material suspended by erosion settles during the sedimentation process in downstream reaches. This can lead to an increase in maintenance needs, flooding problems, and water quality concerns.

2.2 Overland Erosion

The overland erosion process begins when raindrops impact the soil surface and dislodge minute soil particles, which then become suspended in the water droplet. The sediment-laden water droplets accumulate on the soil surface until a sufficient quantity has developed to begin flowing under the natural forces of gravity.

The initial flow of sediment-laden water generally consists of a thin, slow-moving sheet, known as sheet flow. While sheet flow is generally not highly erosive on its own, it does begin to transport previously immobile sediment particles. Due to irregularities in the soil surface and uneven topography, sheet flow will usually begin to concentrate into small grooves, or rills, where the flow picks up velocity and erosive energy because of gravitational forces.

Rill erosion of the soil surface tends to concentrate more water, which then flow faster and gain erosive energy. Typically, rills are oriented downslope parallel to other rills, and rills are generally small enough to be easily stepped across. The combination of several adjacent rills, or sufficient enlargement of a single rill, begins gully erosion. Gully erosion of the soil surface tends to further concentrate more water flow.

Gullies have four principal methods of increasing erosion. First, gullies often have a “head cut” at the upstream end, which progresses its way upstream as water flowing into the gully erodes away the lip of the head. This process is similar to a waterfall working its way upstream. Second, the flow in a gully tends to undercut the banks. Once sufficiently undercut, the banks collapse into the gully where the collapsed soil is then washed away. Third, when banks collapse into the gully, flowing water is diverted around the temporary blockage of soil, which then increases velocities along one or both banks. Fourth, the concentration of flows in the gully can result in scour of the gully floor until a stable slope is obtained.

2.3 Stream and Channel Erosion

Streams and channels are subject to the same types of erosion as gullies, with slightly different terminology. A stream develops naturally to handle the storm water and groundwater drainage of a particular watershed. The location, length, width, slope, sediment composition and size, amount of meandering, etc., are all determined by the characteristics of the precipitation and the landforms. The stream adjusts naturally to changes in rainfall, land cover, geology, and many other factors.

One or more of the following factors may disrupt the delicate balance required for stable streams and channels and could generally precipitate erosion within streams and channels:

- Disturbing the banks of streams and channels is often required during construction. Once vegetation or other bank protection measures are disturbed, flows may begin to erode the unprotected soil.

- Disturbing the flow within a stream or channel is often necessary to facilitate construction activities. However, this should only be allowed when traversing banks with a temporary stream crossing, culvert installation, bridge construction, etc. By diverting flows within the channel, velocities are generally increased in some areas to compensate for decreases in other areas. The increases in velocity may exceed those normally experienced by the channel, resulting in bank erosion and bottom scour.

- Increasing the quantity and rate of flow to streams and channels often results from construction activities and construction of facilities that increase the quantity and rate of runoff, as well as how runoff is conveyed to the discharge point. The increased quantity and rate of flow can cause bank erosion and bottom scour.

Soil characteristics play a key role in determining stream and channel flow. The tractive force or shear stress developed by flowing water over the channel banks and bottom can cause the soil particles to move and become suspended into the runoff. The permissible shear stress indicates the maximum stress that the channel banks and bottom can sustain without compromising stability. Determining the shear stress for a man-made channel is relatively easy, when compared to a stream, which is constantly changing shape, direction, material, etc.

Disturbing a stream or other natural channel should only be done as a last resort. TDEC requires permits for the disturbance of any blue-line stream. The U.S. Army Corps of Engineers (USCOE) may also require a permit for the disturbance of any blue-line stream. A blue-line stream is defined

according to the 7.5-minute quadrangle maps published by the United States Geological Survey (USGS).

2.4 Dust Control

Wind erosion contributes to the degradation of storm water runoff by depositing dust over the land surfaces. This dust will generally be washed into the storm water drainage system during the first portion of a rainfall event. Dust is defined as solid particles or particulate matter small enough to remain suspended in the air for a period of time and large enough to eventually settle out of the air. Dust from a construction site originates as inorganic particulate matter from rock and soil surfaces and material storage piles. The majority of dust generated and emitted into the air at a construction site is related to earth moving, demolition, construction traffic on unpaved surfaces, and wind over disturbed soil surfaces.

Consult AM-11, Dust Control, for various methods of reducing dust and air pollution; however, many of the BMPs that reduce overland erosion also greatly reduce the generation of dust. Dust control for disturbed surfaces generally is accomplished by applying water or a chemical mixture to the surface. BMPs that capture the sediment from the disturbed areas should also take into account the dust control chemicals.

2.5 Factors Influencing Erosion

There are five primary factors that influence erosion: soil characteristics, vegetative cover, topography, climate, and rainfall. The five factors are components in the Revised Universal Soil Loss Equation (RUSLE), which was originally developed for the USDA with regard to soil losses on farm land. Volume 2, Chapter 2 of the SWMM (Drainage Manual, Hydrology Chapter) includes instruction on RUSLE. For more information on RUSLE, see the official web site listed in Chapter 8. The RUSLE formula is:

$$A = R\ K\ L\ S\ C\ P$$

where A = predicted soil loss (tons per acre per year)
R = rainfall erosion index
K = soil erodibility factor
L = slope length factor
S = slope steepness factor
C = vegetative cover factor
P = erosion control practice factor

- Rainfall frequency, intensity, and duration are fundamental factors in determining the amounts of erosion produced. When storms are frequent, intense, or of long duration, erosion risks are high. In the City of Memphis and Shelby County, the months with highest rainfall are December through May, which coincide with the period of minimal vegetative cover. However, the most intense storms occur during the spring and summer months. This leads to the conclusion that the spring is potentially the most erosive season. Site grading and excavation occurs at the beginning of a construction project, which is also often during spring.

- Climate is a key factor that influences erosion. Factors such as humidity, temperature extremes, freeze/thaw cycles, and average wind speeds can have significant effects on soil stability and structure. In addition, these factors affect the permeability of the soil.

- Soil characteristics that determine the erodibility of the soil include particle size and shape, particle gradation, organic content, soil structure, and permeability. Less permeable soils have a higher likelihood for increased runoff and erosion, particularly soils with a high percentage of silt and clay. Fill soil and placed embankments are more likely to erode than cut areas and excavations, so fill areas are generally required to have a flatter slope than cut areas.

- Vegetative cover plays an important role in controlling erosion by shielding the soil surface from the impacts of falling rain and by slowing the velocity of runoff. This permits greater infiltration, maintains the soil's capacity to absorb water, and holds soil particles in place. Vegetative root structures create a favorable soil structure, improving its stability and permeability.

- Topography such as slope length and steepness are key elements in determining the volume and velocity of runoff. As slope length and steepness increases, so does the rate of runoff and the erosion potential. Steep slopes should be limited to short lengths whenever possible.

Application of a soil erosion equation such as RUSLE is generally not necessary on small construction projects, but may be required by the Memphis or Shelby County Engineer in situations involving very large areas or in extremely sensitive areas. However, the basic concepts such as limiting the gradient and length of steep slopes should be practiced whenever possible.

2.6 Sedimentation Process

The settling of soil particles is known as the process of sedimentation. Once soil particles are eroded by and suspended in water or wind, they can be carried a distance, from a few inches to many miles, before conditions allow the forces of gravity to cause the soil particles to settle. In other words, the sedimentation process usually occurs when the flow of water slows.

Larger particles, such as gravel and sand, will settle more rapidly than fine particles, such as silt and clay. Particles may be re-suspended when the flow of water increases. The pattern of the sedimentation process is often a good indication of the storm water flow that carried it. Excessive levels of sediment can plug storm drains, block streams and channels, reduce floodwater storage, damage habitats, and occasionally result in formation of habitats in undesirable locations. Sediment removal is an expensive task that must be performed regularly.

Generally, the sedimentation process can be forced to occur by creating conditions that slow the flow of water or air, thus allowing particles to settle. Conversely, creating conditions of rapid and turbulent flow will prevent particles from settling. Sediment traps and sediment basins are examples where sedimentation occurs at a designed location. Chemical flocculants can be used in Memphis and Shelby County in conjunction with sediment basins to help settle suspended sediments.

3.0 STORM WATER POLLUTANTS

Sediment from erosion is the pollutant most frequently associated with construction activities. However, other pollutants are also carried into the storm water system and streams. Storm water pollutants can be categorized into the following nine categories: sediments, nutrients, heavy metals, toxic materials (including pesticides and herbicides), oil and grease, bacteria and viruses, biological and chemical oxygen-demanding substances, floatable waste materials, and construction waste materials.

These pollutants originate from a variety of locations such as residences, commercial properties, industry, schools, offices, parking lots, roads, restaurants, and grocery stores. Automotive vehicles and other motorized equipment are a major source of pollutants, so that parking lots and roads are considered a major factor of nonpoint source pollution. A typical single-family household contains dozens of hazardous chemicals for indoor or outdoor use, which are often disposed incorrectly on the lawn or in the woods.

Typical construction activities that contribute storm water pollutants include: site grading, clearing and grubbing, paving operations, demolition, materials storage, equipment fueling, vehicle maintenance, painting, and use of other chemicals. Maintenance activities such as power washing without containment of rinsate can transport concentrated amounts of pollutants including detergents into the drainage system that would not necessarily be mobilized by normal rain events. By taking an activities inventory, the engineer/designer/contractor/owner can identify potential pollutant sources and then select appropriate BMPs to address these sources. Each of the BMP fact sheets includes a list of the targeted constituents. The list is a general guide to selecting BMPs and is not intended to address any particular type of residence, commercial property, industry, or institution. The designer must use care and common sense in evaluating potential BMPs, as discussed further in Chapter 4.

In addition to pollution, storm water runoff and streams can also suffer degradation from thermal effects and from pH changes. These basic water characteristics can degrade aquatic habitats such as streams and lakes. Concrete and asphalt tend to store large amounts of heat efficiently, which is then transferred to storm water runoff. Concrete and asphalt channel linings are often used for urban streams. In addition to the type of channel lining used, thermal pollution is also caused by a lack of natural shade.

Almost every BMP contains a graphical list of targeted constituents for BMP pollutant removal; this information is included on the first page of each BMP fact sheet. The list of targeted constituents is a subjective estimate of pollutant removal effectiveness for the average BMP installation. In some instances, the selected BMP may be very effective. In other instances, there may be mitigating factors that nullify the potential storm water quality benefits of a particular BMP. The list is a general guide to selecting BMPs and does not address every type of residential, commercial, industrial, or institutional property use.

Tables 3-1 through 3-5 summarize the BMP pollutant removal information in a matrix form. For ease of display, the legend symbology is slightly different than the BMP fact sheets.

BMP Fact sheets	**Effectiveness of Pollutant Removal**	**Tables 3-1 through 3-5**
●	Significant Benefit	●
◗	Partial Benefit	◑
○	Low or Unknown Benefit	---

See Figure 4-2 of the BMP Manual for pollutant removal rates for dry detention basins (ST-01). See Table 4-5 of the BMP Manual for pollutant removal rates for typical urban BMPs.

3.1 Sediments

Most sediments are generated from soil and rock erosion, although some sediments are organic in nature. Man-made materials may also decompose or erode to create sediments. Sediments vary in terms of size and specific weight, which are the two main factors that determine when and how far sediment will travel. There are several complex equations that are used to predict how much sediment a stream or channel can carry. These equations generally yield different answers and rely on estimating several variables. In theory, a stream will deposit sediment if it tries to carry more than its sediment-carrying capacity, and a stream will pick up sediment if it has not yet reached its sediment-carrying capacity.

Sediment is harmful to aquatic life because it blocks sunlight that is necessary for photosynthesis and interferes with animal respiratory organs. Sediment can also accumulate on natural streambeds and other habitats, smothering the plants, and creatures that live there.

Table 3-1 **Activities and Methods** **(AM)** **Name of BMP**	**Number**	**Targeted Constituents**								
		Sediment	**Nutrients**	**Heavy Metals**	**Toxic Materials**	**Oil and Grease**	**Bacteria and Viruses**	**Oxygen Demand**	**Floatable Materials**	**Construction Wastes**
Employee Training	**AM-01**	●	●	●	●	●	●	●	●	●
Construction Scheduling	**AM-02**	●	◑	---	---	---	---	---	---	◑
Preservation of Existing Vegetation	**AM-03**	●	●	---	---	---	---	●	●	---
Maintenance of Existing Drainage Systems	**AM-04**	●	---	◑	---	◑	◑	●	●	---
Storm Drainage System Flushing	**AM-05**	●	---	◑	---	◑	---	---	◑	---
Material Delivery and Storage	**AM-06**	◑	◑	◑	◑	◑	◑	◑	◑	◑
Spill Prevention and Control	**AM-07**	---	◑	●	●	●	●	●	◑	---
Waste Management and Recycling	**AM-08**	---	●	●	●	●	●	●	●	●
Sanitary and Septic Waste Management	**AM-09**	---	●	---	---	---	●	●	---	---
Contaminated Soil Management	**AM-10**	◑	---	●	●	---	---	---	---	---
Dust Control	**AM-11**	●	---	---	◑	◑	---	---	---	---
Dewatering Operations	**AM-12**	●	---	◑	◑	◑	---	---	---	---
Pesticides, Herbicides, and Fertilizer Use	**AM-13**	---	●	---	●	---	---	●	---	---
Vehicle and Equipment Cleaning	**AM-14**	◑	◑	◑	◑	◑	---	◑	---	---
Vehicle and Equipment Fueling	**AM-15**	---	---	●	●	●	---	---	---	---
Vehicle and Equipment Maintenance and Repair	**AM-16**	---	---	●	●	●	---	---	---	---
Paving Operations	**AM-17**	◑	---	◑	◑	◑	---	---	---	---
Concrete Waste Management	**AM-18**	---	---	---	◑	◑	---	---	---	◑
Structure Construction and Painting	**AM-19**	---	---	---	◑	---	---	---	●	●

Table 3-2 Erosion and Sediment (ES)		**Targeted Constituents**								
Name of BMP	**Number**	**Sediment**	**Nutrients**	**Heavy Metals**	**Toxic Materials**	**Oil and Grease**	**Bacteria and Viruses**	**Oxygen Demand**	**Floatable Materials**	**Construction Wastes**
Stabilized Construction Site Access	**ES-01**	●	---	---	---	◑	---	---	---	---
Tire Washrack	**ES-02**	●	---	---	---	---	---	---	---	---
Construction Road Stabilization	**ES-03**	●	---	---	---	---	---	---	---	---
Gradient Terraces and Silt Trenches	**ES-04**	●	---	---	---	---	---	---	---	---
Surface Roughening	**ES-05**	●	---	---	---	---	---	---	---	---
Topsoil	**ES-06**	●	---	---	---	---	---	---	---	◑
Mulch	**ES-07**	●	◑	---	---	---	---	---	---	---
Seeding	**ES-08**	●	◑	---	◑	---	---	---	---	---
Sodding	**ES-09**	●	---	---	---	---	---	---	---	---
Trees, Shrubs, and Vines	**ES-10**	●	◑	---	---	---	---	---	---	---
Erosion Control Blankets and Mats	**ES-11**	●	---	---	---	---	---	---	---	---
Geotextiles	**ES-12**	●	---	---	---	---	---	---	---	---
Check Dams	**ES-13**	●	---	---	---	---	---	---	---	---
Silt Fence	**ES-14**	●	---	---	---	---	---	---	---	---
Straw Bale Barrier	**ES-15**	●	---	---	---	---	---	---	---	---
Sandbag Barrier	**ES-16**	●	---	---	---	---	---	---	---	---
Brush or Rock Filter Berm	**ES-17**	●	---	---	---	---	---	---	---	---
Temporary Sediment Trap	**ES-18**	●	---	---	---	---	---	---	---	◑
Sediment Basin	**ES-19**	●	◑	---	---	---	---	---	◑	◑
Bank Stabilization and Soil Bioengineering	**ES-20**	●	---	---	---	---	---	---	---	---

Table 3-2 (continued) Erosion and Sediment (ES) **Name of BMP**	**Number**	**Sediment**	**Nutrients**	**Heavy Metals**	**Toxic Materials**	**Oil and Grease**	**Bacteria and Viruses**	**Oxygen Demand**	**Floatable Materials**	**Construction Wastes**
Diversions and Downdrains	**ES-21**	●	---	---	---	---	---	---	---	---
Channel Linings	**ES-22**	●	◑	---	---	---	---	---	---	---
Riprap	**ES-23**	●	---	---	---	---	---	---	---	---
Temporary Inlet Protection	**ES-24**	●	---	---	---	---	---	---	◑	◑
Outlet Protection	**ES-25**	●	---	---	---	---	---	---	---	---
Level Spreader	**ES-26**	●	---	---	---	---	---	---	---	---
Floating Sediment Curtain	**ES-27**	●	---	---	---	---	---	---	---	---
Gabions	**ES-28**	●	---	---	---	---	---	---	---	---
TDOT Standard Details for Erosion Control	**ES-29**	●	---	---	---	---	---	---	---	◑
TDEC Erosion and Sediment Control BMPs	**ES-30**	●	---	---	---	---	---	---	---	◑

Table 3-3 Industrial and Commercial (IC)		**Targeted Constituents**								
Name of BMP	**Number**	**Sediment**	**Nutrients**	**Heavy Metals**	**Toxic Materials**	**Oil and Grease**	**Bacteria and Viruses**	**Oxygen Demand**	**Floatable Materials**	**Construction Wastes**
Non-Storm-Water Discharges to Storm Drains	**IC-01**	---	●	●	●	●	●	●	◑	◑
Outdoor Loading and Unloading of Materials	**IC-02**	---	●	●	●	●	---	●	●	---
Outdoor Container Storage of Liquid Materials	**IC-03**	---	---	●	●	●	---	●	---	---
Outdoor Process Equipment Operations	**IC-04**	●	---	●	●	●	---	---	---	---
Grounds Construction and Maintenance	**IC-05**	---	◑	●	●	◑	---	◑	◑	●
Over-Water Operations	**IC-06**	◑	◑	◑	◑	●	●	◑	●	---
Food Service and Handling	**IC-07**	---	●	---	◑	●	●	●	---	---
Power or Pressure Washing	**IC-08**	●	◑	●	●	●	---	◑	---	---
Swimming Pools and Spas	**IC-09**	---	---	---	●	---	---	●	---	---
Dumpsters	**IC-10**	◑	●	◑	◑	●	●	●	◑	◑
Kitchen Exhaust Cleaning	**IC-11**	---	●	---	◑	●	●	●	---	---
Air Conditioners and Refrigeration	**IC-12**	---	---	---	●	---	---	◑	---	---
Farms and Agriculture	**IC-13**	●	●	---	●	---	●	◑	---	---
Response to Private Property Sanitary Sewer Overflows	**IC-14**	---	●	---	◑	---	●	●	◑	---

Table 3-4 **Residential and Homeowners** **(RH)** **Name of BMP**	**Number**	**Targeted Constituents**								
		Sediment	**Nutrients**	**Heavy Metals**	**Toxic Materials**	**Oil and Grease**	**Bacteria and Viruses**	**Oxygen Demand**	**Floatable Materials**	**Construction Wastes**
Non-Storm-Water Discharges to Storm Drains	**RH-01**	●	●	●	●	●	●	●	●	◑
Vehicle Washing	**RH-02**	◑	◑	◑	◑	◑	---	◑	---	---
Vehicle Maintenance and Repairs	**RH-03**	◑	---	●	●	●	---	◑	---	---
Landscape Irrigation and Lawn Watering	**RH-04**	---	●	---	●	---	---	◑	---	---
Pesticides and Fertilizers	**RH-05**	---	●	◑	●	---	---	●	---	---
Household Solid and Hazardous Waste Mgmt	**RH-06**	---	---	●	●	●	---	◑	---	---
Sanitary Sewer Laterals and Septic Tanks	**RH-07**	---	●	---	---	---	●	●	---	---
Pet and Animal Wastes	**RH-08**	---	●	---	---	---	●	◑	---	---
Slope and Streambank Stabilization	**RH-09**	●	●	---	---	---	---	---	◑	---
Swimming Pools and Spas	**RH-10**	---	---	---	●	---	---	●	---	---
Boats and Marinas	**RH-11**	---	●	◑	◑	◑	●	●	●	---
Tips for Wet Basements and Crawl Spaces	**RH-12**	(no targeted constituents)								

Table 3-5 Storm Water Treatment (ST)		**Targeted Constituents**								
Name of BMP	**Number**	**Sediment**	**Nutrients**	**Heavy Metals**	**Toxic Materials**	**Oil and Grease**	**Bacteria and Viruses**	**Oxygen Demand**	**Floatable Materials**	**Construction Wastes**
Dry Detention Basin	**ST-01**	●	◑	◑	◑	◑	---	◑	◑	---
Wet Detention Basin	**ST-02**	●	●	●	●	◑	◑	◑	●	---
Infiltration Systems and Methods	**ST-03**	●	◑	◑	◑	◑	---	◑	◑	---
Constructed Wetlands	**ST-04**	◑	◑	◑	◑	◑	◑	◑	◑	---
Filter Strips and Swales	**ST-05**	◑	◑	◑	◑	◑	---	◑	---	---
Water Quality and Media Infiltration Inlets	**ST-06**	●	◑	◑	◑	◑	◑	◑	◑	---
Oil-Water Separator	**ST-07**	●	---	●	◑	●	---	◑	●	---
Underground Detention ***	**ST-08**	◑	---	---	---	---	---	---	◑	---
Multiple Systems	**ST-09**	◑	◑	◑	◑	◑	◑	◑	◑	◑

***Underground detention structures are only allowed in the City of Memphis and Shelby County by special permission.

3.2 Nutrients

Phosphorous, nitrogen, and other plant nutrients are generated naturally by organic activities in the soil, biological and chemical decomposition, etc. Streams and other natural channels have a limited ability to moderate and adjust to large amounts of man-made nutrients such as fertilizers. Nutrients are also generated by phosphorous-bearing soils, chemicals, food processing plants, lumber activities, restaurants, and wastewater treatment systems.

Nutrients can create excessive growth of vegetation or algae, which results in impaired use of water in lakes and other sources of water supply by creating taste and odor problems. Excess algae can also deplete dissolved oxygen levels, which results in fish kills. Collectively, the problems associated with excessive levels of nutrients in a receiving water are referred to as eutrophication impacts. The size of a receiving water is the principal factor in determining its ability to handle increased nutrients.

3.3 Heavy Metals

Heavy metals, even in low concentrations, are generally toxic to all life forms. Heavy metals are of particular concern because they are toxic to aquatic organisms, can be bio-accumulative, and have the potential to contaminate drinking water supplies. Significant portions of heavy metals in urban runoff are generated from cars and trucks. Gasoline and diesel fuels contain heavy metals, which are discharged through the vehicle exhaust and settle on the roadways and parking lots.

Most artificial surfaces (galvanized metal, paint, wood preservatives, roof shingles, plastic, asphalt) contain metals that can enter storm water as the surfaces corrode, flake, dissolve, decay, or leach. Careful maintenance, inspection, and repair can limit the cumulative effect from these surfaces.

3.4 Toxic Materials

Toxic materials are commonly used in residences, commercial facilities, industry, etc. Toxic materials are often synthetic organic compounds, such as adhesives, cleaners, solvents, or sealants. Accidental spills and leakage or deliberate dumping of these chemicals onto the ground or into storm drains causes environmental harm in receiving waters. Memphis and Shelby County programs for the collection of household hazardous waste have reduced the amount of toxic materials released by residential properties.

Herbicides, insecticides, and rodenticides (collectively termed pesticides) are commonly used on construction sites, lawns, parks, golf courses, etc. Unnecessary, excessive, or improper application

of these pesticides may result in direct water contamination. It is highly recommended that Memphis and Shelby County residents and businesses avoid these products whenever possible.

3.5 Oil and Grease

Oil and grease products are widely used throughout Memphis and Shelby County wherever automotive vehicles are found. Oil and grease can be spilled or leaked onto the ground and then washed into waterways. Sources include leakage during normal vehicle use, hydraulic line failure, spills during fueling, improper storage of used cooking oil, and inappropriate disposal of drained fluids. These products can cause severe harm to plant and animal life due to the additional effect of heavy metals and toxic hydrocarbon compounds contained in oil and grease products.

Oil and grease products have properties that affect the methods of capture and treatment. Most oil, grease, hydrocarbons, and other fuels are lighter than water. Therefore, skimmers and separators can be used to capture these pollutants. Oil and grease may form emulsions in turbulent or flowing water, an occurrence that makes this type of pollution very hard to remove. In addition, petroleum products and fuels create flammable vapors and are very detrimental to fish and other aquatic organisms.

3.6 Bacteria and Viruses

Bacteria and viruses are commonly found in organic materials that are part of storm water. Bacteria and viruses can come from multiple sources and often the exact cause cannot be pinpointed. Principal sources include sanitary sewer overflows and leakages; animal excrement from pets; livestock and feral animals; food particles; water used to prepare or clean food or food packaging; and restaurants. The presence of pathogens can make an otherwise attractive stream or lake into a public hazard that must be avoided.

Bacteria and viruses can cause fish kills and human illnesses. These pollutants are usually indicated by the fecal coliform count, which has been a source of concern for streams in Memphis and Shelby County. Sanitary sewers are sometimes the source of bacteria and viruses as well as septic systems and illicit sewer connections. Memphis and Shelby County MS4 NPDES permits require monitoring and/or program implementation elements for reduction of fecal coliform. The City of Memphis has on-going dry weather sampling, fecal coliform tracking studies (DNA typing)

and infrared fly-over assessments to determine the sources of fecal coliforms in order to develop a strategy to minimize the pollutant.

3.7 Oxygen-Demanding Substances

Some chemicals and substances are classified as oxygen-demanding substances. This means that in the presence of water, they will extract dissolved oxygen (DO) or even liberate bound oxygen from the water molecule. In chemical terms, oxygen is a very active electron-acceptor and can react with most anything.

Lower DO levels are often the cause of fish kills in streams and reservoirs. The degree of DO depletion is measured by the biochemical oxygen demand (BOD) test that expresses the amount of easily oxidized organic matter present in water. The chemical oxygen demand (COD) test is less frequently used and it measures all of the oxidizable matter present in water. BOD is generally caused by the decomposition of organic matter in storm water; sometimes nonorganic materials in the water can intensify DO depletion. Dissolved oxygen in streams and lakes also depends heavily on temperature.

3.8 Floatable Materials

Floatable waste materials have the potential to be carried downstream easily. It is important that every contractor, business, commercial property, etc., have an effective plan to handle all waste materials. Floatable waste materials may or may not contain other storm water pollutants. Floatable waste materials will often clog drainage structures and should be prevented from reaching the storm water drainage system. Screens and floatable booms are the primary ways to capture these pollutants if they have already entered the storm water system. Floatable waste materials can harm aquatic animals that try to ingest small pieces of floating matter.

Floatable pollution currently the #1 water quality priority of the City of Memphis Storm Water Program

Photo: "Tip of the Iceberg" by James Baker, Chair, Bottle Bill Committee, Tennessee Chapter, Sierra Club; December 8, 2004 — North bank of McKellar Lake in Memphis downstream of Nonconnah Creek

3.9 Construction Waste

Common construction waste materials include: wash water from concrete mixers; paints and painting equipment cleaning activities; solid organic wastes resulting from trees and shrubs removed during land clearing; wood and paper materials derived from packaging of building products; food containers such as paper or aluminum cans; industrial or heavy commercial process water; cooling water; vehicle washing; and sanitary wastes. The discharge of these wastes can lead to unsightly and polluted receiving waters.

It is important that every contractor have an effective plan to handle all construction waste materials. Construction materials should be organized and secured at the end of each workday. Recycling programs and markets are commonly available and are usually profitable to the contractor in terms of waste reduction and lessened disposal costs.

4.0 SELECTING BEST MANAGEMENT PRACTICES

Both erosion prevention practices and sediment control practices must be employed at all sites. **Due to the fine loess soil particles in the Memphis and Shelby County area that make sediment control difficult, property owners/developers must adequately address erosion prevention practices, such as scheduling and ground cover.** Sediment discharges must be in compliance with TDEC permits and must be controlled to the MEP, a technology-based discharge standard established for MS4s required by §402(b) of the Clean Water Act.

4.1 Construction Versus Post-Construction BMPs

The same level of care should be taken to select, install, and maintain construction (temporary) BMPs as is taken with post-construction (permanent) BMPs. The only difference is in the intended lifespan of the BMP. It is good to remember that, in the world of construction and industry, a temporary solution may be in place for a number of years due to oversight, neglect, good performance, etc. In general, temporary BMPs are intended to address construction activities, while permanent BMPs address long-term storm water management objectives.

Temporary BMPs may include a variety of "good housekeeping" measures and short-term erosion and sediment control activities. The contractor is responsible for properly constructing, implementing and maintaining the temporary practices and/or seeking guidance when the measures do not appear to be meeting the storm water management objectives (namely that sediment and other pollutants do not leave the construction site).

Permanent BMPs, which are designed to control long-term storm water pollution, are the final improvements to and configuration of the project. Permanent BMPs are selected by licensed professional engineers, incorporated into the plans and specifications for the project, and have long-term maintenance responsibilities identified. The contractor is responsible for properly constructing the permanent controls. Permanent BMPs are normally selected in the planning phase in conjunction with the approval of the tentative map designed during the design phase of a project and completed to the satisfaction of the City or County. Guidance on preparing a PCRC Plan is given in Chapter 7. Occasionally, unforeseen natural or man-made factors may require revisions to or additions of permanent BMPs during the construction phase. These revisions or additions must be approved by the City or County.

4.2 Identify Objectives

The objectives in pollution prevention for each property can vary widely. Therefore, a specific understanding of pollution risks for each activity is essential for selecting and implementing BMPs. Defining these risks requires review of the characteristics of the site and the nature of the construction process or industrial activity. This information should be carefully assembled and reviewed early in the design process. Once these pollution risks are defined, then BMP objectives are developed and specific BMPs can be selected. The BMP objectives for a typical construction project are as follows:

- Practice Good Housekeeping: Perform activities in a manner that keeps potential pollutants from either draining or being transported offsite by managing pollutant sources and modifying construction activities. Dispose of waste materials in designated areas and in designated containers away from rainfall and storm water runoff.

- Minimize Disturbed Areas: Determine project scheduling and only clear land that will be actively under construction in the near term (within the next 3 months). Minimize new land disturbance, and do not clear or disturb sensitive areas (e.g., steep slopes, buffers, and natural watercourses).

- Stabilize Disturbed Areas: Provide temporary stabilization of disturbed soils whenever active construction is not occurring on that portion of the site. Provide permanent stabilization during the final grading process and carefully landscape the site.

- Protect Slopes and Channels: Avoid disturbing steep or unstable slopes. Safely convey runoff from the top of the slope and stabilize disturbed slopes as quickly as possible. Avoid disturbing natural channels. Stabilize temporary and permanent channel crossings as quickly as possible and ensure that increases in runoff velocity caused by the project do not erode the channel.

- Control Site Perimeter: Upstream runoff should be diverted around or safely conveyed through the construction project, and must not cause downstream property damage. Runoff from the project site should be free of excessive sediment and other constituents.

- Control Internal Erosion and Drainage: Detain sediment-laden waters from actively disturbed areas within the site to minimize the risk of sediment leaving the site.

BMP objectives for an industrial or commercial facility already in operation will basically have all of the same BMP objectives. However, there will be greater emphasis placed on good housekeeping, institutional controls and procedures, good training methods and regular refresher classes, and using the best available technology. BMP objectives in this chapter are generally discussed from a construction point of view, but are applicable to all types of land uses. See Section 4.5 for pollution removal goals, and see Chapter 6 for pollution prevention plans for industrial and commercial sites.

Site characteristics and proposed contractor activities will affect the potential for site erosion and contamination by other constituents used on the construction site. It is important to plan the project to fit the topography and drainage patterns of the site. Before defining BMP objectives, these factors should be carefully considered:

1. Site conditions that affect erosion and sedimentation, which include:
    a. Soil type, including underlying soil strata that are likely to be exposed
    b. Natural terrain and slope
    c. Final slopes and grades
    d. Location of concentrated flows, storm drains, and streams
    e. Existing vegetation and ground cover

2. Climatic factors, which include:
    a. Seasonal rainfall patterns
    b. Appropriate design storm (quantity, intensity, duration)

3. Type of construction activity

4. Construction schedules, construction sequencing, and phasing of construction

5. Size of construction project and area to be graded

6. Location of the construction activity relative to adjacent uses and public improvements

7. Cost-effectiveness

8. Types of construction materials and potential pollutants present or that will be brought onsite

9. Floodplain, floodway, and buffer requirements

4.3 Select BMPs

Once the BMP objectives are defined, it is necessary to identify the BMPs that are best suited to meet each objective. To determine where to place BMPs, a map of the project site can be prepared with sufficient topographic detail to show existing and proposed drainage patterns and existing and proposed permanent storm water control structures. The project site map should identify the following:

- Locations where storm water enters and exits the site. Include both sheet and channel flow for the existing and final grading contours.

- Identify locations subject to high rates of erosion such as steep slopes and unlined channels. Long, steep slopes over 100 feet in length are considered as areas of moderate to high erosion potential.

- Categorize slopes as: low erosion potential (0 to 5 percent slope), moderate erosion potential (5 to 10 percent slope), or high erosion potential (slope greater than 10 percent).

- Use Volume 2, Chapter 2 of the SWMM (Drainage Manual, Hydrology Chapter) to properly size and design BMPs using soil loss equations and runoff calculations.

- Identify wetlands, springs, sinkholes, floodplains, floodways, sensitive areas, or buffers that must not be disturbed, as well as other areas where site improvements will not be constructed. Establish clearing limits around these areas to prevent disturbance by the construction activity.

- Identify the boundaries of tributary areas for each outfall location. Then calculate the approximate area of each tributary area. Define areas where various contractor activities have a probable risk of causing a runoff or pollutant discharge.

With this site map in hand, categories of BMPs can be selected and located. Detailed planning before construction begins and phasing construction activities achieve erosion and pollution prevention most cost effectively. It is more cost effective to prevent erosion and pollution than it is to remove sediment and pollutants. This is demonstrated in Figure 4-1 by first attempting to eliminate erosion and pollution generation (step 1) prior to reviewing the other alternatives in steps 2 through 4.

Figure 4-1
BMP Treatment Options

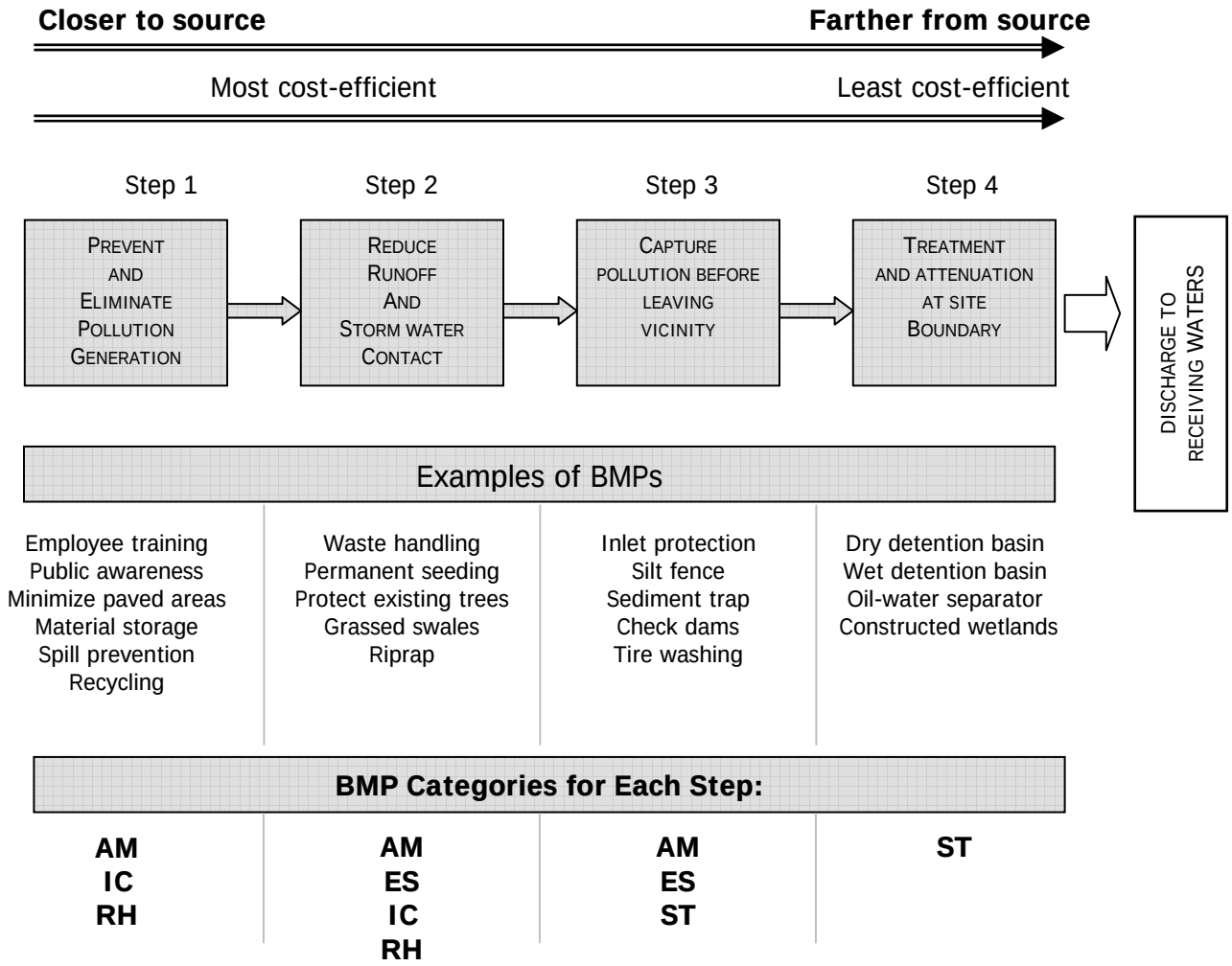

BMPs that can achieve multiple BMP objectives should be used to achieve cost-effective solutions. For instance, it is not always necessary to install extensive sediment trapping controls during initial grading. In fact, sediment trapping should be used only as a short-term measure for active construction areas and replaced by permanent stabilization measures as soon as possible. A permanent detention pond may be built first and used as temporary sediment control by placing a filter on the outlet. After construction is complete and the tributary area is stabilized, the permanent outlet configuration can be reestablished.

4.4 Factors for Construction Sites

Certain contractor activities may cause pollution if not properly managed. Not all BMPs will apply to every construction site; however, all of the suggested BMPs should be evaluated. Considerations for selecting BMPs for contractor activities include the following:

- Is it expected to rain? BMPs may be different on rainy days versus dry days, winter versus summer, etc. For instance, a material storage area may be covered with a tarp during the rainy season, but not in the summer. However, it should be noted that plans should be made for some amount of rain even if it is not expected to generate a flooding event.

- How much material is used? Less-intensive BMP implementation may be necessary if a "small" amount of pollutant-containing material is used. However, remember that even small amounts of some materials may be dangerous or have the potential to cause widespread pollution.

- How much water is used? The more water used and wastewater generated, the more likely that pollutants transported by this water will reach the storm water system or be transported offsite. Washing out one concrete truck on a flat area of the site may be sufficient (as long as the concrete is safely removed later), but a pit should be constructed if several trucks will be washed out at the same site.

- What are the site conditions? BMPs selected will differ depending on whether the activity is conducted on a slope or flat ground, near a storm water structure or watercourse, etc. Anticipating problems and conducting activities away from environmentally sensitive areas will reduce the cost and inconvenience of performing certain BMPs.

- In general, establishing a BMP for each conceivable pollutant discharge may be very costly and significantly disrupt construction. As a rule of thumb, establish controls for common (daily or weekly) activities and be prepared to respond quickly to accidents. This rule of

thumb only applies to contractors handling unusual materials that are not usually at the project site. Industries and commercial facilities are expected to have contingency plans and spill measures for every material that is used regularly.

Therefore, keep in mind that the BMPs for contractor activities are suggested practices, which may or may not apply in every case. Construction personnel should be instructed to develop additional or alternative BMPs, which are more cost effective for a particular project.

The best BMP is a construction work force aware of the pollution potential of its activities and committed to a clean worksite.

4.5 Storm Water Treatment Removal Goals

Various BMPs will have different rates of effectiveness. For most BMPs, the goal is to discharge clear storm water with no visible pollutants (to the maximum extent practicable) and no known sources of man-made pollution (such as toxic substances, chemicals or fertilizers). The objective of this section is to establish a baseline for pollution removal goals to evaluate the storm water treatment BMPs (**ST**), especially manufactured BMP systems, oil-water separators, or other innovative methods of treating storm water runoff. Memphis and Shelby County encourage water quality treatment and reserve the right to require water quality treatment. As stated in Section 1.6, the City of Memphis allows storm water fee adjustments and credits against a user's storm water fee as a financial incentive to implement structural and nonstructural BMPs to encourage water quality improvement.

There is essentially a three-step approach to achieving water quality (simplified from the 4 steps shown in the BMP treatment train for Figure 4-1). The first step is large-scale prevention of pollution from entering or even contacting any storm water runoff (**AM**, **ES, IC, RH**). The second step is removal of the visible components of storm water runoff pollution, such as coarse sediment, oil and grease, bulk materials, and floating debris (**AM**, **ES**, **IC**, **ST**). The third step is the treatment and removal of the less obvious pollutants in storm water runoff, such as fine sediment, nutrients, and heavy metals from automotive emissions (**ST**).

Memphis and Shelby County do not currently require that the "first flush" volume be detained and treated; however, they require the use of volume control methods for detention that will reduce flows from structures and provide a water quality benefit for some storm events. Volume 2 of the SWMM details the detention requirements for volume control of the two- and five-year/24-hour storm events. In most cases, this type of detention will not provide treatment of the first flush,

which usually represents the early stages of a storm event, that typically delivers a large amount of accumulated pollutants and sediments that have been deposited since the last storm event. In actuality, it is not possible to predict the manner in which rainfall will come. The first flush may be a steady drizzle that slowly dissolves oil, grease, or other automotive combustion by-products from the streets, or it may be a heavy downpour that really does flush all sediments and accumulated particulates into the storm drain. As previously stated, some water quality benefit may result from the water quantity detention requirements for larger storms.

As a frame of reference, management of first flush volumes are widely required throughout the United States and generally depend on the types of local rainfall patterns. The rainfall statistics in Table 4-1 for Zone 2 (Tennessee's zone) shows relative storm volumes, intensities, and durations and how a summer storm can differ from the annual storm.

Table 4-1
Representative Rainfall Statistics for Zone 2
(DE, MD, KY, NC, TN, VA, WV, and Parts of IL, IN, OH)

	Mean Volume	Mean Intensity	Mean Duration	Mean Interval between Storms
Annual	0.36 inches	0.066 in/hour	5.9 hours	77 hours
Summer	0.40 inches	0.101 in/hour	4.2 hours	77 hours

Source: City of Knoxville BMP Manual

The Table 4-2 represents a mechanism for estimating the amount of annual precipitation that is captured by an extended dry detention basin, based upon computer modeling performed by CDM using the U.S. Army Corps of Engineers program STORM for a study of dry detention basins in the Metropolitan Washington, D.C. area:

Table 4-2
Percentage of Capture for Average Annual Storm Water Runoff

Storage (inches)	Percent imperviousness for contributing watershed (I)					
	I = 0%	I = 20%	I = 40%	I = 60%	I = 80%	I = 100%
0.20	94%	77%	62%	52%	44%	38%
0.40	100%	94%	86%	77%	69%	62%
0.60	100%	99%	94%	89%	83%	77%
0.80	100%	100%	98%	94%	90%	86%
1.00	100%	100%	99%	97%	94%	91%
1.50	100%	100%	100%	100%	99%	97%

Source: Computer modeling by CDM

The overall basis for evaluating pollution removal efficiencies for an example storm water treatment BMP is shown in Figure 4-2 (taken from reference 152). These six categories represent some of

Figure 4-2
Pollutant Removal for Dry Detention Basins

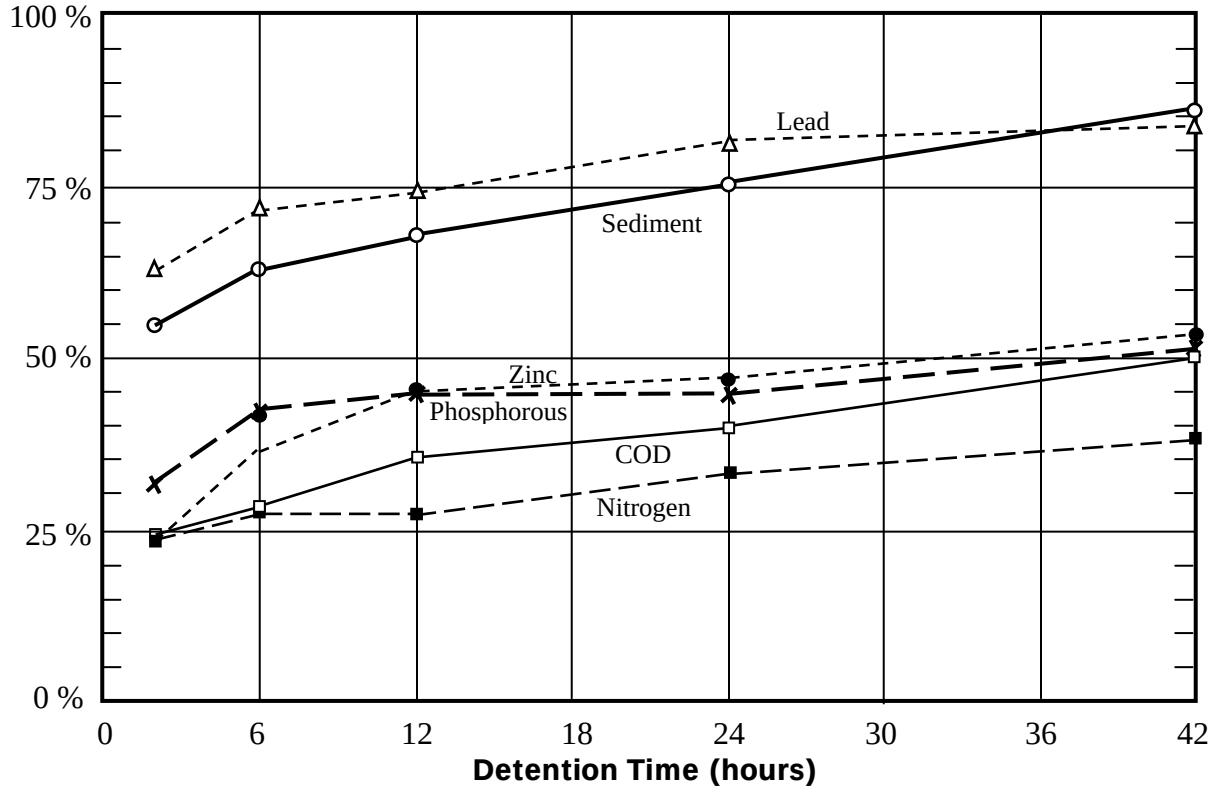

- Δ Pb — Lead
- ○ TSS — Total suspended
- ✗ sediment
- ● Zn — Zinc
- □ P — Total phosphorous
- ■ COD — chemical oxygen

the common pollutants found in an urban environment, with the principal category considered to be the total suspended sediments (TSS). Figure 4-2 shows that the dry detention basin with a 24-hour detention time will remove approximately 75% of the sediment. New construction and redevelopment projects in Memphis and Shelby County are required to have a 24-hour storm water detention of the two- and five-year storm volumes. Dissolved nutrients (phosphorous and nitrogen) are much harder to remove from storm water runoff, and a removal rate of 30% to 40% is reasonable for a detention time of 24 hours. A closer look shows that even two hours of detention time will accomplish a great deal of storm water treatment.

Typical pollutants from areas that carry automobile traffic (such as highways, streets, and parking lots) are shown in Table 4-3. Toxic pollutants such as polychlorinated biphenyls may also be present. Heavy metals, oil and grease, and coarse sediments can be removed efficiently through the use of oil-water separators or by media filtration inlets, provided that these manufactured systems are carefully chosen for each application.

Table 4-3
Typical Pollutants from Highways and Streets
(from Reference 40)

Sources	Parameters	Average Concentration mg/L	Range of Concentration mg/L
Particulates: (tires, brake pads, car exhaust, mud)	Total suspended solids (TSS)	261	4 - 1656
	Total volatile solids (TVS)	242	26 - 1522
Heavy Metals: (tires, brake pads, motor oil, rust, leaded fuel, additives to other types of vehicle fluids)	Cadmium (Cd)	0.04	0.01 - 0.40
	Copper (Cu)	0.10	0.01 - 0.88
	Chromium (Cr)	0.04	0.01 - 0.14
	Iron (Fe)	10.3	0.10 - 45
	Lead (Pb)	0.96	0.02 - 13
	Nickel (Ni)	9.92	0.10 - 49
	Zinc (Zn)	0.41	0.01 - 3.4
Organic Matter: (vegetation, litter, food, animal droppings, fuel, and oil)	Biochemical oxygen demand (BOD_5)	24	2 - 133
	Chemical oxygen demand (COD)	15	5 - 1058
	Oil and grease	9.5	1 - 104
	Total organic carbon (TOC)	41	5 - 290
Nutrients: (fertilizers, natural soils, chemicals)	Total kjeldahl nitrogen (TKN)	3.0	0.10 - 14
	Phosphorous (expressed as PO_4)	0.8	0.05 - 3.5

mg/L = milligrams per liter

Table 4-4 shows the expected pollution concentration for three typical land uses, based upon published data (1993) from the National Urban Runoff Program at many locations throughout the United States. These values are for illustrative purposes only, due to the many variables involved.

The total water hardness and the amount of storm water runoff dilution are major factors in determining concentrations. Table 4-5 shows a representative range of efficiencies for several types of storm water treatment BMPs. These efficiencies are typical for well-constructed detention basins and other structures that are properly inspected and maintained in good working order.

Table 4-4
Pollutant Concentration in Urban Runoff for Annual Exceedance Frequencies
(from Reference 166)

	Residential			Mixed Land Use			Commercial		
Pollutant	**25 %**	**10 %**	**1 %**	**25 %**	**10 %**	**1 %**	**25 %**	**10 %**	**1 %**
	(pollutants are measured in mg/L for each annual exceedance frequency)								
COD	103	141	241	93	130	228	63	97	199
Lead	0.23	0.34	0.68	0.23	0.42	1.22	0.16	0.23	0.44
Zinc	0.22	0.34	0.47	0.25	0.37	0.77	0.41	0.69	1.7

Table 4-5
Comparative Pollutant Removal Percentages of Urban BMP Designs
(from Reference 101)

BMP DESIGN	**TSS**	**Total P**	**Total N**	**Oxygen Demand**	**Trace Metals**
	(expressed in percentages)				
Dry detention basin, First flush held for 6 to 12 hours	60 – 80	20 – 40	20 – 40	20 – 40	40 – 60
Dry detention basin, 1” runoff volume held for 24 hours	80 - 100	40 – 60	20 – 40	40 – 60	60 – 80
Dry detention basin with shallow marsh and forebay, 1” runoff volume held for 24 hours	80 - 100	60 – 80	40 – 60	40 – 60	60 – 80
Wet detention basin, Permanent pool = 0.5” per impervious acre	60 – 80	40 – 60	20 – 40	20 – 40	20 – 40
Wet detention basin, Permanent pool = 2.5 x mean storm runoff	60 – 80	40 – 60	20 – 40	20 – 40	60 – 80
Wet detention basin, Permanent pool = 4.0 x mean storm runoff	80 - 100	60 – 80	40 – 60	40 – 60	60 – 80
Infiltration basin, Exfiltrates 0.5” per impervious acre	60 – 80	40 – 60	40 – 60	60 – 80	40 – 60
Infiltration basin, Exfiltrates 1” per impervious acre	80 - 100	40 – 60	40 – 60	60 – 80	80 - 100
Infiltration basin, Exfiltrates all runoff from 2-year design storm	80 - 100	60 – 80	60 – 80	80 - 100	80 - 100
Filter strip, 20’ wide turf strip	20 – 40	0 - 20	0 - 20	0 - 20	20 – 40
Filter strip, 100’ wide forested buffer with level spreader	80 - 100	40 – 60	40 – 60	60 – 80	80 - 100
Grass swale, Moderate slopes with no check dams	0 - 20	0 - 20	0 - 20	0 - 20	0 - 20
Grass swale, Low slopes with check dams	20 – 40	20 – 40	20 – 40	20 – 40	0 - 20
Water quality inlet or oil-water separator, (consult manufacturer)	Varies	Varies	Varies	Varies	Varies

5.0 EROSION AND SEDIMENT CONTROL PLANS

5.1 Overall Requirements

The use of source control BMPs to control erosion before it starts is the preferred method of long-term sediment control. However, the best protection on active construction sites is generally obtained through simultaneous application of both source control and sediment containment BMPs. This combination of controls is effective because it prevents most erosion before it starts and has the ability to capture sediments that become suspended before the transporting flows leave the construction site.

BMPs for erosion and sediment control are selected to meet the BMP objectives based on specific site conditions, construction activities, and cost effectiveness. Since construction site conditions are constantly changing, different BMPs may be needed at different times during construction.

In most cases, permanent BMPs can be implemented most effectively when they can be integrated into other aspects of the project design. This requires that storm water control be considered early in the design process. Storm water detention is required for most types of development and some types of redevelopment within Memphis and Shelby County. Some BMPs can be incorporated into storm water detention facilities with modest design refinements and limited increases in land area and cost. Some areas can be used for more than one purpose, usually in a cost-effective way. Landscaped open space, which is relatively flat, may be combined with storm water quality/ quantity facilities. Vegetated swales and buffer areas may be used as roadside corridors or along parking lots.

5.1.1 TDEC Requirements

TDEC's General Permit for Storm Water Discharges Associated with Construction Activities (Permit TNR100000) requires ESCPs be prepared as a part of a (SWPPP) for sites with disturbance of 1 acre or more of land. The ESCP plans and specifications that include the design of sediment basins or other sediment controls involving structural, hydraulic, hydrologic, or other engineering calculations must be prepared by a licensed professional engineer or landscape architect, certified, and registered by the State Board of Architectural and Engineer Examiners, pursuant to Section 62-202, Tennessee Code Annotated, to practice in Tennessee.[1]; however, portions of the ESCP that do not involve design may be prepared by a Certified Professional in Erosion and Sediment Control.

[1] Tennessee General Permit No. TNR100000 Storm Water Discharges Associated with Construction Activities, Section 3.1.1.

Review TDEC's general permit for storm water discharges for construction activities to ensure state requirements are met.

5.1.2 City/County Requirements

Memphis and Shelby County require ESCPs that are submitted for municipal review to meet all the requirements of TNR100000. Appendix A of the Policy Manual, Volume 1 of the SWMM, contains a form required for all plan submittals to Memphis and/or Shelby County certifying that planned development is in compliance with TNR100000.

Typically, the ESCP sent through review to Memphis and/or Shelby County is the same drawing that was sent to TDEC to obtain coverage under TNR100000. There are no additional requirements; however, the City and County require that ESCPs be submitted in conformance with the SWMM. The BMPs included in the SWMM have been approved by Memphis and Shelby County and should be adhered to in the development of ESCPs in Memphis and Shelby County.

5.2 Minimize Disturbed Areas

The first step for selecting BMPs is to compare the project layout and schedule with onsite management measures that, where appropriate, can limit the exposure of the project site to erosion and sedimentation. Scheduling and planning considerations are the least expensive way to limit the need for erosion and sediment control measures. Consider the following procedures to minimize disturbed areas:

1. Do not disturb any portion of the site unless an improvement is to be constructed there. Retain existing vegetation and ground cover where feasible, especially along streams and watercourses and along the downstream perimeter of the site.

2. Minimize the size of disturbed areas and time of exposure by careful phasing of construction. Minimize the amount of denuded areas and any new grading activities during the wet months of December through May. Do not clear any portion of the site until active construction begins. Use temporary cover (such as seeding or straw) whenever construction is halted or delayed.

3. Phased grading operations should limit the areas exposed to the process of erosion at any one time. Only areas that are actively involved in cut and fill operations or are

otherwise being graded should be exposed. Exposed areas should be stabilized as soon as grading is complete in that area.

4. Construct permanent storm water control facilities such as detention basins and perimeter channels early in the project and use these BMPs for sediment trapping, slope stabilization, and runoff velocity reduction throughout the construction period.

5. Quickly complete construction on each portion of the site. Install landscaping features and other improvements that permanently stabilize each part of the site immediately after the land has been graded to its final contour.

The purpose of site stabilization BMPs is to prevent erosion by covering disturbed soil. This covering may be vegetative, chemical, or physical. Any exposed soil is subject to erosion — either by rainfall striking the ground, runoff flowing over the soil, wind blowing across the soil, or vehicles driving on the soil. Thus all exposed soils should be stabilized except where active construction is in progress. Locations on a construction site that are particularly subject to erosion and should be stabilized as soon as possible include:

- Slopes
- Highly erosive soils
- Construction entrances
- Swales/wet weather conveyances
- Soil stockpiles

5.3 Site Perimeter Controls

The purpose of site perimeter controls is to protect downstream areas from erosion, sediment, flooding problems, and excessive runoff. By doing this, the contractor will not only be obeying the laws, but also making good neighbors. If construction phasing will allow, consider installing permanent storm water control facilities (detention basins and perimeter channels) early in the project and use these BMPs for sediment trapping, slope stabilization, and runoff velocity reduction throughout the construction period.

- Disturbed areas or slopes that drain toward adjacent properties, storm drain inlets or receiving waters should be protected with continuous berms, silt fences, sandbags, straw bales, etc., to prevent sediment discharge. The contractor should be prepared to stabilize those soils with additional protective measures prior to the onset of rain.

- When grading has been completed, the areas should be protected with vegetative measures such as mulching, seeding, planting, emulsifiers, or a combination of these methods. The combination of erosion protection measures and sediment control devices should remain in place until the area is permanently stabilized.

- Significant offsite flows (especially concentrated flows) that drain onto disturbed areas or slopes should be controlled through use of continuous berms, earth dikes, drainage swales, check dams, and lined ditches that will allow for controlled passage or containment of flows.

- Concentrated flows that are discharged offsite should be controlled through outlet protection and velocity dissipation devices to prevent erosion of downstream areas. See ES-25, Outlet Protection, for various types of velocity dissipation devices.

- Perimeter controls should be placed everywhere runoff enters or leaves the site, before clearing and grubbing begin. Both runoff and sediment typically overload perimeter controls so that constant monitoring and maintenance is required. Additional controls within the interior of the construction site (such as check dams and sediment traps, etc.), should supplement perimeter controls once rough grading is complete.

5.4 Internal Erosion and Drainage Design

When perimeter controls and outfall devices have been installed, internal erosion and drainage design can be addressed. Internal design elements are generally more time intensive. The middle of a project site is where construction phasing and sequencing becomes important. Until the permanent facilities are constructed, temporary storm water facilities will be subjected to erosion from concentrated flows.

- These facilities should be stabilized through temporary check dams and geotextile mats, and under extreme erosive conditions, by lining with concrete.

- Long or steep slopes should be terraced at regular intervals. Terraces will slow down the runoff and provide a place for small amounts of sediment to settle out.

- Slope benches may be constructed either with ditches along them or back-sloped at a gentle angle toward the hill. These benches and ditches intercept runoff before it can reach an erosive velocity and divert it to a stable outlet.

- Creating a rough surface for runoff to cross (such as tall grass) can reduce overland flow velocities.

5.5 Inspection and Maintenance

Inspection and maintenance are the key elements in controlling erosion and sediment. Erosion and sediment control devices are installed as necessary and moved around the project site. Inspection should be performed after each rainfall and at least weekly. Maintenance must be performed immediately whenever deficiencies are noted. Checklists can help to document the inspection and maintenance process. A sample Erosion and Sediment Control Plan Review Checklist and a sample Site Inspection Checklist are included at the end of this section.

Larger projects should generally arrange for a preconstruction assistance meeting in order to coordinate erosion control objectives and methods with the city or county inspector prior to commencing clearing and grading. The city or county inspector will visit the project periodically and will also be involved in the final inspection checklists and approval.

Many BMP controls work on the same principle; the velocity of sediment-laden runoff is slowed by temporary barriers or traps, which pond the storm water, allowing the sediments to settle out. Therefore, sediment removal is an important activity in maintaining several BMPs. Excessive sediment should be removed from the storm water both within and along the perimeter of the project site. Appropriate strategies for the inspection and maintenance of erosion and sediment control features include:

1. Verify that sediment-laden storm water is directed to temporary sediment traps or basins. Verify that sediment basins and traps are at low points below disturbed areas.

2. Protect all existing or newly installed storm drainage structures from sediment clogging by providing inlet protection for area drains and curb inlets. Storm water inlet protection can utilize sand bags, sediment traps, or other similar devices.

3. Excavate permanent storm water detention ponds early in the project, use them as sedimentation ponds during construction, remove accumulated sediment, and landscape the ponds when the upstream drainage area is stabilized.

4. Inspect temporary sediment barriers such as silt fences, straw bale barriers, rock filters, and continuous berms after each rainfall. These barriers should only be used in areas where

sheet flow runoff occurs. They are ineffective if the runoff is concentrated into rill or gully flow.

5. Internal outfalls must also be protected to reduce scour from high velocity flows leaving pipes or other drainage facilities.

5.6 ESCP Preparation Guidance

In general, the ESCP will consist of a narrative and a drawing. The project designer may choose to have the narrative included on a drawing or issued as a report. The owner of the land being developed has the ultimate responsibility for the ESCP preparation and submittal to TDEC, Memphis and Shelby County. The owner may designate someone to prepare the plan, but the owner still has the ultimate responsibility.

A narrative (limited to one paragraph on the plans submittal) is required to explain the decisions concerning erosion and sediment control. The narrative should be adequate to allow a reviewer to make intelligent judgments concerning the effectiveness of the controls. It should contain complete and concise information regarding information that is not usually shown on drawings, such as construction schedules, existing soils, calculations and computations, types of vegetation, inspection and maintenance of controls, etc.

The level of detail should be appropriate to the project size and complexity. Projects near streams and other sensitive areas will require a high level of detail. In general, properties with a high percentage of impervious area will need a higher level of detail than properties with a low percentage of impervious area. Steep slopes may also affect the amount of effort in preparing an ESCP.

The Tennessee Department of Transportation (TDOT) is an excellent source for erosion control details. There are over 300 TDOT Standard Roadway and Structure Drawings, grouped into the following categories: roadway design, culverts and endwalls, catch basins and endwalls, roadway and pavement appurtenances, safety appurtenances and fence, traffic control appurtenances, and erosion control and landscaping. Contact TDOT for further details on how to purchase this reference, or these details may also be viewed and downloaded as Acrobat files from http://www.tdot.state.tn.us/Chief_Engineer/engr library/design/Std_Drwg_Eng.htm. TDOT drawing RD-L-4 contains a standard legend that can be helpful in depicting erosion and sediment control items.

A typical checklist for preparing an ESCP is included at the end of this section. Many engineering firms and construction contractors have their own checklists or templates for preparing an ESCP.

Many engineering firms and construction contractors have a standard set of general notes, which are generally sufficient. The following list contains general notes for a typical small project.

Typical General Notes for Erosion and Sediment Control Plans:

1. As a minimum, all erosion and sediment control practices will be constructed and maintained according to the standards located in the Memphis and Shelby County SWMM, and as required by state and federal laws.

2. A copy of the approved erosion and sediment control plan shall be maintained at the project site at all times. This copy shall be made available to the City or County upon request.

3. Prior to commencing land-disturbing activities in any area not on the approved erosion and sediment control plan, the contractor shall submit a supplementary erosion control plan to TDEC and the City or County for review and approval.

4. All erosion and sediment control measures are to be placed prior to or as the first step in clearing and grading. The contractor is responsible for any additional erosion control measures necessary to prevent erosion and sedimentation.

5. The City or County must be notified prior to dewatering operations. Water must be pumped through an approved filtering device. The City or County may suspend dewatering operations if pollution is observed.

6. The contractor shall inspect all erosion and sediment control devices per TNR100000. The contractor shall perform any repairs or maintenance immediately in order to ensure effective erosion and sediment control.

7. The contractor shall maintain a record of all inspections and maintenance activities at the project site. This record shall be made available to the City or County upon request.

Typical Checklist for Preparing Erosion and Sediment Control Plan Narrative (Sheet 1)

In a single paragraph on a 24" x 30" plan submittal, provide the following information. Make sure the site name and address are included in the paragraph and check the submittal for legibility, page numbers, and correct spelling.

_____ Describe existing site conditions (vegetation, drainage patterns, topography) and proposed site conditions (ground cover, drainage patterns, and site grading)

_____ Project description — Purpose of grading or construction activity, total area to be disturbed

_____ Adjacent property and uses

_____ Critical or sensitive areas — Steep slopes, streams, wetlands, sinkholes, etc.

_____ Construction scheduling — Duration of clearing, open grading, installation of permanent storm water controls

_____ Inspection and maintenance schedule for BMPs and erosion control devices

_____ Briefly describe the design standards used for any detention structures

Site Plan (Sheet 2)

_____ Basic drawing format — North arrow, scale, engineer stamp, site name and address, legibility, drawing legend, typical abbreviations

_____ Vicinity map — A small map showing the surrounding area, including landmarks, streams, and roads

_____ Existing vegetation and trees

_____ Limits of clearing and grading

_____ Existing and proposed contours — Appropriate interval, contours match together

_____ Site development — Show all buildings, roads, parking lots, and other structures

_____ Construction access routes, borrow areas, spoil areas

_____ Existing and proposed drainage structures — Sizes, materials, slopes, other important dimensions

_____ Drainage patterns and watershed boundaries — Indicate drainage area for each watershed

_____ Property boundaries and easements

_____ Location of critical or sensitive areas

_____ Location of BMPs and erosion control devices — Typical placement as construction work progresses

_____ Details for BMPs and erosion control devices

Storm Water Inspection Checklist
For a Construction Activity Subject to NPDES Requirements

Date:_____ **Time:**_____

Site: _____ **Permit No:** _____

Site Operator: _____

Vehicle Ingress/Egress Locations (Construction Entrances):

Built per specification (2" to 3" stone, 20'W x 50'L x 6"D minimum, etc.)	❑ Yes ❑ No ❑ N/A
Maintenance is being performed (sweeping affected streets, etc.)	❑ Yes ❑ No ❑ N/A

Grading:

Clearing limits are defined and being maintained	❑ Yes ❑ No ❑ N/A
Areas designated as buffer zones are undisturbed	❑ Yes ❑ No ❑ N/A
Areas inactive for the past 15 days have been stabilized	❑ Yes ❑ No ❑ N/A
Graded area within 50-acre limit (phased is >50)	❑ Yes ❑ No ❑ N/A
Dust being properly controlled	❑ Yes ❑ No ❑ N/A

Silt Fencing:

Installed according to approved plans (reinforced, entrenched 6", etc.)	❑ Yes ❑ No ❑ N/A
Silt fencing being maintained (less than 50% capacity, etc.)	❑ Yes ❑ No ❑ N/A
Stakes spaced 6' apart and minimum 6" overlap between joints	❑ Yes ❑ No ❑ N/A

Temporary Sediment Basins/ Sediment Traps:

Required below disturbed areas with >5-acre drainage basin	❑ Yes ❑ No ❑ N/A
Designed for 5-yr/24-hr storm event	❑ Yes ❑ No ❑ N/A
Installed per design and specifications (outlet structure, etc.)	❑ Yes ❑ No ❑ N/A
Basin(s) being maintained (less than 50% capacity, etc.)	❑ Yes ❑ No ❑ N/A
Temporary berm (levee) in good condition (no erosion rills, etc.)	❑ Yes ❑ No ❑ N/A

Discharge Locations:

Sediments being maintained onsite	❑ Yes ❑ No ❑ N/A
Outlets free of obstructions (sediment, litter, etc.)	❑ Yes ❑ No ❑ N/A
Riprap and filter cloth properly installed	❑ Yes ❑ No ❑ N/A
Check dams required/installed according to plans and specifications	❑ Yes ❑ No ❑ N/A

Materials Storage Areas:

Debris and stockpiles maintained properly (covered, etc.)	❑ Yes ❑ No ❑ N/A
Construction site free of spills	❑ Yes ❑ No ❑ N/A

Other:

Streets free of sediment and debris	❑ Yes ❑ No ❑ N/A
Inlet protection properly installed and maintained	❑ Yes ❑ No ❑ N/A
Offsite areas free of adverse impacts due to construction (litter, silt, etc.)	❑ Yes ❑ No ❑ N/A
Sanitary facilities onsite	❑ Yes ❑ No ❑ N/A
Pollution Prevention Plan onsite	❑ Yes ❑ No ❑ N/A
60-foot buffer zone from top of stream bank maintained	❑ Yes ❑ No ❑ N/A

6.0 STORM WATER POLLUTION PREVENTION PLAN

6.1 Memphis and Shelby County Requirements

TDEC has specific requirements for any SWPPP that is part of the NPDES permit program. TDEC requires a contractor to submit a SWPPP for construction sites that disturb 1 acre or more, using the instructions under the statewide NPDES General Permit for Construction Storm Water. TDEC also requires a SWPPP for industrial activity with the potential to pollute waters of the state, using the instructions under the statewide NPDES General Permit for Industrial Storm Water. See the TDEC web site listed in Chapter 8 for additional information on these two general statewide permits and how to obtain coverage. The TDEC web site also has a summary of environmental permits that are required to meet state and federal regulations.

As part of the process of obtaining a NPDES Permit (construction or industrial), an NOI must be filed with the Memphis and/or Shelby County within 60 days of being issued by TDEC. TDEC permit holders must make SWPPPs available to Memphis and/or Shelby County upon request.

Memphis and Shelby County have the right to require a SWPPP be prepared, even when not required by TDEC, on the basis of: 1) sound engineering judgment, 2) type of business, or 3) a history of water pollution at this site or by this owner/operator at other sites. Typical properties or land uses that may require a SWPPP include:

- Vehicle fueling stations
- Vehicle service and maintenance facilities
- Vehicle and equipment cleaning facilities
- Fleet storage areas (for cars, buses, or trucks)
- Industrial and manufacturing sites
- Outdoor loading/storage/transfer facilities
- Salvage and recycling facilities (including junkyards)
- Marinas and boat maintenance facilities
- Commercial nurseries

The remainder of this section addresses requirements for preparing a SWPPP when required by the Memphis and/or Shelby County, but not by TDEC. SWPPP requirements are generally the same as described in the cited Tennessee Rule and in two U.S. Environmental Protection Agency (USEPA) documents that are both subtitled, “Developing Pollution Prevention Plans and Best Management Practices” (references 137 and 138).

The life history of a SWPPP includes three phases:

1. Site Evaluation
2. Planning and Design
3. Implementation and Monitoring

Preparing a SWPPP involves the first two phases of the life history but requires careful consideration of how the third phase will be handled. The SWPPP shall include a methodology for adding letters, memos, inspection reports, monitoring data, maintenance records, leak/spill information, etc. The SWPPP is intended to be a living document that will serve the site owner/ operator in meeting many environmental needs.

6.2 Phase 1: Site Evaluation

This requirement is intended to be a one-time event if a SWPPP is maintained properly. If the SWPPP is not maintained properly, then a complete site evaluation may be required again whenever new construction or redevelopment takes place.

Step 1: Select a pollution prevention team. A specific individual will be in charge of developing and maintaining the SWPPP. At a minimum, there must be one other team member who is familiar with the specifics of the SWPPP and who can take charge in the absence of the leader. Pollution prevention team members must be aware of all activities at the site. For large project sites, there may be many pollution team members.

Step 2: Conduct a site assessment, including a review of all available information and records. A site map must be developed that includes all known structures, drainage features, material storage, known leaks and spills, historical information such as date of construction, etc. Additional items to be shown include soil types, vegetation, contours, drainage outfalls, size and material of storm water pipes and manholes, floor drains, parking areas, and method of roof drainage. The site map must be drawn to scale, legible, properly labeled, and reproducible.

Step 3: Develop a comprehensive materials inventory to include material safety data sheets (MSDS). All materials and liquids should be included on the list, no matter how small the quantity involved. The list should include the name of material, location stored, type of container, volume of material, use of material, safeguards in place to prevent pollution, and whether a MSDS is required. The list should also indicate which materials are exposed to storm water and the quantities involved.

Step 4: Identify all non-storm-water discharges, including past spills and leaks. A non-storm-water discharge is any material that is released intentionally or unintentionally to the ground surface, to a storm drain system, or to a natural channel. Concrete truck washout must follow the guidance in BMP AM-18 (Concrete Waste Management). Provide a list of significant spills and leaks that have occurred within the last 3 years, using the federal definition of a reportable quantity. A reportable quantity of each material can be defined using the federal regulations contained in 40 CFR 302.4, 40 CFR 117.21, and 40 CFR 110.10.

Step 5: Provide monitoring data to identify non-storm-water discharges, past spills and leaks, and the current level of pollution from the various site outfalls. Storm water sampling must be conducted for parameters deemed to be important by Memphis and/or Shelby County. The parameters are subject to change: 1) from watershed to watershed, 2) over a period of time, and, 3) as directed by TDEC or the USEPA. Therefore, it is essential to contact the Memphis and/or Shelby County storm water programs for further guidance on storm water sampling parameters.

Step 6: Evaluate the gathered data and to write a site evaluation summary. The use of electronic drawings and spreadsheets is encouraged and will generally allow the SWPPP preparer to make changes as necessary. The narrative should concentrate on activities with a high potential for contaminating storm water.

6.3 Phase 2: Planning and Design

What changes can be made to improve storm water quality? What can be done to reduce the possibility of a spill or release? How can monitoring and sampling be made easier and more consistent?

Step 1: Identify BMPs and good housekeeping practices necessary to improve operations. The most effective BMP is to hire good employees and to provide them with consistent training. An employee training manual, as part of a well-designed training program, can be a simple and cost-effective method to ensure good housekeeping practices.

Step 2: Identify ways to improve work methods and ways to reduce storm water pollution. The second-most effective BMP is to use the proper equipment and materials. For instance, a commercial or industrial site should consider equipment upgrades and improvements as necessary. A construction site should identify erosion and sediment control measures. Most sites should consider the use of storm water control measures (grass buffer zones, detention basins, oil-water separators) to reduce storm water pollution leaving the site.

Step 3: Design a program for operation and maintenance, including regularly scheduled inspections and testing. Record keeping is essential to this program; an electronic database is almost a necessity for many types of sites. Ensure that inspection records have a standard format with complete information, in case of an audit. Inspection records must be kept for at least three years.

Step 4: Design a spill prevention and response program. Safety measures and emergency contact telephone numbers must be identified and then posted on the site for quick use. Include procedures for notifying regulatory authorities (Memphis or Shelby County, TDEC) and emergency responders (police, fire, hospital). Describe spill containment, isolation, and cleanup measures that would be used. Although the Memphis and Shelby County fire departments can assist with spill or leak containment, the responsible party will be expected to remediate any pollution. It is highly recommended that a spill response program include remediation contractors or emergency response contractors, such as are listed in Table AM-07-1.

6.4 Phase 3: Implementation and Monitoring

This phase essentially involves the actual implementation of the plan and design developed in Phase 2. It may be necessary to develop an implementation schedule and cost estimate if some items are being phased.

Step 1: Train employees properly in accordance with a good employee training program that is carefully documented, typically with tests or quizzes. State and federal agencies, depending on materials involved or the type of business may mandate additional training requirements.

Step 2: Use the BMPs identified previously in the SWPPP. Proper construction and installation is important to ensure proper function. Document each item as it is being installed; pictures are generally preferable to supplement sketches. Correctly store all written operating procedures, repair manuals, spare parts, and receipts for immediate use and/or reference.

Step 3: Purchase a spill containment kit or materials. Train all personnel about where materials are stored, when to use spill containment, emergency notification procedures, and the disposal of used spill containment materials.

Step 4: Inspect and maintain the site as described in the design phase. Inspection duties must be assigned to a responsible person in order to ensure proper inspection schedules and record keeping.

6.5 SWPPP Preparation Guidance

The following checklist is a short version containing some of the typical elements for SWPPP preparation. Additional information may be necessary due to the nature of the site. The TDEC web site has guidance on preparing a SWPPP for construction sites and for industrial sites. The USEPA documents for preparing pollution prevention plans (references 137 and 138) contain additional checklists and examples.

1. Complete site description, address, and purpose
2. Pollution prevention team with complete contact information
3. Signature page for responsible persons
4. Pertinent project correspondence and project history
5. Description of potential pollutant sources
6. Existing topography, grading, vegetation
7. Information on soils and groundwater
8. Site drainage map, including outfall locations and sinkholes
9. Existing and proposed drainage structures (size, material, dimensions, etc.)
10. Material storage areas
11. Inventory of exposed materials within the last three years ***
12. List of known spills and leaks within the last three years ***
13. List of non-storm-water discharges within the last three years ***
14. Sampling data within the last three years ***
15. Good housekeeping measures and BMPs
16. Inspection and maintenance schedule
17. Inspection and maintenance records
18. Spill prevention and response procedures
19. Material safety data sheets
20. Inventory and location of spill prevention materials
21. Employee training
22. Record keeping and reporting procedures
23. Copy of NPDES permit and/or application

*** The SWPPP shall include an appendix to keep ongoing records of all known spills, leaks, and non-storm-water discharges indefinitely.

7.0 POST-CONSTRUCTION RUNOFF CONTROL

As detailed in Appendix C of Volume 1 of the SWMM: Policy Manual, Memphis and Shelby County require a Storm Water BMP Operation and Maintenance (O&M) Agreement for any new development or significant redevelopment that includes post-construction BMPs that require long-term operation and maintenance. The O&M Agreement comprises an Inspection and Maintenance Agreement signed by the developer or BMP owner and the preparation of a PCRC Plan.

The PCRC Plan must include a description of the storm water system and its components, inspection priorities and inspection schedule for each component, and a schematic for each BMP.

Purposes of the PCRC Plan:

- To inform property owners about the system components on their properties, so that they will know the locations and maintenance needs of the components and structural BMPs

- To facilitate inspections

- To obtain storm water credits for BMPs (under the storm water enterprise fund)

- To ensure adequate operation and maintenance of post-construction BMPs that require maintenance (e.g., detention and retention ponds, including underground detention structures)

Requirements of the PCRC Plan:

The PCRC Plan is required for all development or significant redevelopment that includes the construction of post-construction storm water BMPs that require long-term operation and maintenance. The PCRC Plan must be submitted by the design engineer or plan designer as a separate plan sheet (and detail sheet if needed) in the plan set submitted to the Technical Committee for review. The PCRC Plan must include or address the following elements:

- Description and locations of storm water system components to be inspected, prepared by the engineer.

- Schedule of inspections and the techniques used to inspect and maintain the systems to ensure that they are functioning properly as designed. Documentation checklists for each type of BMP, including the inspection schedule and potential maintenance items that

must be addressed. Templates for checklists are found in Appendix C of Volume 1 of the SWMM: Policy Manual.

- Where and how the trash, sediment, oil, and other vehicle fluids and other pollutants removed from the storm water system will be disposed. This should include any parameters listed in the TDEC 303(d) list for the water bodies into which the development discharges and for which the development could be a reasonable source.

- Schematics of BMPs located on the site, including outlet structure details indicating design storm event.

- Person(s) and phone number(s) responsible for inspection and maintenance. If the organization that will be responsible is yet to be organized, list the name, address, and phone number of the person or entity with interim responsibility.

- Provisions for permanent access and maintenance easements.

- The PCRC Plan shall be signed and sealed by a Tennessee registered professional engineer.

- The PCRC Plan shall certify compliance with all required state or federal storm water permits.

General Information Requirements for PCRC Plans:

1. Intended use of the development (e.g., single-family residential, office park, etc.)
2. Vicinity map based on a USGS quadrangle map (adjusted to appropriate scale)

Site Information Summary Block Requirements for PCRC Plans:

1. Total site area (acreage).

2. Impervious area (square feet).

3. Dedicated open space (acres).

4. Total drainage area entering storm water detention (acres) [this number includes any offsite drainage area that is received].

5. Total drainage area (onsite only) entering storm water detention (acres).

6. Total onsite drainage area entering a water quality BMP.

7. Total combined offsite and onsite area entering a water quality BMP.

8. Tax ID number of the property.

9. If located within a larger development, state whether or not the discharge from the site flows into another detention structure farther downstream.

10. Indicate the name of the stream or water body that receives the discharge.

PCRC Plan Review Information:

Changes in the PCRC Plan may be required based on the review of the plan. In addition, supporting data/supplemental information may be required. It is expected that the PCRC Plan will be a modified version of the Grading and Drainage Plan being submitted and that a combination of structural and/or nonstructural BMPs shall be employed. Structural BMPs shall include, but not be limited to, grass swales and detention/retention ponds. In-ground premanufactured water quality units will be evaluated on a case-by-case basis. Nonstructural BMPs shall include but not be limited to administrative programs, street sweeping, employee training, material/waste handling practices, and measures to isolate pollutants from storm water (such as putting a roof over gasoline pump islands.) Note that the PCRC plan review will not cover non-storm-water quality elements related to the design such as load-bearing capacity, flooding potential, etc.

A "Standard PCRC Plan" for use as a guide may be obtained from the City of Memphis Division of Public Works or the Shelby County Department of Public Works. If you have any questions, contact the City at (901) 576-4349 or the County at (901) 545-4320.

PCRC As-Built Plan Requirements:

Before bonds will be released for new construction, a PCRC Plan with an as-built survey, certified by a licensed professional engineer as appropriate, must be submitted as georeferenced, electronic files for all public and private storm water management facilities. The licensed professional shall certify how the facilities should be operated, maintained, and inspected to continue to function as designed and must include the demonstration of fiduciary responsibility for ongoing maintenance. The licensed professional shall certify on the as-built plan that the facilities

have been constructed in substantial and essential conformance to the design plan. As-built capacities must be verified with a survey. It is understood that as-builts will not include final grading by homebuilders on individual lots; however, the storm water infrastructure and direction to homebuilders and homebuyers regarding passive paths conveying storm water flows must be included.

PCRC Plan Annual Reports:

Annual inspection and maintenance reports are due to the City and/or County by July 1 of each year. Storm water BMP inspection checklist templates for typical post construction BMPs that require maintenance are contained in Appendix C of Volume 1 of the SWMM: Policy Manual. The inspection checklists can serve as annual reports. The template checklists are a general guideline of inspection elements; however, engineers may modify checklists to include inspections and maintenance elements as needed.

8.0 LIST OF RELATED WEB SITES

The following web sites are useful in understanding and applying BMPs in accordance with the BMP Manual. The first three sections contain web sites for local, state, and federal governments. Most of these Web sites contain laws and regulations that apply to all citizens and entities within the City of Memphis and Shelby County. These Web sites represent some of the general information available from the local, state, and federal governments. Users of this BMP Manual are encouraged to research particular topics of interest to them.

The last section has various informational sites that may suggest better ways and methods for implementing BMPs. A common reaction to local implementation of BMPs and pollution prevention measures is that it seems to be excessive and that other cities and states are not burdened by these regulations. BMPs are generally required for most large and medium-size municipalities with some differences in target development dates. BMPs are mandated as part of the issued NPDES storm water permits for the City of Memphis and Shelby County by TDEC.

The history of BMPs across the United States demonstrates that water pollution measures are making a significant difference in coastal waters (such as the Chesapeake Bay or Puget Sound) and in urban streams (such as the San Antonio River in downtown San Antonio). Closer to home, the cities of Knoxville, Nashville, and Chattanooga are also required to enact BMPs to improve water quality. It is greatly desired that this BMP Manual will contribute to the quality of life in communities near streams throughout the City of Memphis and Shelby County and also downstream along the Mississippi River.

8.1 Web Sites for the City of Memphis and Shelby County

a) http://www.stormwatermatters.com

This Web site is the storm water portal for both the City and the County. The BMP Manual is posted at this web site for quick and easy use by all citizens of Memphis and Shelby County, and the surrounding communities. Each page of the BMP Manual contains the month and year of issue that represent the current version. This information is also listed on the menu page for the online BMP Manual. The other volumes of the SWMM are posted at this Web site, as well as typical engineering details and standard specifications. The portal also links to the City of Memphis and Shelby County storm water programs, lists general telephone numbers for the various divisions within the Engineering Departments, and has information concerning the Water Quality Hotlines for both MS4s.

In addition, Memphis and Shelby County storm water programs have their own Web sites in addition:

www.cityofmemphis.org
www.shelbycountytn.gov

b) http://www.dpdgov.com

This Memphis and Shelby County Division of Planning and Development Web site contains plan review process information for the City of Memphis and Shelby County. The site includes online geographical information system (GIS) mapping information for the community.

c) Other Local MS4s:

— Germantown at http://www.ci.germantown.tn.us/communitydevelopment.html
— Collierville at http://www.collierville.com/gov_pub.html
— Bartlett at http://www.cityofbartlett.org
— Millington at http://www.cityofmillington.org
— Lakeland at http://www.lakelandtn.org
— Arlington at http://www.townofarlington.org

8.2 Web Sites for the State of Tennessee Government

a) http://www.state.tn.us/environment/

This Web site contains general information for TDEC along with links for further information such as a contact list for emergency numbers. The Web site has links to various divisions within TDEC as well as a site index with alphabetical list of contents (starting with aboveground storage tanks).

b) http://www.state.tn.us/environment/permits/

This Web site contains a list of environmental permits issued by TDEC along with links for further information. Environmental permits are classified under these categories: Air, Water, Waste, Radiological, and Natural Resources.

c) http://www.state.tn.us/environment/wpc/publications/

This Web site contains a list of publications which are available from the Division of Water Pollution Control, which is an entity within TDEC. In addition, the web site has links to the various state laws and regulations that involve water pollution control.

d) http://www.state.tn.us/environment/permits/cheklst.php

This Web site contains a checklist of various environmental considerations, along with the appropriate state or local government agency that can be contacted for further information.

e) http://www.state.tn.us/environment/wpc/publications/Streambank/strmbank.shtml

This Web site is titled "A Landowner's Guide to Streambank Protection and Stabilization." It has permit information, common questions, and an information video.

f) http://www.state.tn.us/environment/nh/species

This Web site contains the list of rare species found in Tennessee, as compiled by the Division of Natural Heritage. The list includes the federal status and state status of each species when available.

g) http://www.tdot.state.tn.us/construction

This Web site contains the TDOT Standard Specifications for Road and Bridge Construction, issued March 1995. This publication has erosion control practices and materials required on TDOT projects and by many local projects.

h) http://www.tdot.state.tn.us/Chief_Engineer/engr_library/design/Std_Drwg_Eng.htm

This Web site contains the TDOT Standard Drawings grouped under several categories. Of principal interest to BMP designers are all types of drainage structures, catch basins, manholes, culverts, landscaping practices, tree walls, sediment basins, and various other erosion control devices.

8.3 Web Sites for the United States Government

a) http://www.epa.gov/owm/mtb/mtbfact.htm

This USEPA Web site contains a comprehensive series of Municipal Technology BMPs under several categories including storm water, wastewater, and combined sewer overflows and storm water.

b) http://www.epa.gov/opptintr/library

This Web site contains a comprehensive series of publications (available for downloading in HTML or PDF formats) that deal with pollution prevention measures. Some publications are for various industries, such as printers and garment cleaning.

c) http://www.epa.gov/epahome/comm.htm

This Web site contains USEPA public databases that allow direct access to environmental information on air quality, chemicals, facilities information and addresses, hazardous waste, toxic releases, and drinking water quality. The databases are linked to a mapping feature to provide local data whenever queried. There are additional features to allow customized reports and data.

d) http://www.epa.gov/opptsmnt/

This Web site contains public information and publications from the USEPA Office of Prevention, Pesticides & Toxic Substances. Topics addressed include household chemicals, lead-based paints, pesticides and food. Includes access to 40 CFR (Protection of Environment).

e) http://www.epa.gov/epahome/lawregs.htm

This Web site contains a list of USEPA laws and regulations along with links to a summary and full text of each law and regulation. It contains access to the entire United States Code.

f) http://www.epa.gov/clariton/clhtml/pubtitle.html

This Web site contains a list of downloadable and printable USEPA documents, including references 137 and 138 concerning preparation of SWPPPs for construction and industrial activities.

g) http://www.fhwa.dot.gov/engineering/hydraulics/library_listing.cfm

This Web site contains a growing list of Federal Highway Administration design manuals that can be ordered online, including many documents that can be downloaded at no cost in Adobe Acrobat PDF format. Two very useful manuals are reference 158 (Hydraulic Design of Highway Culverts) and reference 160 (Hydraulic Design of Energy Dissipaters for Culverts and Channels).

g) http://www.wcc.nrcs.usda.gov/hydro/hydro-tools-models-tr55.html

This Web site has a free downloadable Acrobat PDF file of Technical Release 55, published by NRCS (formerly known as the Soil Conservation Service) in June 1986. TR-55 is the basic document for defining NRCS drainage computations as required by Memphis Storm Water and Street Ordinance. The TR-55 computer program can also be downloaded, but is of limited value and does not perform detention routing.

h) http://www.wcc.nrcs.usda.gov/wtec/

This NRCS Web site contains the Watershed Technology Electronic Catalog, with a variety of publications and AutoCAD drawings to download. Categories include pollution control, hydraulic structures, plants, erosion, watershed details, etc.

i) http://www.wcc.nrcs.usda.gov/hydro/hydro-techref-neh-630.html

This Web site contains Part 630 (Hydrology) of the National Engineering Handbook, a classic reference on NRCS hydrology methods, drainage design, hydrograph selection and flood routing.

j) http://websoilsurvey.nrcs.usda.gov/app/

Shelby County's soil survey is available on the internet at "Web Soil Survey" allows you to produce a customized soil survey for your site.

8.4 Miscellaneous Web Sites

a) http://www.nashville.gov/storm water/index.htm

This Web site contains the storm water quality management program for the Department of Public Works for metropolitan Nashville. This web site also describes the various programs in Nashville (Illicit Investigation, Field Screening, Ambient Sampling, Wet Weather Sampling, Construction Inspection) that are very similar to those required of Memphis and Shelby County.

b) http://www.chattanooga.gov

This Web site contains information for the storm water management program in the City of Chattanooga, such as BMP brochures, contact information, and a list of the various programs. Chattanooga has a different approach than the other large cities in Tennessee, in that it collects a storm water utility fee from landowners to provide storm water services. Chattanooga has required the capture of 0.75" first flush runoff volume with a release time of four days, and has also mandated sand filtration units for detention pond design.

c) http://www.casqa.org/resourcelibrary

This Web site contains various links to local governments (cities and counties from across the U.S.) with storm water programs similar to the City of Memphis and Shelby County. Southeastern cities similar in size to Memphis (in addition to Nashville and Chattanooga) include: Birmingham, Alabama;, Louisville. Kentucky; Charlotte, North Carolina; Charlottesville, Virginia; and others.

d) http://www.cis.utk.edu/

This Web site represents the University of Tennessee Center for Industrial Services and contains a variety of methods to assist businesses and industries. In particular, it has

additional Web links to many environmental sites to obtain publications, checklists, Standard Industrial Classification codes, etc. Information includes checklists of required business permits, information on recycling and waste reduction, and design guidance.

e) http://bioengr.ag.utk.edu/rusle2/download.htm

This Web site has a current version of RUSLE2 software is available for download at no cost.

f) http://www.utextension.utk.edu/publications/

This Web site contains many publications from the University of Tennessee Agricultural Extension Office. The Shelby County office is located at the Agricenter. The agricultural extension office has many free brochures and pamphlets concerning trees, grasses, forestry, horticulture, crops, and gardening. This office is also an excellent source of information for pest control, fishing, and environmental issues. Some publications are available online, generally in Adobe Acrobat PDF format.

g) http://www.bmpdatabase.org/

This Web site represents a national database of BMP performance statistics. It is being developed under the sponsorship of USEPA and the American Society of Civil Engineers. This database will continue to grow as additional data and statistics are submitted by local and state governments. Storm water pollutants are grouped into 12 categories.

h) http://www.igin.com/

This Web site (Irrigation & Green Industry Network) provides guidance for chemicals, power equipment, tree care, pesticides, and fertilizers. It also contains a glossary of various trees, shrubs, vines, bedding plants, and groundcover under the name Plant Search.

i) http://www.ehso.com/

This Web site (Environmental Health and Safety Online) is a comprehensive information source on federal regulations, emergency response, hazardous waste, chemicals, training, solid waste, and many other topics.

9.0 GLOSSARY OF TERMS

The following terms are included as a quick reference and to clarify meanings of words used in the BMP Manual. Some definitions pertaining to sanitary sewers are also included to emphasize that sanitary wastewater is an illicit discharge under all circumstances. See the other volumes of the SWMM for additional terms.

Aquifer — An underground geological formation that contains usable amounts of groundwater to supply wells or springs. The formation usually contains a stratum of sand, gravel, or fractured rock and will transmit water readily.

Bacteria — Single-celled microorganisms that lack chlorophyll. Bacteria are essential to all ecological habitats but some types are hazardous to human and animal life.

Baseflow — The portion of stream discharge that consists of underground water drainage and springs.

Benthic — Relating to or occurring at the bottom of a body of water, such as a stream or lake.

Best management practice — A method or activity that is determined to be the best solution to preventing the amount of pollution generated by nonpoint sources. BMPs are selected on the basis of existing site conditions and the economic/social/technical feasibility.

Biochemical oxygen demand — The quantity of oxygen consumed by biochemical oxidation of organic matter within a sample of water in a specified time and temperature. A typical value for BOD5 (a five-day test of a sample) at 20° C is 5 milligrams per liter. Oxygen is added to the sample so that the BOD measurement is not limited by the amount of available oxygen.

Blue-line stream — Any stream, creek, lake, pond or other body of water shown as a blue line on a 7.5 minute USGS quadrangle map, or any point downstream from where the blue line initially begins.

Chemical oxygen demand — The quantity of oxygen consumed by chemical oxidation of organic and inorganic matter within a sample of water in a specified time and temperature. Similar to BOD test, but value of COD is always equal to or greater than BOD.

Coliforms — Any of a number of organisms commonly found in the intestinal tract of humans and animals. The presence of coliforms is used as an indicator of potentially dangerous bacterial contamination.

Design storm — A typical rainfall event that is used to design a storm water structure. It is designated by the rainfall frequency (i.e., 10-year), the rainfall duration (i.e., 24-hour), and the type of rainfall distribution (i.e., NRCS Type II).

Detention — A practice to store storm water runoff by collection as a temporary pool of water and provide for its gradual (attenuated) release and thereby controlling peak discharge rates.

Development — To make a site available for use by physical alteration. Development includes but is not limited to providing access to a site, clearing of vegetation, grading, earthmoving, providing utilities and other services such as parking facilities, storm water management and erosion control systems, potable water and wastewater systems, altering land forms, or construction or demolition of a structure on the land.

Discharge — To dispose, deposit, spill, pour, inject, seep, dump, leak, or place by any means including direct or indirect entry of any solid or liquid matter into the municipal separate storm drain system, intentional or otherwise.

Dissolved oxygen — The concentration of free oxygen in water that has not been chemically combined. This parameter is vital to fish and other aquatic life. Low levels of dissolved oxygen indicate high levels of pollution.

Erosion — The removal of soil particles by the action of water, wind, ice, or other geological agents, whether naturally occurring or acting in conjunction with man-made activities or effects.

Extended detention — A practice to store storm water runoff by collection as a temporary pool of water and provide for its gradual (attenuated) release over a minimum of 24 hours and no more than 72 hours, and thereby control peak discharge rates and allow for gravity-driven settling of some types of pollutants.

Fecal coliform — Type of coliform usually known as Escherichia coli (E. coli) and related bacteria. E.coli is used as the basis of the coliform count, which is used as an indicator of water with fecal pollution and potentially dangerous pathogens.

First flush — The initial or early stages of storm water runoff that commonly delivers a disproportionately large amount of previously accumulated pollutants due to the rapid rate of runoff. The first flush is usually defined as a volume equaling the first one-half inch of direct runoff from the entire contributing onsite drainage basin.

Floodplain — For a given flood event, that area of land that is temporarily covered by water and that adjoins a watercourse and is necessary for the conveyance of the given flood event.

Good housekeeping — Keeping a clean, orderly construction site. One of the first steps towards preventing storm water contamination is improving housekeeping practices and using common sense. Good-housekeeping practices reduce the possibility of accidental spills, improve response time if there is a spill, and reduce safety hazards as well.

Heavy metals — Metals with a high molecular weight and high density. Heavy metals in relatively low concentrations are toxic to humans and animals. Examples include arsenic, mercury, and lead.

Hydraulic — Pertaining to, involving, moved, or operated by a fluid (especially water) under pressure or under a gravity-driving force.

Hydrologic — Pertaining to the scientific study of the properties, distribution, and effects of water on the earth's surface, in the soil and underlying rocks, and in the atmosphere.

Hydrograph — A graph of the time distribution of runoff from a watershed.

Hyetograph — A graph of the time distribution of rainfall from a watershed.

Illicit discharge — Any discharge to the storm water system that is not composed entirely of storm water and is not specifically exempted by the Storm Water Ordinances of the City of Memphis and Shelby County.

Impervious area — Impermeable surfaces, such as pavement or rooftops, that prevent the percolation of water into the soil and provide almost 100% runoff volumes.

Infiltration — A practice designed to promote the recharge of groundwater by containment and concentration of storm water in porous soils.

Infiltration basin — An impoundment made by excavation or embankment construction to contain and infiltrate runoff into the soil layer.

Intermittent stream — A stream that only flows part of the time. Flow may occur for an extended time due to seasonal rainfall and high groundwater, but it dries up during the summer.

Major storm — A storm which corresponds to a 100-year design storm or a storm that has a one% probability in any given year.

Municipal Separate Storm Sewer System (MS4) — The total system of storm water drainage conveyances within a municipal entity (City of Memphis and Shelby County are each separate MS4s) for which NPDES permits have been issued by the State of Tennessee for the purpose of reducing storm water pollution to the maximum extent possible. Memphis and Shelby County have the right to inspect all storm water drainage conveyances, whether located on public property or private property, in accordance with the City and County Storm Water Ordinances.

National Pollutant Discharge Elimination System (NPDES) — A nationwide system of storm water permitting, established by the USEPA and administered locally by the TDEC. The City of Memphis and Shelby County are required to address specific areas of storm water pollution as part of their NPDES permits.

National Resources Conservation Service (NRCS) — An organization within the U.S. Department of Agriculture that has published standard drainage procedures in the form of a publication called Technical Release No. 55 (commonly known as TR-55). Formerly known as the Soil Conservation Service (SCS).

Non-point source pollution — Pollution that does not appear to have a single source (such as an industrial outfall pipe or a gasoline tanker spill, which are point sources). Generally nonpoint source pollution is caused by rainfall upon human activities or upon a polluted surface.

Operator — The owner or contractor of a site who has control over everything that happens at the site. The operator is responsible for complying with storm water regulations in accordance with a NPDES permit or a SWPPP.

Outfall — The terminus of an enclosed storm drain system where the storm water is released to an open channel.

Peak flow — The maximum instantaneous rate of flow of water at a particular point resulting from a storm event.

Peak flow attenuation — The reduction of the peak discharge of a storm due to storm water detention.

Perennial stream — A stream that normally has water all year round.

Plat, final — An official survey instrument to be placed in the pubic records of Memphis and/or Shelby County and construction drawings of roads, utilities, site development, public improvements, detention basins, and other storm water structures.

Retention — A practice designed to store storm water runoff by collection as a permanent pool of water without release except by means of evaporation, infiltration, or attenuated release when runoff volume exceeds storage capacity of the permanent pool.

Riprap — A combination of large stone, cobbles, and boulders used to line channels, stabilize stream banks, and reduce runoff velocities.

Sanitary sewer — A system of underground conduits that collect and deliver sanitary wastewater to a wastewater treatment plant.

Sanitary wastewater — Human wastes carried by water from residences, buildings, industrial establishments or other places, together with such industrial wastes, washwater, or other unclean water generated by humans. Sanitary wastewater from residences typically comes from toilets, sinks, washing machines, and other plumbing fixtures.

Site development — See the definition for “Development.”

Storm water — Runoff from rain, snow, or other forms of precipitation, resulting in surface runoff and drainage.

Storm water system — The system of roadside drainage, roadside curbs and gutters, curb inlets, swales, catch basins, manholes, ditches, pipes, lakes, ponds, sinkholes, channels, creeks, streams, storm drains, and similar conveyances and facilities, both natural and man-made, located within the Memphis and Shelby County through which storm water is collected, stored, or conveyed, whether owned or operated by the municipality or another entity.

Swale — A natural or man-made depression or wide shallow ditch used to route or to filter runoff.

Time of concentration — The maximum time required for storm water runoff to flow from the most remote point of the watershed to the location being analyzed, not necessarily the longest distance away.

Total dissolved solids — The concentration of particles (mass per volume) that are present in a sample of water and that chemically react with water to form cations and anions.

Total maximum daily load (TMDL) — A quantitative report on the types of water quality problems and sources for a particular watershed. The TMDL includes permitted source point discharges and nonpoint source pollution.

Total suspended solids — The concentration of fine particles (mass per volume) that is present in a sample of water but are not chemically bound to the water molecules.

Vegetation — The collection of plant life (including trees, shrubs, bushes, and grass) that is found on a project site or property. Vegetation is desirable because it helps to reduce the quantity of storm water runoff, encourages sediment settling and nutrient uptake, controls extreme temperatures, and provides habitat for natural animals.

Wastes, industrial/commercial — Liquid or other wastes resulting from any process of industry, manufacture, trade or business, or from the development of any natural resources.

Wastes, other — Decayed wood; sawdust; shavings; fallen bark; fallen leaves; lawn clippings; animal wastes; used or previously applied lime; garbage; trash; refuse; loose used paper, paper products, plastic containers, or metal containers; ashes, offal, discarded tar; discarded paint;

discarded or uncontained solvents; used, discarded, or spilled petroleum products, antifreeze, motor vehicle fluids; used or discarded tires, gas tanks, or chemicals; or other materials that are not allowed to be discharged to or otherwise enter the storm water system.

Watershed — The area that drains to a particular stream or to a particular point. A watershed is bounded by drainage divides.

1-year frequency storm — A storm event defined to be 3.3 inches in 24 hours using the Technical Paper No. 40 (TP-40) rainfall distribution, or as established by Memphis and/or Shelby County based upon scientific and engineering information.

2-year frequency storm — A storm event with a 50% chance of being equaled or exceeded in a given year. Defined to be 4 inches in 24 hours using the TP-40 rainfall distribution, or as established by Memphis and/or Shelby County based upon scientific and engineering information.

5-year frequency storm — A storm event with a 20% chance of being equaled or exceeded in any given year. Defined to be 4.9 inches in 24 hours using the TP-40 rainfall distribution, or as established by Memphis and/or Shelby County based upon scientific and engineering information.

10-year frequency storm — A storm event with a 10% chance of being equaled or exceeded in any given year. Defined to be 5.7 inches in 24 hours using the TP-40 rainfall distribution, or as established by Memphis and/or Shelby County based upon scientific and engineering information.

25-year frequency storm — A storm event with a 4% chance of being equaled or exceeded in any given year. Defined to be 6.5 inches in 24 hours using the TP-40 rainfall distribution, or as established by Memphis and/or Shelby County based upon scientific and engineering information.

50-year frequency storm — A storm event with a 2% chance of being equaled or exceeded in any given year. Defined to be 7.1 inches in 24 hours using the TP-40 rainfall distribution, or as established by Memphis and/or Shelby County based upon scientific and engineering information.

100-year frequency storm — A storm event with a 1% chance of being equaled or exceeded in any given year. Defined to be 8 inches in 24 hours the TP-40 rainfall distribution, or as established by Memphis and/or Shelby County based upon scientific and engineering information.

10.0 LIST OF REFERENCES

The original version of this manual was prepared for the City of Knoxville in March 2000 by Camp Dresser & McKee (CDM), Inc. The first 147 references were used by CDM in the preparation of the BMP Manual. Additional references were added to the list as necessary by the City of Knoxville, the City of Memphis, and Shelby County to update the BMP Manual. The BMP fact sheets refer to the list of references by using the reference numbers only. In each case, it is the intention of the City of Memphis and Shelby County to give appropriate credit whenever possible.

1. Adams, L., L.E. Dove, D.L. Leedy, and T. Franklin, *Urban Wetlands for Storm Water Control and Wildlife Enhancement — Analysis and Evaluation*, Urban Wildlife Research Center, Columbia, Maryland, 1983.

2. Adolphson Associates, *Storm Water Evaluation, Clover/Chambers Basin Ground Water Management Program,* for the Tacoma-Pierce County Health Department, 1989.

3. Adolphson Associates, *Subsurface Storm Water Disposal Facilities,* Interim report for the Tacoma-Pierce County Health Department, 1991.

4. Alameda County Urban Runoff Clean Water Program, *Best Management Practices for Storm Drainage Facilities,* (draft by Maintenance Subcommittee), 1992.

5. American Iron and Steel Institute (AISC), *Handbook of Steel Drainage & Highway Construction*, 1983.

6. American Petroleum Institute (API), *Design and Operation of Oil-Water Separators*, Publication 421, 1990.

7. American Public Works Association, *Street Cleaning Practice*, 1978.

8. Association of Bay Area Governments (California), *Manual of Standards of Erosion and Sediment Control Measures*, June 1981.

9. Austin (city of), Texas, *Environmental Criteria Manual*, 1989.

10. Austin (city of), Texas, *Removal Efficiencies of Storm Water Control Structures*, 1990.

11. Bellevue (city of), Washington, *Water Quality for Construction Businesses*.

12. Branion, R., *Principles for the Separation of Oil Drops from Water in Gravity Type Separators*, Department of Chemical Engineering, University of British Columbia.

13. California Air Resources Board, *California Air Pollution Control Laws*, 1992.

14. California Air Resources Board, *Prospects for Attaining the State Ambient Air Quality Standards for Suspended Particulate Matter (PM10), Visibility Reducing Particles, Sulfates, Lead, and Hydrogen Sulfide*, April 1991.

15. California Cooperative Agricultural Extension (CCAE), *Effluent Water for Turfgrass Irrigation*, Bulletin 21500, 1991.

16. California Cooperative Agricultural Extension (CCAE), *Selecting the Best Turf Grass*, Leaflet 2589, 1984.

17. California Cooperative Agricultural Extension (CCAE), *Turfgrass Water Conservation*, Bulletin 21405, 1985.

18. California Department of Toxic Substance Control (DTSC), *Hazardous Household Products: A Guide to the Disposal of Hazardous Household Products and the Use of Non-Hazardous Alternatives*.

19. California Department of Toxic Substance Control (DTSC), *Hazardous Waste Reduction Assessment Handbook — Automotive Repair Shops*, 1988.

20. California Department of Toxic Substance Control (DTSC), *Hazardous Waste Reduction Checklist — Automotive Repair Shops*, 1988.

21. California Department of Toxic Substances Control (DTSC), *Publications That Can Work For You!*, (a list and order form for waste minimization publications), 1991.

22. California Department of Toxic Substance Control (DTSC), *Waste Reduction for Automotive Repair Shops* (fact sheet), 1989.

23. California Department of Transportation, *Caltrans Highway Design Manual*, 1997.

24. California Department of Transportation, *CalTrans Standard Specifications: Section 10, Dust Control; Section 17, Watering; and Section 18, Dust Palliative.*

25. California Department of Transportation (Caltrans), *Storm Water Pollution Plan Handbook*, First Edition, Division of New Technology, Materials and Research, October 1992.

26. California Department of Water Resources, *Guidelines for the Design and Construction of Small Embankment Dams*, Division of Safety of Dams, March 1986.

27. California State Water Resources Control Board (SWRCB), *General Industrial Storm Water Permit*, 1992.

28. Camp Dresser & McKee, *Sevenmile Creek Basin Pilot Storm Water Quality Master Plan*, Report to Metropolitan Nashville and Davidson County, Tennessee, February 2000.

29. Camp Dresser & McKee, *Watershed Management Manual Version 3.30 Users Manual*, 1999.

30. Camp Dresser & McKee, Larry Walker Associates, Uribe & Associates, Resources Planning Associates, *Construction Activity Handbook, California Storm Water Best Management Practice Handbooks,* for the California Storm Water Quality Task Force (SWQTF), March 1993.

31. Camp Dresser & McKee, Larry Walker Associates, Uribe & Associates, Resources Planning Associates, *Industrial/Commercial Handbook, California Storm Water Best Management Practice Handbooks,* for the California Storm Water Quality Task Force (SWQTF), March 1993.

32. Camp Dresser & McKee, Larry Walker Associates, Uribe & Associates, Resources Planning Associates, *Municipal Handbook, California Storm Water Best Management Practice Handbooks,* for the California Storm Water Quality Task Force (SWQTF), March 1993.

33. Camp Dresser & McKee, Woodward-Clyde, Aguilar Engineering, Psomas & Associates, MK Centennial, *Construction Contractors Guide and Specifications, Caltrans Storm Water Quality Handbooks*, prepared for the California Department of Transportation, 1997.

34. Camp Dresser & McKee, Woodward-Clyde, Aguilar Engineering, Psomas & Associates, MK Centennial, *Construction Staff Guide, Caltrans Storm Water Quality Handbooks*, prepared for the California Department of Transportation, 1997.

35. Camp Dresser & McKee, Woodward-Clyde, Aguilar Engineering, Psomas & Associates, MK Centennial, *Planning and Design Staff Guide Update, Caltrans Storm Water Quality Handbooks*, prepared for the California Department of Transportation, 1997.

36. Chow, V.T., *Open Channel Hydraulics*, McGraw-Hill Inc., 1959.

37. Dewberry and Davis Inc., *Investigation of Potential Sediment Toxicity from BMP Ponds*, Northern Virginia Planning District Commission, 1990.

38. Enviro-Drain Inc., product brochures, Kirkland, Washington, 1992.

39. Faulkner, S., and C. Richardson, *"Physical and Chemical Characteristics of Freshwater Wetland Soils"*, in Constructed Wetlands for Wastewater Treatment, ed. D. Hammer, Lewis Publishers, 1989.

40. Federal Highway Administration (FHWA), *Retention, Detention, and Overland Flow for Pollutant Removal of Highway Storm Water Runoff*, Draft Report FHWA/RD-89/203, 1989.

41. Ferguson, B.K., *Urban Stream Reclamation*, Journal of Soil and Water Conservation, pages 324-328, 1991.

42. Field, R., H. Masters, and M. Singer, *Status of Porous Pavement Research*, Water Resources Research, Volume 16, Number 6, pages 849-858, June 1982.

43. Flood Control District of Maricopa County Flood Control District (Arizona), *Best Management Practices and Erosion Control Manual for Construction Sites*, September 1992.

44. Florida Concrete and Products Association, Inc., *Portland Cement Pervious Pavement Manual*, Publication 605, Orlando Florida.

45. Florida Department of Environmental Regulation, *The Florida Development Manual: A Guide to Sound Land and Water Management*, June 1988.

46. Florida Department of Transportation, *Maintenance Guidelines for Accumulated Sediments in Retention/Detention Ponds Receiving Highway Runoff*, 1991.

47. Galli, J., *Peat-Sand Filters: A Proposed Storm Water Management Practice for Urbanized Areas*, Metropolitan Washington Council of Governments (MWCOG), Publication 91702, December 1990.

48. Galli, John, *personal communication to Camp Dresser & McKee*, Metropolitan Washington Council of Governments (MWCOG).

49. Gburek, W.J., and J.B. Urban, *Storm Water Detention and Ground Water Recharge Using Porous Asphalt — Initial Results*, Proceedings of International Symposium on Urban Storm Water Runoff, Lexington, Kentucky, 1980.

50. GKY and Associates, *Outlet Hydraulics of Extended Detention Facilities*, for the Northern Virginia Planning District Commission, 1989.

51. Goforth, G.F., J.P. Heaney, and W.C. Huber, *Comparison of Basin Performance Modeling Techniques*, Journal of Environmental Engineering, ASCE Volume 109 (5), page 1082, 1983.

52. Golden Empire Health Planning Center, *Solvents, Chemical Hazards in the Home*, (brochure).

53. Golden Empire Health Planning Center, *Household Cleaners and Polishes:Chemical Hazards in the Home* (brochure).

54. Goldman S.J., K. Jackson, and T.A. Bursztynsky, *Erosion and Sediment Control Handbook*, Mc-Graw Hill Book Company, 1986.

55. Guntenspergen, G.R., F. Stearns, and J.A. Kadlec, *"Wetland Vegetation*," in Constructed Wetlands for Wastewater Treatment, ed. D. Hammer, Lewis Publishers, 1989.

56. Guo, J., and B. Urbonas, *Special Report to the Urban Drainage and Flood Control District on Storm Water BMP Capture Volume Probabilities in United States*, Denver, Colorado, 1995.

57. Hammer, Donald (editor), *Constructed Wetlands for Wastewater Treatment*, Lewis Publishers, 1989.

58. Hartigan, P., *personal communication to Camp Dresser & McKee*, Washington Department of Ecology (formerly with the City of Austin).

59. Horner, R.R., *Biofiltration Systems for Storm Runoff Water Quality Control*, Washington State Department of Ecology, 1988.

60. IEP Inc., *Vegetated Buffer Strip Designation Method Guidance Manual*, *Narragansett Bay Project*, prepared for USEPA and Rhode Island Department of Environmental Management, 1991.

61. Josselyn, M. (editor), *Wetland Restoration and Enhancement in California*, proceedings of a conference for California Sea Grant College Program, Institute of Marine Resources, University of California, 1982.

62. King County (Washington State), *Surface Water Design Manual*, 1990.

63. Kiowa Engineering Corporation, *Interim Erosion and Sedimentation Control for Construction Activities*, Urban Drainage and Flood Control District, Denver, Colorado.

64. Kleinschmidt, S.R., *Hydraulic Design of Detention Tanks*, Journal of Boston Society of Civil Engineers, Volume 48 (4), page 247, 1961.

65. Kulzer, L., *Water Pollution Control Aspects of Aquatic Plants*, Municipality of Metropolitan Seattle, 1990.

66. Lager, J.A., W.G. Smith, and G. Tchobanoglous, *Catchbasin Technology Overview and Assessment*, USEPA 600/2-77-051, May 1977.

67. Lettenmaier, D., and J. Richey, *Operational Assessment of a Coalescing Plate Oil-Water Separator*, Municipality of Metropolitan Seattle, 1985.

68. Limnion Corporation, *"Nutrient Removal Using a Submersed Macrophyte System"*, and *"Metals Removal Using a Submersed Macrophyte System"*.

69. Lindsey, G., L. Roberts, and W. Page, *Storm water Management Infiltration Practices in Maryland: A Second Survey*, Maryland Department of the Environment, June 1991.

70. Livingstone, Eric, *personal communication to Camp Dresser & McKee*, Florida Department of Environmental Conservation.

71. Maryland Department of Natural Resources, *Standards and Specifications for Infiltration Practices*, 1984.

72. Maryland Water Resources Administration, *Feasibility and Design of Wet Ponds to Achieve Water Quality Control*, 1986.

73. McCormick, C.D., F.M. Schmidt, and C. Hasty, *Retrofitting Existing Dry Ponds to Benefit Storm Water Quality*, Tennessee Society of Professional Engineers (TSPE) Professional Development Seminar, March 1999.

74. McPherson, J., *Water Quality BMPs: Catch Basin Infiltration*, presented to the APWA Storm Water Managers Committee, Tacoma, Washington, 1992.

75. Meiorin, E.C., *"Urban Runoff Treatment in a Fresh/Brackish Water Marsh in Fremont, California",* in Constructed Wetlands for Wastewater Treatment, ed. D. Hammer, Lewis Publishers, 1989.

76. Merritt, F.S., M.K. Loftin, and T.J. Ricketts, *Standard Handbook for Civil Engineers*, Fourth Edition, McGraw-Hill, 1996.

77. Metropolitan Washington Council of Governments (MWCOG), *A Current Assessment of Urban Best Management Practices: Techniques for Reducing Nonpoint Source Pollution in the Coastal Zone*, Publication #92705, March 1992.

78. Metropolitan Washington Council of Governments (MWCOG), *Nationwide Urban Runoff Program Pollution Removal Capability of Urban Best Management Practices in the Washington Metropolitan Area*, PB84-245497, 1983.

79. Miller, S., *Urban Runoff Quality and Management in Spokane*, Proceedings of the Northwest Nonpoint Source Pollution Conference, March 24-25, Seattle, Washington, 1987.

80. Minnesota Pollution Control Agency, *Protecting Water Quality in Urban Areas: Best Management Practices for Minnesota*, 1989.

81. Northern Virginia Planning District Commission (NVPDC), *BMP Handbook for the Occoquan Watershed*, 1987.

82. Peck, R.B., W.E. Hanson, and T.H. Thornburn, *Foundation Engineering,* John Wiley & Sons Publishing, Second Edition, 1974.

83. Randall, C.W., K. Ellis, T. Grizzard, and W. Knocke, *Urban Runoff Pollutant Removal by Sedimentation*, Proceedings of the Conference on Storm Water Detention Facilities, Henniker NH, ASCE, pages 205-219, August 2-6, 1982.

84. Rast, W., R.A. Jones, G.F. Lee, *Predictive Capability of U.S. OECD Phosphorus Loading — Eutrophication Response Models*, Journal of Water Pollution Control Federation, Volume 55, Number 7, pages 990-1003, July 1978.

85. Reddy, K., and W. Smith, *Aquatic Plants for Water Treatment and Resource Recovery*, Magnolia Press, 1987.

86. Rich, L., *A Critical Look at Rock Filters*, Journal of Environmental Engineering., ASCE, Volume 114, page 219, 1988.

87. Ritchie, S., *letter to R. B. James*, Chairman of the Management Committee of the Santa Clara Valley Nonpoint Source Pollution Control Program, 1992.

88. Roesner, L.A., J. Aldrich, J. Hartigan, et al., *Urban Runoff Quality Management — WEF Manual of Practice No. 23 / ASCE Manual and Report on Engineering Practice No. 87*, 1998.

89. Sacramento County, *Winterization Ordinance & Dust Control Ordinance*.

90. Sacramento County*, Tree Preservation Ordinance*, September 1981.

91. Sacramento County Cooperative Agricultural Extension*, Water Efficient Landscape Plants*, written by Pamela S. Bone, Environmental Horticultural Notes.

92. San Francisco Household Hazardous Waste Project, *Guide to Hazardous Products Around the Home* (booklet), 1989.

93. San Francisco Household Hazardous Waste Program, *Your Guide to Less Toxic Shopping: Safer Alternatives for Your Home and Life!* (booklet), 1992.

94. San Francisco Bay Regional Water Quality Control Board (SFBRWQCB), *General NPDES Permit for Discharges of Storm Water Associated with Industrial Activity in Santa Clara County to South San Francisco Bay or its Tributaries*, 1992.

95. San Francisco Bay Regional Water Quality Control Board (SFBRWQCB), *General NPDES Permit for Discharges of Storm Water from Boat Repair Facilities*, 1992.

96. Santa Clara County and City of Palo Alto, *Take Me Shopping: A Consumer Guide to Safe Alternatives for Household Hazardous Products* (booklet), 1992.

97. Santa Clara Valley Nonpoint Source Pollution Control Program, *The Bay Begins at Your Door* (brochure).

98. Santa Clara Valley Nonpoint Source Pollution Control Program, *Best Management Practices for Automotive-Related Industries*, 1992.

99. Santa Clara Valley Nonpoint Source Pollution Control Program, *Best Management Practices for Industrial Storm Water Pollution Control*, 1992

100. Santa Clara Valley Nonpoint Source Pollution Control Program, *Blueprint for a Clean Bay — Construction-Related Industries: Best Management Practices for Storm Water Pollution Prevention*, 1992.

101. Schueler, T.R., *Controlling Urban Runoff: A Practical Manual for Planning and Designing Urban BMPs*, Metropolitan Washington Council of Governments (MWCOG), Publication #87703, July 1987.

102. Seattle (municipality), *Pollutant Removal Effectiveness of a Designed Grassy Swale in Mountlake Terrace, Washington,* (draft) 1992.

103. Seattle (municipality), *Water Quality Best Management Practices Manual*, Washington State, 1989.

104. Shaver, Earl, *personal communication to Camp Dresser & McKee*, Delaware Department of Natural Resources.

105. Shaver, E., *Sand Filter Design for Water Quality Treatment*, Delaware Department of Natural Resources, 1991.

106. Shepp, D., D. Cole, and F. Galli, *A Field Survey of the Performance of Oil/Grit Separators*, Metropolitan Washington Council of Governments (MWCOG), 1992.

107. Silverman, G., *Wetlands for Oil and Grease Control*, Technical Memorandum 87, Association of Bay Area Governments (California), 1982.

108. Silverman, G., M. Stenstrom, and S. Fam, *Best Management Practices for Controlling Oil and Grease in Urban Storm Water Runoff*, Environmental Professional, Volume 8, pages 351-362, 1986.

109. Stahre, P., and B. Urbonas, *Swedish Approach to Infiltration and Percolation Design*, Design of Urban Runoff Quality Control, American Society of Civil Engineers, 1989.

110. Stewart, W., *Evaluation and Full-Scale Testing of a Compost Biofilter for Storm Water Runoff Treatment*, presented at the Annual Conference of the Pacific Northwest Pollution Control Association, 1989.

111. Strecker, E.W., J.M. Kersnar, and E.D. Driscoll, *The Use of Wetlands for Controlling Storm Water Pollution,* for USEPA Region V, 1992.

112. Suziki, T., W. Nissanka, and Y. Kurihara, "*Amplification of Total Dry Matter, Nitrogen and Phosphorus Removal from Stands of Phragmites australis by Harvesting"*, in Constructed Wetlands for Wastewater Treatment, ed. D. Hammer, Lewis Publishers, 1989.

113. Swisher, R.D., *Surfactant Biodegradation*, Marcel Decker Corporation, 1987.

114. Tahoe Regional Planning Agency, *Water Quality Management Plan for the Lake Tahoe Region, Volume II, Handbook of Management Practices*, November 1988.

115. Tennessee Department of Environment and Conservation (TDEC), *Tennessee Erosion and Sediment Control Handbook*, July 1992.

116. Tennessee Exotic Pest Plant Council, *Landscaping with Native Plants — Middle Tennessee Central Basin and Highland Rim*, May 1998.

117. Thut, R.N., "*Utilization of Artificial Marshes for Treatment of Pulp Mill Effluents",* in Constructed Wetlands for Wastewater Treatment, ed. D. Hammer, Lewis Publishers, 1989.

118. Tollner, E.W., B.J. Barfield, C.T. Hann, and T.Y. Kao, *Suspended Sediment Filtration Capacity of Simulated Vegetation*, Transactions of American Society of Agricultural Engineers, 19(4), pages 678-682, 1976.

119. Tomasak, M.D., G.E. Johnson, and P.J. Mulloy, *Operational Problems with a Soil Filtration System for Treating Storm Water*, Minnesota Pollution Control Agency, 1987.

120. Truong, H.V., *The Sand Filter Quality Structure*, District of Columbia Government, 1989.

121. Tulloch, Alice, *personal communication to Camp Dresser & McKee,* City of Modesto Public Works (California).

122. United States Army Corps of Engineers (USACE), *Hot-Mix Asphalt Paving Handbook,* AC 150/ 5370-14, Appendix I, July 1991.

123. United States Department of Agriculture (USDA) Soil Conservation Service (SCS), *Controlling Erosion of Construction Sites*, Agriculture Information Bulletin #347 (now called NRCS).

124. United States Department of Agriculture (USDA) Soil Conservation Service (SCS), *Engineering Field Handbook, Chapter 18, Soil Bioengineering for Upland Slope Protection and Erosion Reduction*, October 1992 (now called NRCS).

125. United States Department of Agriculture (USDA) Soils Conservation Service (SCS), *Guides for Erosion and Sediment Controls in California,* January 1991 (now called NRCS).

126. United States Department of Agriculture (USDA) Soil Conservation Service (SCS), *Soil Erosion by Water*, Agriculture Information Bulletin #513 (now called NRCS).

127. United States Environmental Protection Agency (USEPA), *Coastal Nonpoint Pollution Control Program: Program Development and Approval Guidance*, Working group working paper, April 1992.

128. United States Environmental Protection Agency (USEPA), *Constructed Wetlands and Aquatic Plant Systems for Municipal Wastewater Treatment*, EPA 625/1-88-022, 1988.

129. United States Environmental Protection Agency (USEPA), *Covers for Uncontrolled Hazardous Waste Sites,* EPA 540/2-85-002, 1985.

130. United States Environmental Protection Agency (USEPA), *Detention and Retention Effects on Groundwater*, Region V, 1991.

131. United States Environmental Protection Agency (USEPA), *Distribution List — Pollution Prevention Information Clearinghouse*, 1992.

132. United States Environmental Protection Agency (USEPA), *Dry Weather Deposition and Flushing for Combined Sewer Overflow Pollution Control*, U.S. EPA, EPA 600/2-79-133, August 1979.

133. United States Environmental Protection Agency (USEPA), *Methodology for Analysis of Detention Basins for Control of Urban Runoff Quality*, EPA 440/5-87-001, 1986.

134. United States Environmental Protection Agency (USEPA), *Processes, Procedures, and Methods to Control Pollution Resulting from All Construction Activity*, EPA 430/9-73-007, 1973.

135. United States Environmental Protection Agency (USEPA), *Proposed Guidance Specifying Management Measures for Sources of Nonpoint Pollution in Coastal Waters*, Working group working paper, April 1992.

136. United States Environmental Protection Agency (USEPA), *Sedimentation and Erosion Control: An Inventory of Current Practices* (Draft), April 1990.

137. United States Environmental Protection Agency (USEPA), *Storm Water Management for Construction Activities: Developing Pollution Prevention Plans and Best Management Practices*, EPA 832-R-92-005, April 1992.

138. United States Environmental Protection Agency (USEPA), *Storm Water Management for Industrial Activities: Developing Pollution Prevention Plans and Best Management Practices*, EPA 832-R-92-006, September 1992.

139. University of Tennessee Department of Civil and Environmental Engineering, *Soil Erosion Prevention and Sediment Control — Reducing Nonpoint Source Water Pollution on Construction Sites*, August 1998.

140. Urban Drainage & Flood Control District, Denver Colorado, *Urban Storm Drainage Criteria Manual: Volume 3 — Best Management Practices — Storm Water Quality*, September 1999.

141. Virginia Department of Conservation and Recreation, Division of Soil and Water Conservation, *Virginia Erosion and Sedimentation Control Handbook*, Third Edition, 1992.

142. Walker, W., *Phosphorus Removal by Urban Runoff Detention Basins*, Lake and Reservoir Management, North American Society for Lake Management, Volume III, pages 314-326, 1987.

143. Wanielista, M., *Final Report on Efficiency Optimization of Wet Detention Ponds for Urban Storm Water Management*, University of Central Florida, 1989.

144. Washington Department of Ecology, *Storm Water Management Manual for the Puget Sound Basin*, *Urban Land Use BMPs,* Technical Manual Volume IV, Publication #91-75, February 1992.

145. Whipple, W., and J. Hunter, *Settleability of Urban Runoff Pollution*, Journal of Water Pollution Control Federation, Volume 53, Number 12, pages 1726-1731, December 1981.

146. Youngner, V.B., J.H. Madison, M.H. Kimball, and W.B. Davis, *Climatic Zones for Turfgrass in California*, California Agriculture, Volume 16, Number 7, page 2, 1962.

147. Zirschky, J., and S. Reed, *The Use of Duckweed for Wastewater Treatment*, Journal of Water Pollution Control Federation, Volume 60, Number 7, pages 1253-1258, July 1988.

Added in January 2001:

148. American Excelsior Company, *Erosion Control and Revegetation*, 2000.

149. American Public Works Association, *Urban Storm Water Management*, Special Report 49, 1981.

150. Beaufort County (South Carolina), *Manual for Storm Water Best Management Practices*, prepared by Camp Dresser & McKee, March 1998.

151. Camp Dresser & McKee, *NPDES Storm Water Discharge Permit Application, Part I (April 1993) and Part II (May 1993)*, prepared for the City of Memphis and Shelby County.

152. Camp Dresser & McKee, *Recommended Criteria for Location and Design of Water Quality Detention Basins,* Technical Memorandum, July 1993.

153. Charlotte (city), Mecklenburg County, Debo and Associates, Ogden Environmental and Engineering Services, *Charlotte Mecklenburg Storm Water Design Manual,* July 1993.

154. Debo, Thomas, and Andrew Reese, *Municipal Storm Water Management,* Lewis Publishers, 1995.

155. Fairfax County, *Public Facilities Manual,* 1988.

156. Federal Highway Administration (FHWA), *Best Management Practices for Erosion and Sediment Control*, Report FHWA-FLP-94-005, June 1995.

157. Federal Highway Administration (FHWA), *Retention, Detention and Overland Flow for Pollutant Removal from Highway Storm Water Runoff*, *Design Guidelines*, Report FHWA-RD-89-203, August 1989.

158. Federal Highway Administration (FHWA), *Hydraulic Design of Highway Culverts,* Hydraulic Design Series No. 5, September 1985.

159. Federal Highway Administration (FHWA), *Use of Riprap for Bank Protection,* Hydraulic Engineering Circular No. 11 (HEC-11), June 1967.

160. Federal Highway Administration (FHWA), *Hydraulic Design of Energy Dissipators for Culverts and Channels,* Hydraulic Engineering Circular No. 14 (HEC-14), 1983.

161. Federal Highway Administration (FHWA), *Design of Stable Channels With Flexible Linings,* Hydraulic Engineering Circular No. 15 (HEC-15), October 1975.

162. Georgia State Soil and Water Conservation Commission (SSWCC), *Manual for Erosion and Sediment Control in Georgia*, Fifth Edition, 1999.

163. Kentucky Division of Conservation, *Best Management Practices for Construction Activities*, August 1994.

164. Kentucky Transportation Cabinet, *Drainage Guidance Manual,* January 1994.

165. Louisville and Jefferson County (Kentucky), Metropolitan Sewer District (MSD), *Erosion Prevention and Sediment Control, Interim Standards and Procedures*, September 1997.

166. Maine Department of Environmental Protection, *Storm Water Management for Maine: Best Management Practices*, November 1995.

167. North Carolina Sediment Control Commission, *Erosion and Sediment Control Planning and Design Manual*, September 1988.

168. St. Johns River Water Management District (SJRWMD), Florida, *Applicant's Handbook: Regulation of Storm Water Management Systems, Chapter 40C-42 F.A.C.*, October 1995.

169. Tennessee Department of Agriculture, Nonpoint Source Program, *Methods for Protecting and Restoring Urban Streams*, seminar workshop at Memphis, Tennessee on March 25 and 26, 1998.

170. Tennessee Department of Environment and Conservation (TDEC), *NPDES Permit No. TNS068055*, for the City of Memphis and Shelby County, Division of Water Pollution Control, issued on July 1, 1996.

171. Tennessee Department of Environment and Conservation (TDEC), *NPDES Permit No. TNR050000, Tennessee Storm Water Multi-Sector General Permit for Industrial Activities*, Division of Water Pollution Control, reissued February 2002.

172. Tennessee Department of Transportation (TDOT), *Standard Specifications for Road and Bridge Construction*, March 1995.

173. United States Bureau of Public Roads, *Design Charts for Open-Channel Flow,* Hydraulic Design Series No. 3, August 1961.

174. United States Bureau of Public Roads, *Design of Roadside Drainage Channels,* Hydraulic Design Series No. 4, May 1965.

175. United States Department of Agriculture (USDA), Soil Conservation Service (SCS), *Urban Hydrology for Small Watersheds,* Technical Release 55 (TR-55), June 1986 (now called NRCS).

176. United States Environmental Protection Agency (USEPA), *NPDES Best Management Practices Manual*, October 1993.

177. United States Environmental Protection Agency (USEPA), *Summary Guidance, Storm Water Management for Industrial Activities: Developing Pollution Prevention Plans and Best Management Practices*, EPA 833-R-92-002, October 1992.

178. United States Environmental Protection Agency (USEPA), *Urban Runoff Pollution Prevention and Control Planning*, EPA/625/R-93/004, September 1993.

179. University of Tennessee, Department of Civil & Environmental Engineering, *Soil Erosion Prevention & Sediment Control*, James Smoot and Russell Smith, December 1999.

180. Virginia Department of Conservation and Recreation, *Virginia Storm Water Management Handbook,* First Edition, 1999.

181. Wanielista, M., *Hydrology and Water Quantity Control,* John Wiley & Sons, 1990.

Added in March 2001:

182. Dewberry & Davis, *Land Development Handbook,* Editors S.O. Dewberry and J.S. Matusik, McGraw-Hill Inc., 1996.

183. Federal Highway Administration (FHWA), *Hydrology,* Hydraulic Engineering Circular No. 19 (HEC-19), October 1984.

184. Nashville & Davidson County Tennessee, Department of Public Works Engineering Division, *Storm Water Management Manual, Volume 2 — Procedures,* prepared by the EDGE Group and CH2M Hill companies, July 1988.

185. National Oceanic and Atmospheric Administration (NOAA), *Monthly Station Normals of Temperature, Precipitation, and Heating and Cooling Degree Days for Tennessee (1961 — 1990),* Climatography of the United States No. 81, J.R. Owenby and D.S. Ezell, January 1992.

186. U.S. Army Corps of Engineers, *HEC-1 Flood Hydrograph User's Manual,* September 1990, and HEC-1 computer program version 4.1, June 1998.

187. U.S. Army Corps of Engineers, *HEC-HMS Hydrologic Modeling System User's Manual*, March 2000, and HEC-HMS computer program version 2.0.3, August 2000.

188. Weather Bureau, *Rainfall Intensity-Duration-Frequency Curves,* Technical Paper No. 25, December 1955.

189. Weather Bureau, *Rainfall Frequency Atlas of the United States for Durations from 30 Minutes to 24 Hours & Return Periods from 1 to 100 Years,* Technical Paper No. 40, May 1961.

Added in May 2003 by City of Knoxville:

190. Center for Watershed Protection, *Pollution Prevention Fact Sheet: Animal Waste Collection*, http://www.storm watercenter.net, Ellicott City Maryland, 2002.

191. Lim, S., and V. Olivieri, *Sources of Microorganisms in Urban Runoff*, Johns Hopkins School of Public Health and Hygiene, Jones Falls Urban Runoff Project, Baltimore Maryland, 1982.

192. National Clean Boating Campaign (Marine Environmental Education Foundation), *A Guide For A Cleaner Boating Environment*, NCBC-290, October 2001.

193. National Fire Protection Association (NFPA) #96*: Standard for Ventilation Control and Fire Protection of Commercial Cooking Operation*, 2001.

194. Pagan, A., *Perspective: Struggling Through Hydrology Statistics,* Civil Engineering News, January 2001, page 24.

195. Tennessee Department of Environment and Conservation (TDEC), *NPDES Permit No. TNS068055*, for the City of Memphis and Shelby County, Division of Water Pollution Control, reissued 2003 (original reference 170).

196. Tennessee Department of Environment and Conservation (TDEC), *Erosion and Sediment Control Handbook*, Second Edition, March 2002.

197. Tennessee Department of Environment and Conservation (TDEC), *Oil and Grease Control Guidance Document,* June 2002.

198. Tennessee Valley Authority (TVA), *Tennessee Valley Clean Marina Guidebook*, Chattanooga Tennessee, 2001.

199. U.S. Army Corps of Engineers, HEC-HMS computer program version 2.2.1, October 2002.

200. Van der Wel, B., *Dog Pollution*, Magazine of the Hydrological Society of South Australia, Volume 2 (1), 1995.

Added in August 2006 by Memphis and Shelby County:

201. Center for Watershed Protection and University of Alabama, "Illicit Discharge Detection and Elimination, A Guidance Manual for Program Development and Technical Assessments", October 2004.

202. Natural Resources Conservation Service (NRCS), Shelby County Soil Survey, 1970.

203. California Storm Water BMP Handbook- Construction, California Storm Water Quality Association, January 2003.

Table of Contents for the BMP Appendices

ACTIVITIES AND METHODS

AM-01 Activity: Employee Training AM-01-1
AM-02 Activity: Construction Scheduling AM-02-1
AM-03 Activity: Preservation of Existing Vegetation AM-03-1
AM-04 Activity: Maintenance of Existing Drainage Systems AM-04-1
AM-05 Activity: Storm Drainage System Flushing AM-05-1
AM-06 Activity: Material Delivery and Storage AM-06-1
AM-07 Activity: Spill Prevention and Control AM-07-1
AM-08 Activity: Waste Management and Recycling AM-08-1
AM-09 Activity: Sanitary and Septic Waste Management AM-09-1
AM-10 Activity: Contaminated Soil Management AM-10-1
AM-11 Activity: Dust Control AM-11-1
AM-12 Activity: Dewatering Operations AM-12-1
AM-13 Activity: Pesticides, Herbicides, and Fertilizer Use AM-13-1
AM-14 Activity: Vehicle and Equipment Cleaning AM-14-1
AM-15 Activity: Vehicle and Equipment Fueling AM-15-1
AM-16 Activity: Vehicle and Equipment Maintenance and Repair AM-16-1
AM-17 Activity: Paving and Grinding Operations AM-17-1
AM-18 Activity: Concrete Waste Management AM-18-1
AM-19 Activity: Structure Construction and Painting AM-19-1

EROSION AND SEDIMENT

ES-01 Activity: Stabilized Construction Access ES-01-1
ES-02 Activity: Tire Washrack ES-02-1
ES-03 Activity: Construction Road Stabilization ES-03-1
ES-04 Activity: Gradient Terraces and Silt Trenches ES-04-1
ES-05 Activity: Surface Roughening ES-05-1
ES-06 Activity: Topsoil ES-06-1
ES-07 Activity: Mulch ES-07-1
ES-08 Activity: Seeding ES-08-1
ES-09 Activity: Sodding ES-09-1
ES-10 Activity: Trees, Shrubs, and Vines ES-10-1
ES-11 Activity: Erosion Control Blankets and Mats ES-11-1
ES-12 Activity: Geotextiles ES-12-1
ES-13 Activity: Check Dams ES-13-1
ES-14 Activity: Silt Fence ES-14-1
ES-15 Activity: Straw Bale Barrier ES-15-1
ES-16 Activity: Sandbag Barrier ES-16-1
ES-17 Activity: Brush or Rock Filter Berm ES-17-1
ES-18 Activity: Temporary Sediment Trap ES-18-1
ES-19 Activity: Sediment Basin ES-19-1
ES-20 Activity: Bank Stabilization and Soil Bioengineering ES-20-1
ES-21 Activity: Diversions and Downdrains ES-21-1
ES-22 Activity: Channel Linings ES-22-1
ES-23 Activity: Riprap ES-23-1
ES-24 Activity: Temporary Inlet Protection ES-24-1
ES-25 Activity: Outlet Protection ES-25-1
ES-26 Activity: Level Spreader ES-26-1

ES-27 Activity: Floating Sediment Curtain ES-27-1
ES-28 Activity: Gabions ES-28-1
ES-29 Activity: TDOT Standard Details for Erosion Control ES-29-1
ES-30 Activity: TDEC Erosion and Sediment Control BMPs ES-30-1

INDUSTRIAL AND COMMERCIAL

IC-01 Activity: Non-Storm-Water Discharges to Storm Drains IC-01-1
IC-02 Activity: Outdoor Loading and Unloading of Materials IC-02-1
IC-03 Activity: Outdoor Container Storage of Liquid Materials IC-03-1
IC-04 Activity: Outdoor Process Equipment Operations IC-04-1
IC-05 Activity: Grounds Construction and Maintenance IC-05-1
IC-06 Activity: Over-Water Operations IC-06-1
IC-07 Activity: Food Service and Handling IC-07-1
IC-08 Activity: Power or Pressure Washing IC-08-1
IC-09 Activity: Swimming Pools and Spas IC-09-1
IC-10 Activity: Dumpsters IC-10-1
IC-11 Activity: Kitchen Exhaust Cleaning IC-11-1
IC-12 Activity: Air Conditioners and Refrigerators IC-12-1
IC-13 Activity: Farms and Agricultural Land IC-13-1
IC-14 Activity: Response to Sanitary Sewer Overflows IC-14-1

RESIDENTIAL AND HOME OWNERS

RH-01 Activity: Non-Storm-Water Discharges to Storm Drains RH-01-1
RH-02 Activity: Vehicle Washing RH-02-1
RH-03 Activity: Vehicle Maintenance and Repairs RH-03-1
RH-04 Activity: Landscape Irrigation and Lawn Watering RH-04-1
RH-05 Activity: Pesticides and Fertilizers RH-05-1
RH-06 Activity: Household Solid and Hazardous Waste Management RH-06-1
RH-07 Activity: Sanitary Sewer Laterals and Septic Tanks RH-07-1
RH-08 Activity: Pet and Animal Wastes RH-08-1
RH-09 Activity: Slope and Stream Bank Stabilization RH-09-1
RH-10 Activity: Swimming Pools and Spas RH-10-1
RH-11 Activity: Boating and Marinas RH-11-1
RH-12 Activity: Tips for Wet Basements and Crawl Spaces RH-12-1

STORM WATER TREATMENT

ST-01 Activity: Dry Detention Basin ST-01-1
ST-02 Activity: Wet Detention Basin ST-02-1
ST-03 Activity: Infiltration Systems and Methods ST-03-1
ST-04 Activity: Constructed Wetlands ST-04-1
ST-05 Activity: Filter Strips and Swales ST-05-1
ST-06 Activity: Water Quality Inlets and Media Filtration Inlets ST-06-1
ST-07 Activity: Oil-Water Separator ST-07-1
ST-08 Activity: Underground Detention ST-08-1
ST-09 Activity: Multiple Systems ST-09-1

List of Figures

Figure AM-03-1 Typical Tree Well Section AM-03-9
Figure AM-03-2 Typical Drainage Pipe Layout AM-03-10
Figure AM-12-1 Typical Filter Box AM-12-6
Figure AM-12-2 Typical Portable Sediment Tank AM-12-7
Figure AM-14-1 Construction Vehicle and Equipment Cleaning Area AM-14-5
Figure AM-15-1 Typical Layout — Retail Gasoline Stations AM-15-5

Figure ES-01-1 Stabilized Construction Entrance ES-01-4
Figure ES-02-1 Typical Washrack for Construction Access Area ES-02-3
Figure ES-03-1 Temporary Stream Crossing — Bridge ES-03-4
Figure ES-03-2 Temporary Stream Crossing — Culverts ES-03-5
Figure ES-04-1 Furrow Layout ES-04-5
Figure ES-04-2 Serrated Slope Layout ES-04-6
Figure ES-04-3 Stepped Slopes and Terraced Slopes ES-04-7
Figure ES-05-1 Surface Roughening — Equipment Tracking ES-05-3
Figure ES-10-1 Typical Planting Detail — Shrub or Vine ES-10-6
Figure ES-10-2 Typical Planting Detail — Tree ES-10-7
Figure ES-11-1 Typical Anchoring Details for Erosion Control Matting ES-11-7
Figure ES-12-1 Anchoring Geotextiles in Channels ES-12-8
Figure ES-12-2 Anchoring Geotextiles on Embankments ES-12-9
Figure ES-12-3 Fiber Roll Installation ES-12-10
Figure ES-13-1 Rock Check Dams ES-13-4
Figure ES-14-1 Typical Silt Fence Installation ES-14-6
Figure ES-14-2 Triangular Silt Fence ES-14-7
Figure ES-14-3 Silt Fence (Below a Steep or Long Slope) ES-14-8
Figure ES 14-4 Silt Fence (Small Ditch or Swale Only) ES-14-8
Figure ES-15-1 Straw Bale Barrier ES-15-5
Figure ES-16-1 Sandbag Barrier ES-16-4
Figure ES-17-1 Rock Filter Berm ES-17-5
Figure ES-17-2 Brush Filter Berm ES-17-6
Figure ES-18-1 Temporary Sediment Trap — Overflow ES-18-7
Figure ES-18-2 Temporary Sediment Trap — Rock Outlet ES-18-8
Figure ES-18-3 Temporary Sediment Trap — Combination Outlet ES-18-9
Figure ES-19-1 Typical Sediment Basin ES-19-10
Figure ES-19-2 Temporary Sediment Basin — Riser and Pipe Outlet ES-19-11
Figure ES-19-3 Possible Alterations to Permanent Detention Basin Outlet Structures ES-19-12
Figure ES-20-1 Live Fascine Details ES-20-9
Figure ES-20-2 Branch Packing Details ES-20-10
Figure ES-20-3 Vegetated Cribwall ES-20-11
Figure ES-20-4 Vegetated Rock Gabion ES-20-12
Figure ES-20-5 Vegetated Rock Wall ES-20-13
Figure ES-21-1 Typical Diversions ES-21-5
Figure ES-21-2 Typical Downdrain Details ES-21-6
Figure ES-22-1 Basic Flow Computation — Manning's Equation ES-22-3
Figure ES-22-2 Manning's Roughness Coefficient — Grass Channels ES-22-9
Figure ES-23-1 Angle of Repose for Riprap Based on Average ES-23-6
Figure ES-23-2 Distribution of Boundary Shear for Trapezoidal ES-23-7

Figure ES-23-3 Base of Riprap Slope Protection ES-23-12
Figure ES-24-1 Inlet Protection — Block and Gravel ES-24-5
Figure ES-24-2 Inlet Protection — Sandbag Barrier ES-24-6
Figure ES-24-3 Inlet Protection — Wire Mesh and Gravel ES-24-7
Figure ES-24-4 Inlet Protection — Excavated Impoundment ES-24-7
Figure ES-24-5 Inlet Protection — Geotextile Filter Bag ES-24-8
Figure ES-25-1 Riprap Outlet Protection ES-25-5
Figure ES-25-2 Various Energy Dissipaters and Stilling Basins ES-25-7
Figure ES-26-1 Level Spreaders ES-26-3
Figure ES-27-1 Floating Sediment Curtain ES-27-4
Figure ES-28-1 Typical Gabion Wall Geometry ES-28-2

Figure IC-10-1 Hydraulically Activated Wash Water Diversion System IC-10-5
Figure IC-10-2 Automated Wash Water Diversion System IC-10-5

Figure RH-12-1 Typical Paths of Water and Moisture Entering Into a Crawl Space Area RH-12-4
Figure RH-12-2 Correct Installation of Downspout Shoe and Splash Block at Foundation Wall RH-12-5
Figure RH-12-3 Correction of Typical Slope Drainage Problem Using Swale or Ditch RH-12-6

Figure ST-01-1 Typical Dry Detention Basin Layout ST-01-9
Figure ST-01-2 Typical Outlet Structure ST-01-10
Figure ST-01-3 Outlet Structure — Alternative A ST-01-11
Figure ST-01-4 Outlet Structure — Alternative B ST-01-11
Figure ST-01-5 Typical Detail — Backslope Drain ST-01-12
Figure ST-02-1 Schematic of Wet Detention Basin ST-02-10
Figure ST-02-2 Typical Wet Detention Basin Layout ST-02-11
Figure ST-02-3 Typical Outlet Structure ST-02-12
Figure ST-02-4 Outlet Structure — Alternative A ST-02-13
Figure ST-02-5 Outlet Structure — Alternative B ST-02-13
Figure ST-03-1 Typical Infiltration Basin ST-03-10
Figure ST-03-2 Typical Infiltration Trench (with Surface Drainage) ST-03-11
Figure ST-03-3 Typical Infiltration Trench (with Rooftop Drainage) ST-03-11
Figure ST-03-4 Typical Drywell (with Rooftop Drainage) ST-03-12
Figure ST-03-5 Examples of Porous Pavement ST-03-12
Figure ST-04-1 Typical Wetlands Layout ST-04-9
Figure ST-04-2 Typical Flow Patterns ST-04-10
Figure ST-04-3 Typical Outlet Structure ST-04-10
Figure ST-05-1 TSS Removal Efficiency for Grass Swales and Filters ST-05-5
Figure ST-05-2 Examples of Filter Strips and Swales ST-05-7
Figure ST-05-3 Characteristics of Various Types of Grass ST-05-8
Figure ST-06-1 Typical Storm Water High-Flow Bypass Manhole ST-06-9
Figure ST-06-2 Modified Catch Basin ST-06-9
Figure ST-06-3 Surface Sand Filter ST-06-10
Figure ST-06-4 Storm Filer (Media Cartridge) ST-06-10
Figure ST-06-5 Delaware Sand Filter ST-06-11
Figure ST-06-6 Underground Sand Filter ST-06-11
Figure ST-06-7 Typical Grate Inlet Filter (With Filter Trays) ST-06-12
Figure ST-06-8 Typical Grate Inlet Filter (with Sorbent Material) ST-06-12

Figure ST-06-9 Clog-Resistant Media Filtration Inlets ST-06-13
Figure ST-07-1 Typical Oil-Water Separators ST-07-9
Figure ST-07-2 Typical Size and Volume Distribution of Oil Droplets ST-07-10
Figure ST-07-3 Typical Storm Water High-Flow Bypass Manhole ST-07-10
Figure ST-07-4 Conventional Oil-Water Separator ST-07-11
Figure ST-07-5 Typical Detail for Swirl Oil-Water Separators ST-07-12
Figure ST-07-6 Flow Schematic for Continuous Deflection Separators ST-07-12
Figure ST-07-7 Oil-Water Separator (Stormceptor) ST-07-13
Figure ST-07-8 Oil-Water Separator (Downstream Defender) ST-07-13
Figure ST-07-9 Flow Schematic for Dual Tank System ST-07-14
Figure ST-09-1 Multiple Systems for Storm Water Treatment BMPs ST-09-4

List of Tables

Table AM-01-1 Quick Reference for Disposal Alternatives AM-01-6
Table AM-03-1 Section 33 — [Tree Removal] (Joint Tree Ordinance No. 235, Sections 1 to 9, February 26, 2001) AM-03-11
Table AM-07-1 Immediate Response Procedures On-Scene Personnel AM-07-6
Emergency Telephone Numbers AM-07-7
Table AM-07-2 Notification Requirements AM-07-9
Table AM-11-1 BMPs for Dust Control AM-11-5
Table AM-11-2 Commonly Used Chemicals for Dust Control AM-11-6

Table ES-06-1 Typical Amount of Lime Required for Grass Seeding ES-06-3
Table ES-08-1 Temporary Seed Mixtures ES-08-6
Table ES-08-2 Permanent Seed Mixtures ES-08-6
Table ES-09-1 Comparison of Seeding and Sodding ES-09-4
Table ES-10-1 Approved Plant List ES-10-8
Tree A: Trees over 50' Tall ES-10-8
Tree B: Trees 30' to 50' Tall ES10-9
Tree C: Trees Less than 30' Tall ES-10-9
Tree D: Evergreen Trees over 30' Tall (Evergreen Trees for Screening) (Variety of Evergreen Trees is Encouraged) ES-10-10
Tree E: Evergreen Trees Less than 30' Tall ES-10-10
Table ES-22-1 Manning's Roughness Coefficient — Channels ES-22-5
Table ES-22-2 Manning's Roughness Coefficient — Natural Channels ES-22-6
Table ES-22-3 Retardance Classifications for Grass Channels ES-22-7
Table ES-22-4 Permissible Velocities ES-22-10
Table ES-23-1 Machined Riprap Specifications ES-23-3
Table ES-23-2 Hand-Placed Riprap Specifications ES-23-3
Table ES-23-3 Non-Machined Riprap Specifications ES-23-4
Table ES-23-4 Weight and Size Equivalents of Riprap ES-23-11
Table ES-25-1 Selecting Riprap Apron Length (L_A) and Riprap Median Size (D_{50}) ES-25-6

Table ST-03-1 Typical Infiltration Rates from USDA Soil Texture ST-03-4
Table ST-03-2 Comparative Evaluations of Potential Infiltration Sites ST-03-5
Table ST-04-1 Size Criteria for Storm Water Wetlands ST-04-3

ACTIVITY: Employee Training	AM – 01

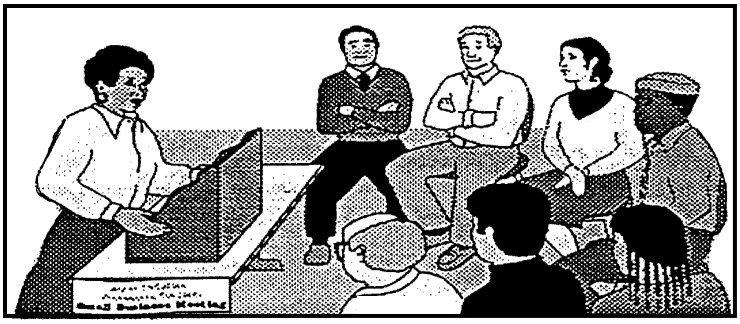

Targeted Constituents

● Significant Benefit ◗ Partial Benefit ○ Low or Unknown Benefit

● Sediment	● Heavy Metals	● Floatable Materials	● Oxygen Demanding Substances	
● Nutrients	● Toxic Materials	● Oil & Grease	● Bacteria & Viruses	● Construction Wastes

Description

Employee training and knowledge is the beginning point for solving storm water pollution problems. This fact sheet highlights the importance of employee training as integral to the performance of any job. An employee who is trained at the start of any job will perform the task correctly; an untrained employee may not perform the task correctly and may never learn to do it the right way after the initial opportunity is lost. Management should integrate key elements from individual BMP fact sheets into a comprehensive training program.

Specific training aspects for employees (including any subcontractors if present) are highlighted in the individual fact sheets. The focus of this fact sheet is more general, and includes the overall objectives and approach for assuring employee/subcontractor training in storm water pollution prevention. Employee training is generally the most important BMP in this manual.

Objective

Employee training should include subcontractors and other regular workers at the project site. Training should be based on four objectives:

- Promote a clear identification and understanding of the problem, including activities with the potential to pollute storm water.
- Identify solutions using BMPs and available technologies.
- Promote employee ownership of the problems and solutions.
- Integrate employee feedback into training and BMP implementation.

Approach

This BMP is very closely related to IC-01, Non-Storm-Water Discharges to Storm Drains, in that the principal goal is to eliminate all substances (liquid or solid) that do not belong in storm water. The current storm water ordinances (available under Web site resources links at www.stormwatermatters.com) specifically describe what is allowable to discharge into the storm water; all other discharges are prohibited. The following list of non-storm-water discharges are allowable:

(1) Potable water
(2) Potable water line flushing
(3) Air-conditioning condensate
(4) Discharges from emergency firefighting activities and exercises (a storm water pollution prevention plan should be prepared to address discharges or flows from firefighting only where such discharges are identified as significant sources of pollutants to waters of the United States)
(5) Uncontaminated water from crawl space, pumps, or footing drains
(6) Lawn watering
(7) Residential car and boat washing
(8) Dechlorinated swimming pool water
(9) Materials placed as part of an approved habitat restoration or bank stabilization project
(10) Rising groundwaters, uncontaminated groundwater infiltration, uncontaminated pumped ground water, uncontaminated springs, diverted stream flows
(11) Flows from riparian habitats and wetlands
(12) Common practices for water well disinfections
(13) Discharges within the constraints of a National Pollutant Discharge Elimination System (NPDES) permit from the Tennessee Department of Environment and Conservation (TDEC)
(14) Unless otherwise prohibited by this ordinance, any discharge that could be made directly to waters of the state without federal or state permits being required
(15) Dye testing in compliance with section 30-28(b)
(16) Other types of discharges as determined by the manager

(Order No. 292, § 30-109, 12-6-04)

<u>The following non-storm-water discharges are explicitly prohibited</u> by the City of Memphis, Shelby County Storm Water Ordinance. The list of prohibited discharges is not all-inclusive, since any type of discharge not specifically exempted (see list of 16 items above) is prohibited by law.

(1) Trash or debris
(2) Construction materials
(3) Petroleum products including but not limited to oil, gasoline, grease, fuel oil, or hydraulic fluids

(4) Antifreeze and other automotive products
(5) Metals in either particulate or dissolved form
(6) Flammable or explosive materials
(7) Radioactive material
(8) Batteries, including but not limited to, lead acid automobile batteries, alkaline batteries, lithium batteries, or mercury batteries
(9) Acids, alkalis, or bases
(10) Paints, stains, resins, lacquers, or varnishes
(11) Degreasers and/or solvents
(12) Drain cleaners
(13) Pesticides, herbicides, or fertilizers
(14) Steam cleaning wastes
(15) Soaps, detergents, or ammonia
(16) Swimming pool backwash including chlorinated swimming pool discharge
(17) Chlorine, bromine, and other disinfectants
(18) Heated water
(19) Animal waste from commercial animal or feeder lot operations
(20) Any industrial and sanitary wastewater, including leaking sewers or connections
(21) Recreational vehicle waste
(22) Animal carcasses
(23) Food wastes
(24) Medical wastes
(25) Collected lawn clippings, leaves, branches, bark, and other fibrous materials
(26) Collected silt, sediment, or gravel
(27) Dyes, except as stated in subsection (b)
(28) Chemicals not normally found in uncontaminated water
(29) Any hazardous material or waste, not listed above
(30) Washing of fresh concrete for cleaning and/or finishing purposes or to expose aggregates
(31) Junk motor vehicles, as defined in subsection (c)
(32) Liquid from solid waste disposal containers

Penalties for minor discharges that have no significant adverse impact on safety, health, the welfare of the environment, or the functionality of the county's storm water collection system may be waived at the discretion of the manager.

(a) Dye testing is allowed but requires verbal notification to the manager a minimum of 24 hours prior to the date of the test. The City of Memphis and Shelby County governmental agencies are exempt from this requirement.

(b) Junk motor vehicle means any vehicle that shall include by way of example but not be limited to the following vehicle types: automobiles,

construction equipment, motorcycles, and trucks and that meets all of the following requirements:

(1) Is three years old or older

(2) Is extensively damaged, such damage including, but not limited to any of the following: A broken window or windshield or missing wheels, engine, or transmission

(3) Is apparently inoperable

(4) Is without a valid current registration

(5) Has a fair market value equivalent only to the value of the scrap in it.

(Order No. 292, § 30-108, 12-6-04)

Requirements

- Scheduling to minimize site disturbance must be emphasized for construction projects.

- Integrate training regarding storm water quality management with existing training programs that may be required for your business by other regulations such as the 40-hour Hazardous Waste Operations and Emergency Response (HAZWOPER, Title 29 Code of Federal Regulations Part 1910.120 [29 CFR 1910.120]) and Spill Prevention Control and Countermeasure (SPCC) Plan (required by 40 CFR 112). Supervisors and inspectors should receive additional annual 8-hour Occupational Safety and Health Administration (OSHA) refresher courses.

- Businesses, particularly smaller ones that may not be regulated by federal, state, or local regulations, may use the information in this BMP Manual to develop a training program to reduce their potential to pollute storm water.

- Use the quick reference on disposal alternatives (Table AM-01-1) to train employees and subcontractors in proper methods for disposal. Post information on the employee bulletin board, around the job site, or in the office trailer to reinforce training.

- Train employee and subcontractors in standard operating procedures and spill cleanup techniques described in the fact sheets. Employee/ subcontractors who have been trained in spill containment and cleanup should be present during the loading, unloading, and handling of materials.

- Identify locations with higher potential for spills and leaks, such as indoor and outdoor loading platforms, material storage containers, plant and facility processing areas, and disposal areas for liquid and solid wastes. Discuss examples of leaks or spills at this project site or similar facilities to review actions taken by staff, controllable and uncontrollable processes, and ways to improve spill response. Incorporate various case studies into regular safety training.

- Personnel who use pesticides, herbicides or fertilizers must be trained to follow product instructions and suggested usage rates to avoid overapplication.

- Proper education of subcontractors or offsite personnel is often overlooked. The conscientious efforts of well-trained employees and subcontractors can be negated by careless or untrained subcontractors, so make sure they are well-informed about what they are expected to do onsite.

References

30, 31, 33, 34, 35, Memphis and Shelby County Storm Water Ordinances (see BMP Manual Chapter 10 for list)

TABLE AM-01-1
QUICK REFERENCE FOR DISPOSAL ALTERNATIVES

All of the waste products on this chart are prohibited from discharge to the storm drain system. Use this matrix to decide which alternative disposal strategies to use; alternatives are listed in order of priority.

Key:

City/Co SW	City of Memphis or Shelby County Storm Water Hotlines (City at 576-4349 or County at 545-3870)
HHW	Household Hazardous Waste Collection (Contact the Shelby County Environmental Programs Coordinator at 379-4410 for information)
SS	Public sanitary sewer system operated by City of Memphis at 529-4300 or Shelby County at 301-5801 (permits required)
LHW	Licensed hazardous waste contractor
SW Collector and Recycler	Solid Waste Collector and Recycler- City of Memphis Solid Waste at 576-6508/special pickup at 576-6730) or BFI in Shelby County at 794-3800

Notes:

"Dispose to sanitary sewer" means dispose into sink, toilet, or sanitary sewer cleanout connection.
"Dispose as trash" means dispose in Dumpsters or trash containers for pickup and eventual disposal in landfill.
"Dispose as hazardous waste" for business/commercial contract with a licensed hazardous waste hauler to remove and dispose.

DISCHARGE/ACTIVITY	BUSINESS / COMMERCIAL / INDUSTRIAL / CONSTRUCTION		RESIDENTIAL
	Disposal Priorities	Contact	Disposal Priorities
A. Painting and Paint Removal			
Excess paint (oil-based)	1. Recycle or reuse. 2. Dispose as hazardous waste.	— LHW	1. Recycle or reuse. 2. Contact HHW for info.
Excess paint (water-based)	1. Recycle or reuse. 2. Dry residue in cans, dispose as trash. 3. If volume is too much to dry, dispose as hazardous waste.	— — LHW	1. Recycle or reuse. 2. Dry residue in cans, dispose as trash. 3. If volume is too much to dry, contact HHW for info.
Paint cleanup (oil-based)	Wipe paint out of brushes, then: 1. Filter & reuse thinners and solvents. 2. Dispose as hazardous waste.	— LHW	Wipe paint out of brushes, then: 1. Filter & reuse thinners and solvents. 2. Contact HHW for info.
Paint cleanup (water-based)	Wipe paint out of brushes, then rinse to sanitary sewer.	—	Wipe paint out of brushes, then rinse to sanitary sewer.
Empty paint cans (dry)	Remove lids, dispose as trash.	—	Remove lids, dispose as trash.
Paint stripping (with solvent)	Dispose as hazardous waste.	LHW	Take to HHW drop-off.
Non-hazardous paint scraping / sand blasting	Dry sweep, dispose as trash.	—	Dry sweep, dispose as trash.
Hazardous paint scraping / sand blasting (such as marine paints or paints containing lead or tributyl tin)	Dry sweep, dispose as hazardous waste.	LHW	Dry sweep, take to HHW drop-off.
Cleaning of building exteriors that have hazardous materials, such as mercury or lead, in paint (generally older buildings)	1. Use dry cleaning methods and dispose as hazardous waste. 2. Contain and dispose wash water as hazardous waste (dry material first to reduce volume).	LHW LHW	Do not perform; contact a licensed contractor.
B. General Construction and Cleaning			
Cleaning of building exteriors that do not contain hazardous materials or paint (such as high-pressure water) — this activity requires a State Operating Permit from TDEC (see IC-08)	1. Prevent entry into storm drain and remove offsite for disposal. 2. Collect (usually mop up or vacuum) and discharge to sanitary sewer. 3. Wash onto dirt area, mix into soil.	LHW SS —	Do not perform; contact a licensed contractor.
Soil stockpiles and sediments	1. Cover disturbed soils, use erosion controls, block entry to storm drain. 2. Seed or plant immediately.	— —	1. Cover disturbed soils, use erosion controls, block entry to storm drain. 2. Seed or plant immediately.
Excess fresh cement, grout, mortar	1. Recycle or reuse. 2. Incorporate into fill areas or bury. 3. Dispose to trash.	— — —	1. Use or reuse. 2. Incorporate into fill areas or bury. 3. Dispose to trash.

DISCHARGE/ACTIVITY	BUSINESS / COMMERCIAL / INDUSTRIAL / CONSTRUCTION		RESIDENTIAL
	Disposal Priorities	Contact	Disposal Priorities
Wash water from concrete or mortar cleanup, or aggregate wash from driveways or patio construction	1. Wash onto dirt area, spade in, and mix. 2. Pump and remove to appropriate disposal facility. 3. Settle and pump water to sanitary sewer.	— — SS	1. Wash onto dirt area, spade in, and mix. 2. Pump and remove to appropriate disposal facility. 3. Settle and pump water to sanitary sewer.
Rinse water from concrete mixing trucks	1. Return truck to yard for rinsing into pond or dirt area. 2. Rinse truck into a prepared pond or dirt area at construction site. Clean area after drying.	— —	Do not perform; contact a licensed contractor.
Non-hazardous construction and demolition debris	1. Recycle or reuse (concrete, wood, etc.) 2. Dispose as trash.	— —	1. Recycle or reuse (concrete, wood, etc.). 2. Dispose as trash.
Hazardous demolition and construction debris (such as asbestos)	Dispose as hazardous waste. Contact an asbestos removal service for safe removal and disposal.	LHW	Contact an asbestos removal service for safe removal and disposal. Even small amounts of asbestos are an extreme health hazard.
Saw-cut slurry	1. Use dry-cut methods, sweep up residue. 2. Vacuum slurry and dispose offsite. 3. Block storm drain as necessary to allow most solids to settle. Shovel gutters and dispose residue to dirt area or landfill.	— — —	Do not perform; contact a licensed contractor.
Construction dewatering (Non-turbid, uncontaminated groundwater)	1. Recycle or reuse if not contaminated. 2. Discharge to storm drain.	City/County SW	1. Recycle or reuse if not contaminated. 2. Discharge to storm drain.
Construction dewatering (Turbid and uncontaminated groundwater)	1. Recycle or reuse if not contaminated. 2. Dewater through filters (see AM-12). 3. Treat and discharge to sanitary sewer.	— — SS	Do not perform; contact a licensed contractor.
Construction dewatering (Contaminated groundwater)	1. Treat and discharge to sanitary sewer. 2. Collect and handle as hazardous waste.	SS LHW	Do not perform; contact a licensed contractor.
Portable toilet waste	Leasing company shall dispose to sanitary sewer with permission from City of Memphis.	Toilet vendor	Do not perform; contact a licensed contractor.
Leaks from garbage Dumpsters	1. Collect and contain leaking material. Eliminate leak, keep covered, return to leasing company for immediate repair. 2. If Dumpster is used for liquid waste, use plastic liner.	Dumpster vendor —	Do not perform; contact a licensed contractor.

DISCHARGE/ACTIVITY	BUSINESS / COMMERCIAL / INDUSTRIAL / CONSTRUCTION		RESIDENTIAL
	Disposal Priorities	**Contact**	**Disposal Priorities**
Dumpster cleaning water	1. Clean at Dumpster owner's facility and discharge waste through grease interceptor to sanitary sewer. 2. Clean onsite and discharge through grease interceptor to sanitary sewer.	Dumpster vendor SS	Do not perform; contact a licensed contractor.
Leaks from construction debris bins	Verify that bins are used for dry non-hazardous materials only. Use fencing to help prevent misuse.	—	Do not perform; contact a licensed contractor.
Potable water line flushing or hydrant testing	Deactivate chlorine by maximizing time water will travel before reaching creeks. Impound as necessary.	—	Deactivate chlorine by maximizing time water will travel before reaching creeks. Impound as necessary.
Super-chlorinated (above 1 part per million) water from water line flushing or from swimming pools	1. Discharge to sanitary sewer. 2. Complete dechlorination required before discharge to storm drain.	SS —	1. Discharge to sanitary sewer. 2. Complete dechlorination required before discharge to storm drain.
Cleaning streets in construction areas	1. Dry sweep, minimize tracking of mud. 2. Use silt pond or sediment-trapping techniques when flushing pavement.	— —	Do not perform; contact a licensed contractor.
Cleaning driveways and paved areas • Small vehicle leaks • Food or food product wastes (Special focus is on restaurant alleys, grocery Dumpsters, food handling areas)	1. Dry sweep and dispose as trash. 2. Follow this three-step process: a) Clean up leaks with rags or absorbents. b) Using granular absorbent material (cat litter) and then sweep. c) Mop and dispose of mop water indoors to sanitary sewer.	— —	1. Dry sweep and dispose as trash. 2. Follow this three-step process: a) Clean up leaks with rags or absorbents. b) Using granular absorbent material (cat litter) and then sweep. c) Mop and dispose of mop water indoors to sanitary sewer.
Steam cleaning of driveways, sidewalks, plazas — discharges from this activity to the storm sewer system require a state operating Permit from TDEC (see IC-08)	1. Collect all wash water and pump to sanitary sewer. 2. Follow this three-step process: a) Clean up leaks with rags or absorbents. b) Sweep (use dry absorbent as needed). c) Using no soap, discharge to storm drain.	SS City/County SW	Do not perform; contact a licensed contractor.

DISCHARGE/ACTIVITY	BUSINESS / COMMERCIAL / INDUSTRIAL / CONSTRUCTION		RESIDENTIAL
	Disposal Priorities	Contact	Disposal Priorities
C. Landscape and Garden Maintenance			
Pesticides	1. Use completely. Rinse containers and use rinse water as product. Dispose rinsed container as trash. 2. Dispose unused pesticide as hazardous waste.	— LHW	1. Use completely. Rinse containers and use rinse water as pesticide. Dispose rinsed container as trash. 2. Take unused pesticide to HHW drop-off.
Garden clippings	1. Compost as mulch and use onsite. 2. Take to landfill.	— —	1. Compost as mulch and use onsite. 2. Take to city yard waste contractor.
Tree trimming	Chip as necessary before composting or recycling.	—	Chip as necessary before composting or recycling.
Emptying a swimming pool, spa, or fountain	Do not use metal-based algicides such as copper sulfate when using option 3. 1. Recycle or reuse (such as irrigation). 2. Determine when chlorine residual = 0 and then discharge to sanitary sewer. 3. Determine when chlorine residual = 0, wait 24 hours, and then discharge to storm drain.	SS City/County SW	Do not use metal-based algicides such as copper sulfate when using option 3. 1. Recycle or reuse (such as irrigation). 2. Determine when chlorine residual = 0 and then discharge to sanitary sewer. 3. Determine when chlorine residual = 0, wait 24 hours, and then discharge to storm drain.
Cleaning a swimming pool, spa, or fountain with acid or other types of cleaners	Neutralize and discharge to sanitary sewer.	SS	Do not perform; contact a licensed contractor.
Backwash for a swimming pool, spa, or fountain	1. Reuse for irrigation. 2. Dispose on grassy or dirt area. 3. Settle and dispose to sanitary sewer.	— — SS	1. Use for landscape irrigation. 2. Dispose on grassy or dirt area. 3. Settle and dispose to sanitary sewer.
D. Vehicle Wastes			
Used motor oil	Use secondary containment while storing and transporting, send to recycler.	Recycler	Take to auto service facility with recycling program.
Antifreeze	Use secondary containment while storing and transporting, send to recycler.	Recycler	Take to auto service facility with recycling program.
Other vehicle fluids and solvents	Dispose as hazardous waste.	LHW	Contact HHW for info.
Automobile batteries	1. Exchange / dispose at a retail outlet.	Recycler HHW	1. Exchange / dispose at a retail outlet. 2. Contact HHW for info.

DISCHARGE/ACTIVITY	BUSINESS / COMMERCIAL / INDUSTRIAL / CONSTRUCTION		RESIDENTIAL
	Disposal Priorities	Contact	Disposal Priorities
Used tires	1. Exchange / dispose at a retail outlet. 2. Take to Shelby County Tire Recycling Center at 511 Pear Avenue, Memphis, TN 38107 (contact by phone at 523-7269)/City solid waste pickup will collect up to 4 tires at special curbside pickup (contact by phone at 576-6730).	SW Collector and Recycler	1. Exchange / dispose at a retail outlet. 2. Contact HHW for info.
Vehicle or equipment washing	1. Recycle using enclosed system. 2. Discharge to sanitary sewer.	— SS	1. Take vehicle to commercial car wash. 2. Wash over lawn or dirt area. Use soap sparingly. Use a bucket for soapy water and discharge remaining soapy water to sanitary sewer.
Rinse water from car rental fleets or at car retail lots	1. Discharge to sanitary sewer. 2. If rinsing dust from exterior surfaces for appearance purposes, use no soap (water only) and discharge to storm drain.	SS —	Not applicable.
Vehicle repair or maintenance facilities (auto shops, gas stations, auto parts stores)	Follow this three-step process: a) Clean up leaks with rags or absorbents. b) Sweep, using granular absorbent material (cat litter). c) Mop and dispose of mop water to sanitary sewer. Contact the Water Quality Hotline if any liquids or materials are discharged to ditch, storm drainage system, or natural stream.	— City/County SW	Same procedure as commercial facilities. Generally do not perform automotive work at home.
E. Other Wastes			
Cleanup wastewater from sewer backup	Block storm drain, then collect and return spilled material to sanitary sewer. Rinse remaining material to a collection point and pump to sanitary sewer.	SS	Block storm drain, then collect and return spilled material to sanitary sewer. Rinse remaining material to a collection point and pump to sanitary sewer.

DISCHARGE/ACTIVITY	BUSINESS / COMMERCIAL / INDUSTRIAL / CONSTRUCTION		RESIDENTIAL
	Disposal Priorities	**Contact**	**Disposal Priorities**
Roof drains	1. Discharge to sanitary sewer if rainwater is contaminated from roofing materials or deposition of air-borne pollution. 2. If no contamination is present, discharge to open pervious fields leading to storm drain.	SS —	Dispose to open pervious lawns before roof drainage flows into storm drain.
Cooling water or air-conditioning condensate	1. Recycle or reuse. 2. If no contamination is present, discharge to open pervious fields leading to storm drain.	— —	Dispose to open pervious fields leading to storm drain.
Pumped groundwater or infiltration drainage which is contaminated	1. Treat and discharge to sanitary sewer. 2. Treat and discharge to storm drain. Possible reuse may be considered depending on extent of pollutants.	City/County SW	Do not perform; contact a licensed contractor to determine extent of pollution.
Carpet cleaning solutions, mobile washing services	Dispose to sanitary sewer.	SS	Dispose to sanitary sewer.
Kitchen grease	1. Collect and provide secondary containment. Send to recycler. 2. Collect and treat with grease trap or other BMPs, prior to discharging to sanitary sewer.	Recycler SS	1. Collect and solidify, then dispose as trash. 2. Dishwashing may generate small amounts of grease to be discharged to sanitary sewer.
Restaurant and grocery store cleaning of floor mats, exhaust filters, and other surfaces	1. Clean equipment inside building and discharge through grease trap to sanitary sewer. 2. Clean outside in container or bermed area with discharge to sanitary sewer.	SS SS	Not applicable. In general, clean surfaces and equipment so that wash water can be discharged to sanitary sewer.

ACTIVITY: Construction Scheduling	AM – 02

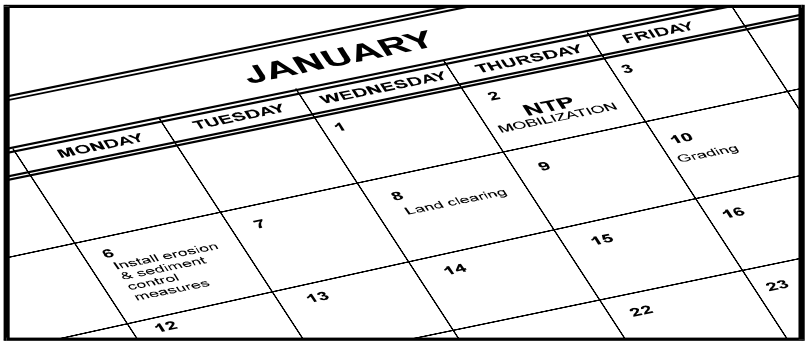

Targeted Constituents

● Significant Benefit ◗ Partial Benefit ○ Low or Unknown Benefit

● Sediment	○ Heavy Metals	○ Floatable Materials	○ Oxygen Demanding Substances	
◗ Nutrients	○ Toxic Materials	○ Oil & Grease	○ Bacteria & Viruses	◗ Construction Wastes

Description Reduce the discharge of pollutants to the storm drain system or to watercourses as a result of construction activities in a manner that minimizes the exposure of disturbed soils to wind, rain, and storm water runoff. If a construction contractor makes full use of the procedures outlined in this BMP, significant reductions can be made in sediment impact.

Approach It is a well-known fact that careful planning usually results in efficient work effort and a high quality of workmanship. The nature of construction work is such that many activities are subject to delays from weather, delivery of materials, project funding, equipment availability, work by subcontractors, remedial construction repairs, or simply that difficult tasks can be hard to estimate.

Obstacles to good planning should be met in two ways. First, provide a logical sequence of events that constitute the construction process. In this manner, there is at least a framework for scheduling and monitoring construction activities. Second, minimize the duration of events that have the potential to pollute storm water.

Schedules and Sequencing

- Plan construction project to incorporate a schedule and flow chart to layout the project. There are many types of scheduling software that are inexpensive and commonly available, or spreadsheets may be used to generate a time line.

- Work out the sequencing and timetable for the start and completion of each item such as site clearing, grading, excavation, trenching, pouring foundations, installing utilities, etc. This should be shown by specific construction areas.

- Schedule work to minimize the active construction area during predicted times of rainfall. Minimize land-disturbing activities during the rainy season. Schedule major grading operations for times other than winter or spring when practical.

- Incorporate placement and maintenance of erosion control items and soil stabilization items into the construction schedule, including seeding and planting. Stabilize nonactive areas as soon as practical within 14 days of grading activities. Sequence trenching so the length of open cuts is minimized.

Common Types of Schedules

- Planning Evaluation and Review Technique (PERT):

  1. List all individual tasks and events. Arrange and interconnect the tasks and events in order so that no task may be started until all of the preceding events have been completed. This is generally accomplished using arrows.

  2. Estimate the time required to complete each task. Compute the critical path by taking the longest possible time to go from start to finish, accomplishing all necessary tasks along the way.

  3. Analyze ways to improve the schedule or to troubleshoot possible delays. Slack time for any task is defined as the amount of time that the task can be delayed without becoming part of the critical path. Resource leveling is defined as shifting resources from a non-critical path into the critical path.

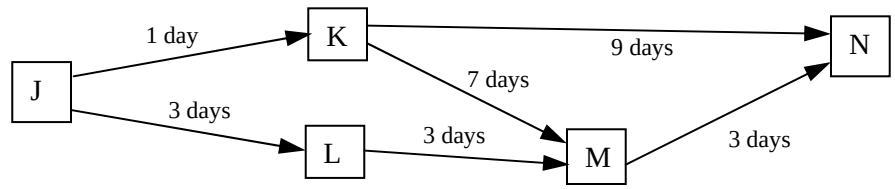

Example PERT Schedule

Critical path = J to K to M to N = 11 days
Slack time for path K to M to N = 1 day

- Milestone Chart:
  1. List all individual tasks and events in the order in which they occur. Identify which tasks cannot be started until a previous task or event has been finished.
  2. Estimate the time and manpower required to complete each task.
  3. Monitor time and manpower closely. Update chart regularly and report progress. If there are more appropriate units to measure work (such as miles of roadway or pallets of bricks), then these units may be used to measure the work accomplished.

Erosion Control Considerations

- Minimize or eliminate construction areas adjacent to streams, wetlands, and storm drainage features. This should be consistent with stream buffer requirements.

- Monitor weather forecast for rainfall. Inform field supervisors and inspectors to inspect site conditions. When rainfall is predicted, verify that erosion and sediment control devices are effective for disturbed areas prior to onset of rain.

- Erosion may be caused during dry periods by winds and vehicle tracking. Keep site stabilized year-round and maintain effective sediment-trapping devices.

Maintenance Routinely verify that work is progressing in accordance with the schedule. If construction progress deviates, take corrective actions. When changes are warranted, amend the sequence scheduling in advance to maintain control. Be sure all field supervisors and inspectors are aware of changes.

References **30, 31, 33** (see BMP Manual Chapter 10 for list)

ACTIVITY: Preservation of Existing Vegetation	AM – 03

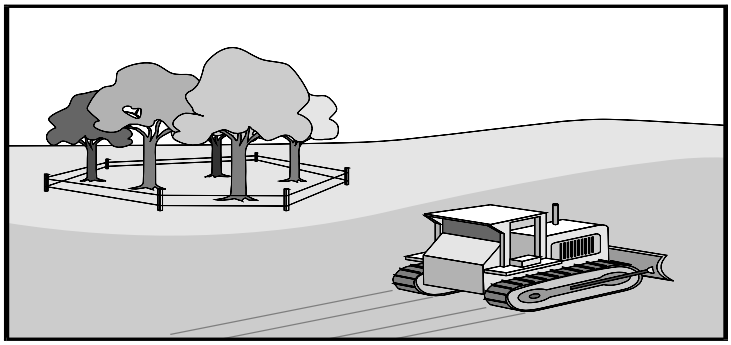

Targeted Constituents

● Significant Benefit ◗ Partial Benefit ○ Low or Unknown Benefit

● Sediment	○ Heavy Metals	● Floatable Materials	● Oxygen Demanding Substances	
● Nutrients	○ Toxic Materials	○ Oil & Grease	○ Bacteria & Viruses	○ Construction Wastes

Description

Carefully planned preservation of existing vegetation minimizes the potential of removing or injuring existing trees, vines, shrubs, and grasses that serve as erosion controls or otherwise stabilize soil or slopes. This practice will create a significant reduction in sediment, nutrients, floatable materials, and oxygen-demanding substances.

Suitable Applications

This technique is applicable to all types of construction sites. Areas where preserving vegetation can be particularly beneficial are floodplain, buffers, wetlands, stream banks, steep slopes, and other areas where erosion control would be difficult to establish and maintain, or areas where there are critical resources downstream.

Preservation of existing vegetation should be practiced in the following locations:

- Areas within site where construction activity is not permitted (such as buffers) or where construction activity occurs at a later date.
- Sensitive areas where natural vegetation exists and should be preserved, such as steep slopes, watercourses, and building sites in wooded areas.
- Areas where local, state, and federal government requires preservation, such as wet weather springs, wetlands, marshes, and protected habitats of endangered species.

Approach

Preservation of vegetation on a site must be planned before any site disturbance begins and must be done in accordance with the Shelby County Tree Ordinance (included in Table AM-03-1). Preservation requires good site management to minimize the impact of construction activities on existing vegetation, which may adversely affect tree

respiration, food processing, and growth. It is very inexpensive to preserve existing vegetation if properly planned during the project design, and it will yield aesthetic benefits that enhance property values.

The best way to prevent excessive erosion is to minimize disturbance of the land. On a construction site where extensive land disturbance is necessary, the engineer should design the site to protect sensitive areas such as streams and to incorporate particularly unique or desirable existing vegetation into the site landscaping plan. Clearly marked buffer zones are desirable to preserve these sensitive areas as well as take advantage of natural erosion prevention and sediment trapping in undisturbed areas.

The purpose of protecting existing vegetation is to ensure the survival of desirable vegetation for shade, beautification, and slope and erosion protection. Mature vegetation has extensive root systems that help to hold soil in place, thus reducing erosion and contributing to slope stabilization. Also, vegetation helps to keep soil from drying rapidly and becoming susceptible to erosion.

Saving existing vegetation and mature trees provides excellent aesthetics and will save money by reducing new landscaping requirements. Mature trees also increase property values, satisfy consumer aesthetic needs, reduce cooling costs in the proximity of homes, assist in the natural control of solar heat, soil conservation, flood control, air pollution and noise, and they provide citizens with psychological relief from the increasing complexities of the man-made urban environment.

Native vegetation typically requires much less maintenance than introduced vegetation. Consider mowing or trimming vegetation less frequently so that fewer clippings and cuttings are generated. If introduced vegetation is necessary, consider planting low-maintenance grasses and shrubs. An advantage of low-maintenance vegetation is that considerable water savings may be possible. Measures to improve disposition of grass clippings and cuttings are inexpensive and simple.

Application

Planning

- A complete plan for vegetation preservation should be prepared before clearing and construction begins. No vegetation should be destroyed or altered until the design of roads, buildings, and utility systems is finalized. Critical areas, such as floodplains, buffers, steep slopes, and wetlands, should be left in their natural condition unless disturbance is unavoidable and or if deemed necessary by floodplain/floodway requirements.

- Decisions on which vegetation to save should be based on the following considerations:

  - Life expectancy and present age
  - Health and disease susceptibility
  - Aesthetic values
  - Wildlife benefits
  - Adaptability to the proposed project
  - Survival needs of the vegetation
  - Relationship to other vegetation

- Evaluate existing vegetation for species type when preparing landscaping plans. The use of natural vegetation is preferred. Non-native species or invasive species may be removed when appropriate.

- Buffer areas should be delineated in the field with flags or colored temporary construction fencing. All protected vegetation should be delineated and identified (species and size) on the site plan and identified in field by a visible colored flag.

- Plans should include the maintenance of existing grade around vegetation to be preserved. Most vegetation damage due to construction activities is to the root zone, which can result in the vegetation dying within a few years. Raising the grade can suffocate roots, and lowering the grade may expose roots. Plans for tree preservation should avoid compaction of the soil within the drip line of a tree, which can block off air and water from the roots. Avoid changes in soil chemistry that can result from refuse of chemicals deposited on the soil surface.

- Temporary roadways should be located to minimize damage to shrub and tree stands. Temporary roadways should generally follow contours to reduce cutting and filling. Locate multiple utilities in the same trench to minimize trenching. Excavations should be outside the drip line of trees.

- Construction material storage areas, construction trailers, soil stockpiling, debris disposal, vehicle parking, and burning (by permit only) should be noted on the site plan, and located so that they do not cause root compaction or block water and air to the roots. For best efforts in retaining existing trees in areas to be paved, maintain 5 feet of ungraded ground beyond the drip line to help tree survival.

- Soil stabilization measures should be located at the limits of clearing to prevent sediment deposition within the area where vegetation is being preserved.

- Wind damage can result from exposure of vegetation to increased wind velocities; therefore this must be considered when removing adjacent vegetation.

- Equipment must be kept away from trees to be preserved to avoid trunk damage caused by equipment nicking or scarring the trunk.

Tree and Shrub Protection

Clearing limits should be outside of the drip line of any retained tree, and at a minimum of 5 feet from the trunk regardless of the size of the tree. A protective barrier, such as a colored temporary construction fence, should be placed at these limits. Individual trees, stands of trees, and areas of vegetation to be retained should be marked before construction at a height visible to equipment operation.

Employees and subcontractors shall be instructed to honor protective devices. No heavy equipment, vehicular traffic, or storage piles of any construction materials should be permitted within the drip line of any tree to be retained. Removed trees should not be felled, pushed, or pulled into areas with protected vegetation.

The following measures are alternatives for tree and vegetation protection:

- Board fencing on 4-inch-square posts set securely at a maximum distance of 6 feet apart, and protruding at least 4 feet above the ground, placed at the clearing limits.

- A cord fence with two rows of brightly colored cord running between posts. Each post should be at least 2 inches thick set securely at a distance 6 feet apart, and protruding at least 4 feet above the ground, placed at clearing limits. Strips of colored surveyor's flagging should be tied securely to cord at intervals of 3 feet.

- Plastic fencing of 40-inch-high orange polyethylene webbing, secured to metal "T" or "U" posts driven to a depth of at least 18 inches on 8 feet maximum centers, placed at the clearing limits.

Because vegetation may be destroyed by carelessness during final cleanup and landscaping, protective fences and barriers should be removed last after all other work is complete.

Fires and open burning are expressly prohibited by ordinance within Memphis and Shelby County. Toxic or construction materials such as paint, acid, gypsum board, chemicals, fuels, and lubricants may not be stored within 50 feet of the drip line of any retained trees, nor disposed of

in any way which would injure vegetation. Vehicle fueling or vehicle maintenance shall not occur within 50 feet of the drip line of any retained trees.

Grade Adjustment — Tree Wall

If the ground level is being lowered around an existing tree or tree group, construct a surrounding tree wall of large stones, brick, or block filled with topsoil. A professional arborist or landscape architect should be consulted before designing a tree wall. A tree wall must have good drainage in order to promote root growth and regeneration of tree roots. Some species will have little or no tolerance for root disturbance or certain construction methods. A tree presents additional considerations for a professional civil engineer to design a retaining wall. Such considerations include the effects of strong winds, ice accumulation on trees, and extent of maximum tree growth.

Grade Adjustment — Tree Well

If the ground level must be raised around an existing tree or tree group within the drip line, a tree well can be constructed. A professional arborist or landscape architect should be consulted, as some species will have little or no tolerance for root disturbance or certain construction methods. Construction of a tree well or a surrounding tree wall may affect the groundwater level. A tree well can be built halfway around a tree if the proposed grade change only occurs on one side.

The purpose of a tree well is to allow proper drainage, movement of air, and natural soils to remain in contact with the tree roots. Refer to Figures AM-03-1 and AM-03-2 (adapted from reference 155) and the following considerations for building a tree well:

- Remove vegetation and organic matter from beneath the retained tree to at least 3 feet beyond the drip line, loosening the soil to 3 inches deep without damaging roots. Apply fertilizer to the loosened soil at rates recommended by manufacturer.

- Construct a circular or square dry well at least 12 inches from the trunk of a mature tree or 24 inches from the trunk of a young tree. The well should be above the level of the proposed fill, sloping away from the trunk by 1 inch per foot of wall height. The dry well should be constructed of large stone, brick, building tile, concrete blocks, or cinder blocks, with openings left in the wall for the flow of air and water. Mortar should be used only near the top of the well and above the porous fill.

- Drain lines beginning at the lowest point inside the well should be built outward from the trunk in a radial pattern. Drain lines are typically 4-inch drain tiles, sloping away from the well at a rate of 1 percent. A circumferential line of tiles should be located beneath the drip line; vertical tiles should be placed over the intersections of the two horizontal tile systems for fills greater than 24 inches depth and held in place with stone fill. All tile joints should be tight. Drainage may be improved by extending radial tiles beyond each intersection and sloping sharply downward. Stones, crushed rock, and gravel may be used instead of vertical tiles.

- A layer of clean 2-inch diameter stone shall be placed over the entire area under the tree from the well outward at least to the drip line. For fills up to 24 inches deep, a layer 8 to 12 inches thick should be adequate. Deeper fills require thicker layers of stone to be built to a maximum of 30 inches.

- A 6-inch-thick layer of 0.75-inch to 1-inch diameter stone covered by straw, fiberglass mat, or filter fabric is used to prevent soil clogging. Complete filling with porous organic soil (to sustain vegetation) until the desired grade is reached.

- Crushed stone should be placed inside the dry well over the openings of the radial tiles to prevent clogging of the drain lines. Vertical tiles should also be filled with crushed rock and covered with a screen. The area between the trunk and the well wall should be covered by an iron grate or filled with a 1:1 mixture of crushed charcoal and sand to prevent people from falling into the well or to prevent leaves, debris, or dead animals from accumulating.

Trenching and Tunneling

- Trenching should be as far away from tree trunk as possible, usually outside of the tree crown. Curve trenches around trees to avoid large roots or root concentrations. If roots are encountered, consider tunneling at least 18 inches below ground surface and not below the tree center to minimize impact on roots.

- Tree roots should not be left exposed to air; they should be covered with soil as soon as possible, protected, and kept moistened with wet burlap or peat moss until the tunnel or trench can be completed. The ends of damaged or cut roots should be cut off smoothly and protected by painting them with a tree-wound dressing.

- Trenches and tunnels should be filled as soon as possible. Do not over compact soil as this can smother and kill the tree by eliminating air spaces in the soil. To induce new root growth, peat moss should

be added to fill material. Tree should be mulched to conserve moisture and fertilized to stimulate new root growth.

- Remove trees that are damaged seriously enough to affect their survival. If replacement is required, the new tree should be of similar species, at least 2 inches in caliper, and from balled and burlapped nursery stock.

Maintenance ***Grass***

Mechanical control of grass vegetation includes mowing, bush-hogging, and hand cutting. Bush-hogging refers to tractor-mounted equipment with hydraulically-mounted cutting machinery. On smaller areas, lawn tractors or push mowers are used. In areas that are inaccessible by machinery, such as steep grades and rocky terrain, hand cutting using gas-powered weed trimmers and scythes may be used. Maintenance of grass vegetation shall not be performed in the rain or before predicted rainfall.

Clippings and cuttings are the primary waste produced by mowing and trimming. Minimize transportation of clippings and cuttings into the storm water conveyance system. Compost piles are encouraged to create mulch and topsoil for landscaping. Mulching mowers may be recommended for certain areas. Mulching mowers should be encouraged for homeowners in flat areas. Mulching mowers have the added benefit of reducing the fertilizer demand through reuse of organic material.

Clippings and cuttings that are carried into the storm water system and receiving streams can degrade water quality in several ways. The amount of suspended solids will increase, causing turbidity problems. Since most of the constituents are organic, the biological oxygen demand will increase, lowering the amount of available oxygen to animal life. Nutrients are carried downstream to receiving waters.

When clippings and cuttings are generated, the main concern is to avoid transport of this material to the storm drainage system and to natural streams. In particular, it is necessary to pick up and properly dispose of clippings and cuttings on slopes and within storm water detention facilities. Clippings and cuttings near catch basins should be avoided by either using bagging equipment or manually picking the material up. Clippings and cuttings on flat surfaces are generally not transported by storm water runoff unless the event is particularly intense. Therefore, it may not be necessary to pick up or bag clippings and cuttings on flat or nearly flat surfaces. Operators should be trained to use good judgment in determining whether clippings and cuttings should be left in place or collected for disposal or composting.

Trees, Shrubs, and Vines

Irrigation or maintenance of existing vegetation should conform to the requirements in the landscaping plan. Any damage to the crown, trunk, or root system of a retained tree should be repaired immediately using the following guidelines:

- If a tree's root zone has been compacted, the soil should be aerated by punching holes 12 inches deep with an iron bar, and moving the bar back and forth until the soil is loosened. Holes should be placed 18 inches apart throughout the area of compacted soil under the tree drip line.

- Damaged roots should be immediately cut cleanly inside the exposed area and surfaces painted with approved tree paint, and moist soil or soil amendments should be spread over this area.

- If bark damage occurs, all loosened bark should be cut back into the undamaged area, with the cut tapered at the top and bottom, and drainage provided at the base of the wound. Cutting of the undamaged area should be as limited as is possible.

- Serious tree injuries should be attended to by an arborist, forester, or tree specialist. Stressed or damaged broadleaf trees should be fertilized to aid recovery.

- Trees should be fertilized in the late fall or early spring. Fertilizer should be applied to the soil over the roots and in accordance with label instructions, but never closer than 3 feet to the trunk. The fertilized area should be increased by one-fourth of the crown area for conifers that have extended root systems.

References **30, 33, 34, 35, 43, 90, 114, 144, 155** (see BMP Manual Chapter 10 for list)

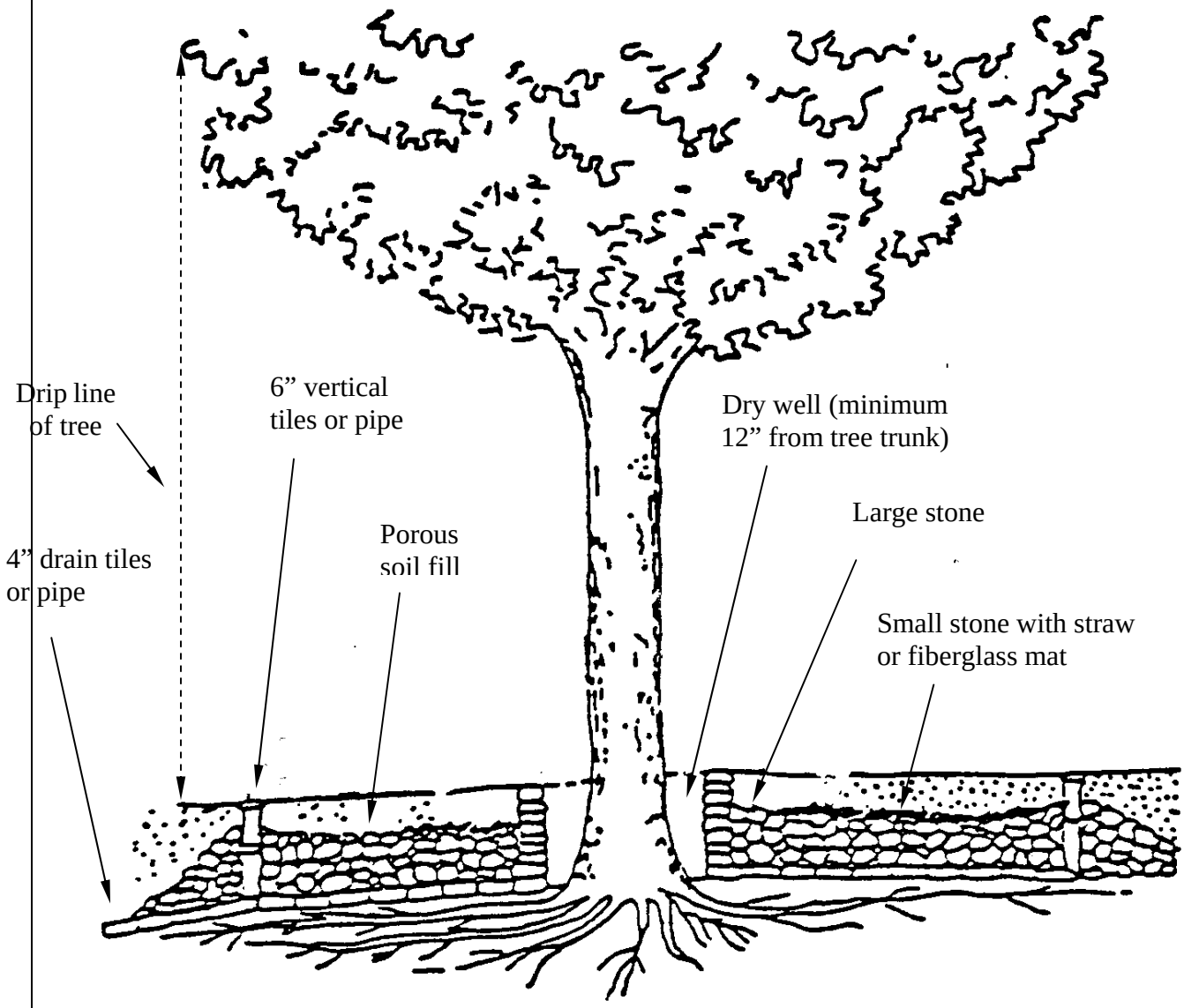

CROSS SECTION DETAIL

NOT TO SCALE

Figure AM-03-1
Typical Tree Well Section

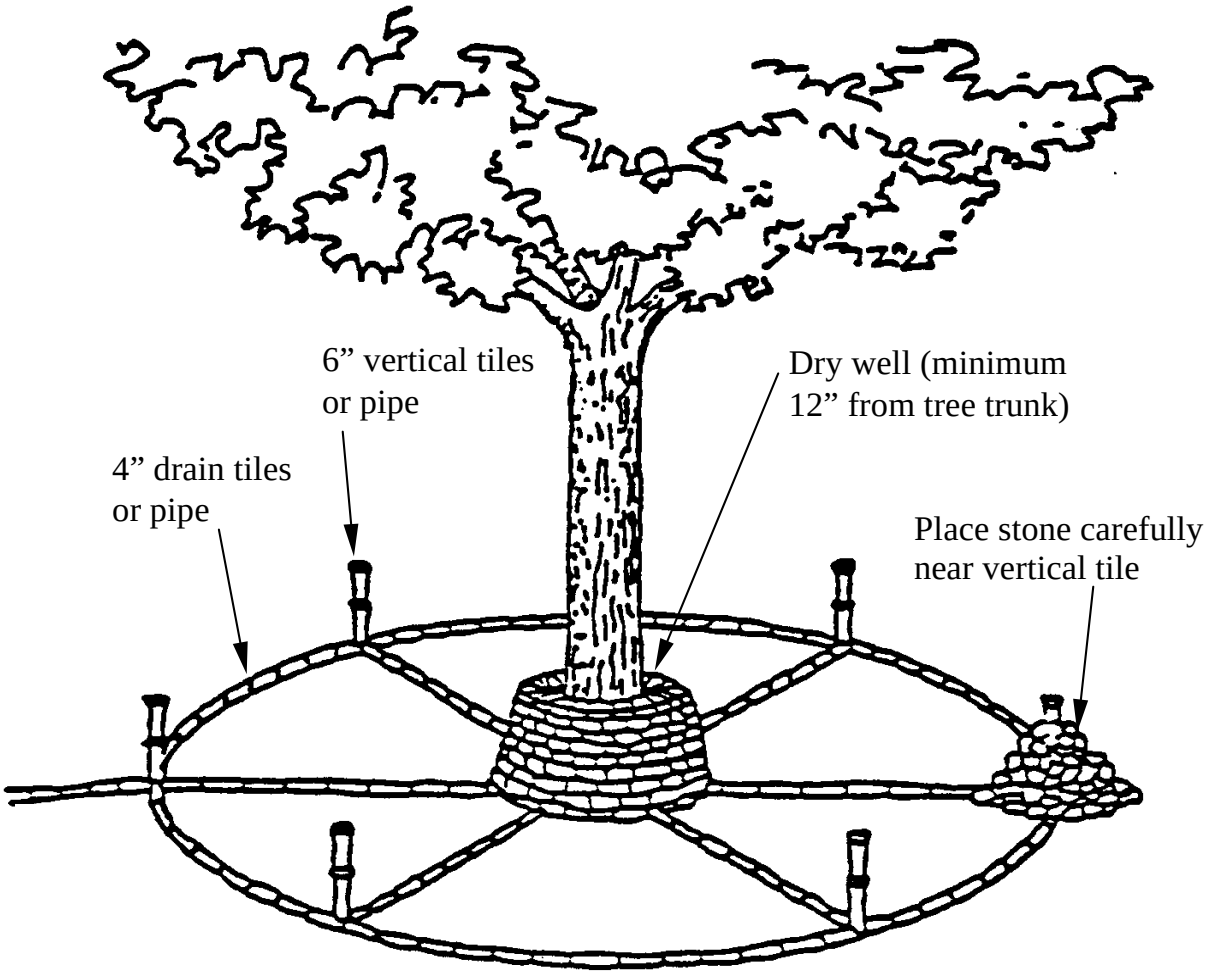

Figure AM-03-2
Typical Drainage Pipe Layout

TABLE AM-03-1
Section 33 — [Tree Removal]
(Joint Tree Ordinance No. 235, Sections 1 to 9, February 26, 2001)

1. ***Short Title.*** This ordinance [section] shall be known as the "Tree Ordinance."

2. ***Purpose.*** The purpose of this ordinance [section] is to reasonably regulate and control the clearing of tree and wood vegetation in the City of Memphis and unincorporated Shelby County, to encourage the protection and preservation of existing trees and root systems, especially on the front, side and rear of parcels subject to development, to encourage the planting of new trees, and to establish procedures and minimum standards for fulfilling these purposes in appropriate areas. This ordinance [section] is not intended to apply to any existing and approved subdivisions and/or outline plans which have been approved by the division of planning and development and land use control board (unless under appeal from that body), or property that is zoned IL or IH, or under an approved C-P plan, SC-1 plan, general plan or ML plan.

3. ***Definitions.*** For purposes of this ordinance [section], the following terms shall have the special meanings respectively ascribed to them below. Any term not defined herein shall be the one contained in the Memphis and Shelby County Zoning Ordinance Resolution, adopted October 6, 1980, as amended, codified as Appendix A to the Shelby County Code.

A. ***Development Plan.*** A plan that identifies the proposed work to be accomplished on any parcel of land, including a site plan identifying trees to be removed and trees to be preserved, protected or planted in accordance with the standards of this ordinance [section].

B. ***Director.*** The director of the division of planning and development responsible for the unincorporated area of Shelby County, or his or her designee within the division.

C. ***Diameter Breast Height (DBH).*** Trunk diameter measured at five feet from ground level. If a tree splits into multiple trunks below five feet, the trunk is measured at its most narrow point beneath the split.

D. ***Environmental Planner.*** An employee of the division of planning and development responsible for administering the provisions of this ordinance [section] and who may be responsible for additional aspects of environmental planning and may serve as the designee of the director.

E. ***Equivalent Alternative/Equivalent Landscaping Plate.*** Specific tree replacement planting actions in accordance with the landscape enhancement plates as defined and illustrated in the tree ordinance application procedures administered by the division of planning and development, and for which neither a tree survey or tree removal permit is required.

F. ***Notice of Intent.*** Written notice received by the director at least ten working days before any existing tree removal as defined by this ordinance [section].

G. ***Perimeter of Site.*** The outside boundary of the total site as defined by the proposed (for a zoning change application) or existing (for a proposed planned development) zoning classifications for front, rear, and side yards, except that in no case shall any applicable yard be less than 15 feet in width. The front yard shall not include required reservation of right-of-way for major roads or collector streets.

H. ***Remainder.*** That portion of the total site not classified as "perimeter" under subsection 3.G. of this ordinance [section].

I. ***Site.*** Any tract of land or group of connected tracts owned or functionally controlled by the same person or entity, including connected tracts owned or functionally controlled by different persons or entities assembled into one site for the purpose of development.

J. ***Timber Harvesting.*** Removal of some or all trees on a parcel of land, not incidental to development of the land for nonagricultural purposes, for the purpose of obtaining income, developing the environment necessary to regenerate the forest, or to achieve some special objective such as the development of special wildlife habitat needs.

K. ***Tree.*** Any self-supporting woody perennial plant, usually with one main stem or trunk.

L. ***Tree Bank.*** A fund set up to receive monies from owners or developers who, for reasons determined by the director or by the owner or developer, are unable to successfully plant and maintain trees on the site under development, with such monies to be used for planting and maintaining public trees under a planning process administered by the director.

M. ***Tree, Existing.*** For the purpose of this ordinance [section], a tree having a ten-inch DBH which is not located in the existing or proposed public right-of-way, does not interfere with required Shelby County slope stabilization treatments or Shelby County required right-of-way sight distance, and is not in a public utility easement. The following trees are not considered as "existing" for purposes of this ordinance [section]:

1. A tree demonstrated to be dead or dying

2. A tree that is diseased and likely to die if defined as such by the division of planning and development

3. A tree that is damaged or injured to the extent that it is likely to die or become diseased as defined by the division of planning and development

4. A tree that is an immediate threat or danger to the health and safety of the general public as determined by the director of the division of planning and development

5. A tree that is listed on the "undesirable" tree list as defined by the division of planning and development

N. ***Tree Removal.*** Removal of any existing tree that is not exempted by the application of this ordinance [section] as defined under subsection 4.

O. ***Tree Survey.*** A graphic illustration of existing trees upon a site which includes reasonably detailed location, diameter and species types.

1. The survey (if one is required) shall show the location, size and type of trees upon the site, including common or scientific names. The survey shall also indicate which trees are intended for removal and which will be left undisturbed and shall include all trees, including those defined in subsection 3.M.1.--5.

2. The survey shall show locations of existing and proposed buildings, layouts of roads, utilities, parking areas for vehicles, storage areas for construction materials, "cut and fill" areas, and other items that disturb or compact the soil in tree root zones.

3. The survey shall show existing and proposed grades and subsequent erosion control measures to prevent excessive siltation over the roots of protected trees and appropriate tree protection fencing for protected trees.

4. ***Tree survey;*** *permit requirements; alternative procedures.*

P. ***Undesirable Tree List.*** The division of planning and development will compile and maintain a list of trees that are deemed undesirable for purposes of this ordinance [section]. The list may be modified from time to time.

Q. ***Zoning Ordinance.*** The Memphis and Shelby County Zoning Ordinance Resolution, adopted October 6, 1980, as amended, codified as Appendix A in the Shelby County Code.

A. ***Applicability/Exemptions.*** The provisions of this ordinance [section] shall apply to all tree removal (as defined in subsection 3.N.) in the unincorporated areas of Shelby County and the City of Memphis, except in the following cases, which do not require a notice of intent, a tree survey, or a tree permit:

1. Where the tree removal is on a residential lot or parcel containing an existing dwelling, used for that purpose, and which is ten acres or less in size.

2. Where the tree removal is incidental to development on a parcel of land two acres or less in size.

3. Where no more than five trees per acre on any residential lot or parcel containing an existing dwelling used for that purpose are removed at any one time

4. Where the tree removal is incidental to development on a subdivided lot.

5. Where any existing and approved subdivision and/or outline plan has been approved by the director and the land use control board, unless under appeal.

6. Where the property is zoned I-L or I-H or is subject to an existing SC-1 plan, C-P plan, ML plan, or general plan.

7. Where conditions of a future outline plan, final plan, CP plan, ML plan, and/or subdivision plan approved by the appropriate legislative body waive or modify the requirements of this ordinance [section].

B. ***Tree Removal.***

1. ***General Requirements.*** Except as provided in subsections 4.A.1. through 4.A.7., it shall be unlawful for any person or entity to commence or cause to be commenced, the removal of any existing tree, without first:

(a) Having filed with the director a notice of intent no more than 45 and no less than ten working days before any activity

(b) Having filed a tree survey with the director, in cases where one is required

(c) Having applied for, paid the appropriate fee, and received a permit, in cases where one is required under this ordinance [section].

2. ***Notice Of Intent Required/Survey Required/Permit Required.***

(a) No more than 45 and no less than ten working days before the removal of any existing tree a notice of intent, as defined in subsection 3.I., must be filed with the director.

(b) Before the removal of any existing tree, a tree survey, as defined in subsection 3.O., shall be submitted to the director for review, except as provided under subsection 4.A.1. through 4.A.7.

(c) A permit shall be required if the removal of existing trees exceeds the matrix limits established under subsection 4.C. of this ordinance [section], an equivalent alternative method as described under subsection 4.B.4. of this ordinance [section] is not selected, and no waiver of such requirement is provided by the director.

3. ***Notice of Intent Required/Survey Required/Permit Not Required.***

(a) After the notice of intent has been filed with the director, and assuming that a tree survey is necessary, if the tree survey shows to the satisfaction of the director that the removal of existing trees will not exceed the matrix limits in subsection 4.C., a permit shall not be required.

4. ***Notice of Intent Required/Survey Not Required.***

(a) Should the person or entity responsible for tree removal under this ordinance [section] choose an equivalent alternative method consisting of specific tree

replacement planting actions in accordance with the tree ordinance landscape enhancement plates attached as exhibit A and incorporated herein by reference, a tree survey shall be waived and a permit shall not be required. Requests to utilize the equivalent alternative method shall be made by written application to the director, who shall review the request for conformance to the provisions of this ordinance [section] and either approve, return for revisions, or deny the request within ten working days of receipt. If denied or returned for revisions, the reasons for the denial or revision shall be stated in writing and forwarded to the applicant. When the director approves such equivalent landscaping plate, the director shall file a notice with the county register of deeds affirmatively representing the equivalent landscaping plate selected and approved for the parcel in question. The register of deeds shall record a notice that the property in question requires such landscaping plate, and this requirement shall run with the land.

(b) Parcels placed in the USDA Conservation Reserve Program shall not require a tree survey or a permit. A notice of intent shall be required, but no fee shall be charged for such properties.

(c) Where tree removal is incidental to a timber harvesting operation as defined by this ordinance [section], no application fee shall be charged.

(d) When the person or entity responsible for tree removal under this ordinance [section] has filed a notice of intent, accompanied by a petition for waiver of the tree survey and/or tree permit, setting forth specific reasons related to the nature of the property and/or the location of the trees on it that make it impractical or otherwise unnecessary to conduct a tree survey or obtain a permit, the director may waive the survey and permit requirements under this ordinance [section], but only upon a physical review of the site and/or a finding that such conditions warranting a waiver exist, when considering the purposes of this ordinance [section]. The waiver must be given in writing in order to be effective. Grounds for such a waiver include, but are not limited to, cases where there are an unusually small number of trees on the parcel (e.g., ten trees on a 15-acre lot) or where the applicant seeks to alter the parcel pursuant to any local, state, or federal regulatory requirements. Additionally, the director may waive the tree survey requirement when the person or entity responsible for tree removal under this ordinance [section] has received certification from a licensed engineer, licensed landscape architect or certified arborist (or other professional acceptable to the director) that the proposed tree removal will not exceed the applicable percentages outlined in the matrix. In cases where the equivalent alternative is used pursuant to subsection 4.B.4. of this ordinance [section], the Director may also waive the side and rear yard screening requirements set forth in the landscape enhancement plates upon a finding that the implementation of such plates is impractical or unnecessary, based on the existing use of the adjacent property.

5. ***Matrix.*** Removal of existing trees exceeding any of the percentages below, where an equivalent alternative or waiver is not used or given, shall require a permit:

Land Use Categories

TABLE INSET:

Areas Controlled	Perimeter of Site	Remainder of Site
Single-family (10,000 sq. ft. or less)	18%	100%
Single-family (over 10,000 sq. ft.)	18	80
Multiple-family	18	80
Office/institutional	18	90
Retail	23	90
Industrial	30	100
Agricultural	18	100

6. ***Permit procedure.***

A. ***Development Plan Requirements.*** Before the issuance of a permit for tree removal outlined herein, an applicant must submit a development plan or plans to the director, drawn to an appropriate scale, incorporating the tree survey, and outlining the proposed work to be accomplished and showing the following:

1. Species, size (DBH), and location of existing trees with a DBH of ten inches or greater proposed to be removed and those proposed to be preserved on the site.

2. The nature and extent of the proposed grading, earth-moving or change in elevation. The grading plan shall include existing and proposed contours at two-foot intervals.

3. The location of existing trees or groups of existing trees located on land with elevations ranging between plus two feet or minus two feet of the curb elevation of any existing roadway abutting the site.

4. Tree protection measures consistent with the requirements of this ordinance [section].

5. The number, species, size (DBH) and location of additional trees that will be planted on the site.

6. The nature and location of planned measures for controlling on-site generated erosion, sediment transport and surface water runoff.

7. The development plan shall provide for retention of trees on the site in a reasonably distributed manner after development. Trees thus retained will count toward landscaping requirements contained in the zoning ordinance.

8. The location of existing overhead or underground utilities, and any existing or proposed easements.

9. The location of existing or proposed public rights-of-way including any reservations for major roads in accordance with the major road plan.

B. ***Replacement Requirements/Tree Bank.*** Any existing tree removed from a parcel of land which exceeds the matrix under the terms of an approved development plan shall be replaced with four live trees having no less than a 2 1/2-inch caliper each.

In the event that the director determines that the proposed site is located in any district that may not adequately provide the required space to accommodate the provisions of this ordinance [section], or the soil types, topography and/or unusual nature of the site would not assure the growth of trees, or in the event the applicant prefers to contribute to the tree bank instead of on-site replacement, the applicant may contribute to the tree bank, as defined in subsection 3.L. an amount of money equal to the cost of providing the required replacement on the site up to a maximum contribution of $1,000.00 per acre of the area of the site for which a permit is required. The schedule of reasonable costs will be determined by the director and may be updated from time to time.

C. ***Tree Bank Administration.*** Funds which are contributed to the tree bank will be distributed by the office of planning and development (OPD) with approval by the director. The director of OPD shall consult with the Shelby County Environmental Improvement Committee and/or the Memphis City Beautiful Commission whichever is appropriate prior to approval of any distribution of tree bank funds. Expenditure of the funds shall be for planting public trees and may be used for recognition and preservation of trees designated as public trees through a heritage tree program. A heritage tree program may be developed by one or more of the following agencies: (1) the Memphis Parks Department, (2) the Shelby County Conservation Board, (3) the Memphis City Beautiful Commission, or (4) the Shelby County Environmental Improvement Committee.

D. ***Protection Measures.*** All trees on public or private property that are designated for preservation shall be "guarded" during the development of the site by a barrier or temporary fencing at least three feet high that designates the enclosed area as a tree protection zone. This enclosure shall extend equal to a distance from the trunk(s) to a point ten feet beyond. No construction materials, waste materials, excess dirt, or construction debris shall be deposited, nor shall any equipment or vehicles be allowed within this protection zone.

E. ***Application Review Procedure.*** All development plans shall be reviewed by the director for conformance to the provisions of this ordinance [section] and either approved, returned for revisions, or denied within ten working days of receipt. If denied or returned for

revisions, the reasons for denial or revision shall be stated in writing and forwarded to the applicant. Amendments to development plans shall be reviewed in the same manner.

The development requirements contained in an approved development plan, including established drainage design, tree planting and preservation requirements and all other landscaping requirements, shall continue to follow equitable ownership for one year after certificate of occupancy or until an amendment to the plan is duly authorized. Amendments to the plan shall not be required in cases where the director has determined that the plan is out of compliance due to an Act of God.

F. ***Appeals.*** Any dissatisfied applicant may appeal denial or partial approval of an application for a development plan to the board of county commissioners if the site is located within unincorporated Shelby County or the Memphis City Council if the site is located within the City of Memphis within ten days after the date of the notice of denial and shall make a written appeal to the board of county commissioners or Memphis City Council to consider the application as originally submitted, or with such revisions as maybe approved by the council or commission.

F.[G.] ***Time Limit.*** Unless otherwise specified, a tree permit shall automatically expire and become void if the work authorized by such permit is not commenced within 24 months after the date of the permit.

7. ***Fees.*** Upon application for any required notice of intent or tree removal permit, the applicant shall pay to the director a fee based upon the size of the development to cover the cost of reviewing and inspecting the work performed under the terms of the permit. The fees shall be determined as follows:

A. ***Notice of Intent.*** A flat fee of $50.00 for each filing.

B. ***Equivalent Alternative Review.*** Two hundred dollars plus $10.00 for each acre of land area within the project or fraction thereof not to exceed $1,000.00.

C. ***Tree Survey/No Further Action Required.*** A flat fee of $150.00 for each filing.

D. ***Tree Permit.*** One hundred dollars plus $10.00 per acre not to exceed $500.00.

8. ***Inspection and Enforcement.*** The requirements of this ordinance [section] shall be enforced by the director. If the director finds any person, firm or entity engaged in tree removal activity who fails to obtain a required permit or otherwise act in accordance with this ordinance [section] or any permit issued pursuant thereto, the director may issue a city and/or county ordinance citation charging the person, firm, or entity with violating one or more provisions of this ordinance [section].

The division of planning and development shall have the power to conduct such investigations as it may reasonably deem necessary to carry out its duties as prescribed in this ordinance [section], including but not limited to the power to enter at reasonable times

upon any property, public or private, for the purpose of investigating and inspecting the sites of any land disturbing or tree removal activities.

9. ***Violations and Penalties.*** The director is authorized to issue a stop work order to any person who violates any provision of this ordinance [section], or rule or order adopted or issued pursuant to the ordinance. Violation of this ordinance [section] shall be the basis of withholding a final inspection permit and certificate of occupancy until such violation is corrected to the satisfaction of the director. Violation of this ordinance [section] may also be the basis for injunctive relief, with such actions being brought and enforced through the Shelby County General Sessions Environmental Court. Applicants who have pursued the administrative remedies set forth in this ordinance [section] and who seek injunctive relief or mandamus may pursue such remedies in any court of competent jurisdiction. In addition, where trees have been removed in violation of this ordinance [section], the person or entity responsible for tree removal under this ordinance [section] may be required to replace the trees removed with a size and species recommended by the director or otherwise approved by the court and in accordance with subsection 5.B. before a final inspection permit and certificate of occupancy is issued.

10. ***Severance Provisions.*** All parts of this ordinance [section] shall be deemed severable. Should any section, paragraph, or provision be declared invalid or unconstitutional by the valid judgment or decree of any court of competent jurisdiction, such holdings shall not affect the validity of the ordinance [section] as a whole or any part thereof, other than the part so declared. The Board of Commissioners of Shelby County and the Memphis City Council hereby declares that it would have enacted this ordinance [section] and each part thereof irrespective of the fact that any one or more parts, sections, subsections, phrases, sentences or clauses be declared invalid.

(Joint Order No. 235, §§ 1--9, 2-26-01)

ACTIVITY: Maintenance of Existing Drainage Systems	AM – 04

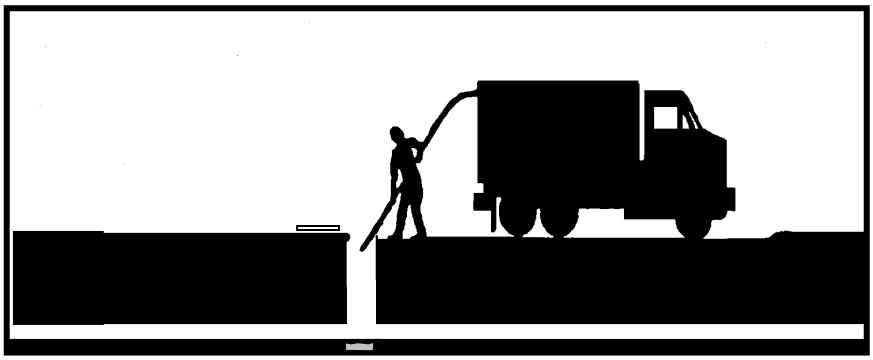

Targeted Constituents

● Significant Benefit ◗ Partial Benefit ○ Low or Unknown Benefit

● Sediment	◗ Heavy Metals	● Floatable Materials	● Oxygen Demanding Substances	
○ Nutrients	○ Toxic Materials	◗ Oil & Grease	◗ Bacteria & Viruses	○ Construction Wastes

Description

Proper maintenance and repair of existing drainage systems will greatly improve water quality and allows the storm drainage system to function at peak levels and reduce flooding. Properly designed catch basins and detention basins allow for easy removal of accumulated sediments at relatively minor cost.

Approach

Prior to starting construction activities, the contractor should clean and repair the existing storm water drainage system at the project site. This will reduce flooding, wet soils, and groundwater levels so that proper compaction and foundations can be constructed. A baseline of proper storm water drainage can be established so that the contractor and construction inspector have a common point of reference. Contractor should document maintenance and repairs to the existing storm water drainage system.

Property owners (residential, commercial, industrial, and institutional) should perform regular maintenance and repair on storm water drainage systems on the property, unless such maintenance has been specifically assigned to another party such as Memphis and Shelby County. The property owner should maintain a complete log of inspections and maintenance for storm water drainage systems.

Storm Drains

Maintain catch basins and storm water inlets on regular basis to remove sediments and pollutants, prevent clogging of downstream conveyances, and to restore sediment-trapping capacity. A catch basin differs from a storm water inlet by having a sediment sump, typically 4 to 6 inches deep, in bottom to catch and retain sediments.

Maintenance of catch basins and inlets is needed to ensure proper functioning; clogged catch basins are not only useless but may act as a source of sediments and pollutants. Any sediment and pollutants should be removed from the storm drainage system and disposed of properly. Do not flush the pipe system without having means to remove any sediment or pollutants that are deposited into the storm drainage system.

- Catch basins should be inspected weekly and cleaned if necessary to reduce the possibility of sediment and other pollutants from leaving the construction site. Remove accumulated paper, trash, debris, and sediment; dispose properly. Clean accumulated sediment and silt from catch basins and other inlets when they have reached 1/3 of the capture volume.

- To prevent sediment from entering catch basins, be sure to follow the guidelines set out in ES-24, Temporary Inlet Protection. Maintain a clean work site free of trash and litter. Do not allow dumping into catch basins and storm water inlets.

Detention Basins

Dry detention and wet detention basins shall be routinely cleaned and dredged in order to remove sediments and restore capacity. Proper maintenance of detention basins and infiltration device systems is a source control procedure necessary to ensure effective storm water pollutant removal efficiency. Provide for periodic trash debris removal. Clean sediment whenever it reaches approximately 1/3 of sediment storage capacity.

More frequent sediment removal is recommended in areas where roadway drainage provides a significant runoff component. High accumulation rates of heavy metal contaminants (lead, zinc, and copper) have been identified in BMP structures adjacent to high-traffic areas. Sediments with high rates of heavy metals can potentially be considered as hazardous waste, particularly in higher quantities.

- Clean detention basin control structures to remove accumulated sediments and debris on a weekly basis or as needed to prevent clogging of control structures throughout the construction project to reduce the possibility of sediment and other pollutants from leaving the construction site.

- Do not allow dumping into the storm drainage system or detention basins. Do not perform activities with potential for spills or leaks adjacent to detention basins.

- Vegetation growth in detention basins should not be allowed to exceed 12 inches in height. Mow the slopes periodically and check for clogging, erosion, and tree growth on the embankment.

Requirements

- Vacuum trucks and dredging operations can produce slurried waste that exceeds landfill acceptance criteria. Guidance may be obtained from AM-12, Dewatering Operations.
- Maintenance crews may require access vehicles, vacuum trucks, dump trucks, bulldozers, and dredging/excavation equipment. Manual-use equipment (such as rakes, shovels, sickles, and machetes) may suffice for maintenance of dry detention basins.
- Employee training and education should include these elements:
  - Proper disposal methods of sediments and other pollution
  - Record keeping
  - Channel maintenance and use of heavy equipment
  - Identification and handling of hazardous materials or wastes
- Grading, construction, major repairs, or vegetation clearing within streams or channels may require a permit. Contact Tennessee Department of Environment and Conservation (TDEC) for further information or to schedule a site visit. If storm channels or detention basins are recognized as wetlands, then it will be subject to further regulation by TDEC. Wetlands are defined by soil types, moisture conditions, or aquatic plants and wildlife.

References

4, 7, 9, 32, 33, 34, 35, 41, 45, 80, 144 (see BMP Manual Chapter 10 for list)

ACTIVITY: Storm Drainage System Flushing	AM – 05

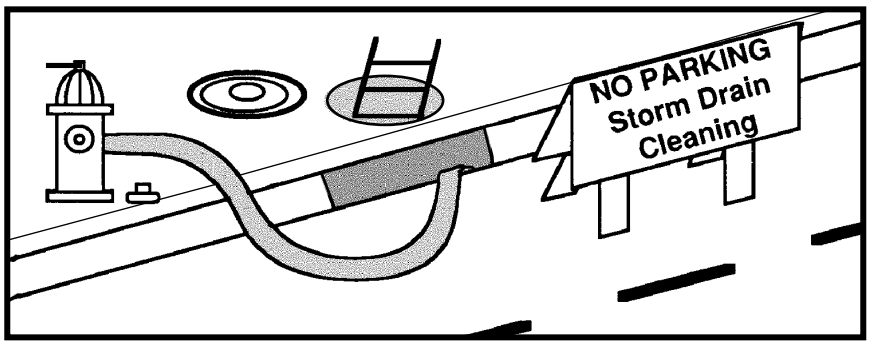

Targeted Constituents				
● Significant Benefit		◗ Partial Benefit	○ Low or Unknown Benefit	
● Sediment	◗ Heavy Metals	◗ Floatable Materials	○ Oxygen Demanding Substances	
○ Nutrients	○ Toxic Materials	◗ Oil & Grease	○ Bacteria & Viruses	○ Construction Wastes

Description

A storm drain is flushed with water to suspend and remove deposited materials. Flushing is particularly beneficial for storm drain pipes with grades too flat to be self-cleansing. Flushing helps ensure that pipes convey design flow and also removes pollutants from the storm drain system. This management practice is likely to create a significant reduction in sediment if flushed effluent is properly collected or treated.

Approach

- Locate reaches of storm drain with deposition problems and develop a flushing schedule to clear storm drain of excessive deposits.

- Flushed effluent should be collected and pumped to a sediment trap, sediment basin, or a detention basin.

- Storm drain flushing usually takes place along segments of pipe with grades that are too flat to maintain adequate velocity to keep particles in suspension. An upstream manhole is selected to place an inflatable device that temporarily plugs the pipe. Farther upstream, water is pumped into the line to create a flushing wave. When the upstream reach of pipe is sufficiently full to cause a flushing wave, the inflated device is rapidly deflated with the assistance of a vacuum pump. The backed-up water is quickly released, resulting in the cleaning of the storm drain segment.

- If the flushed water does not drain to a storm water treatment device (e.g., detention basin or swale), then a second inflatable device, placed well downstream, may be used to collect the flushed water after the force of the flushing wave has dissipated. A pump may then be used to transfer the water and accumulated material to a storm water treatment practice. In some cases, an interceptor structure may be more practical to collect the flushed waters.

Requirements

- Tennessee Department of Environment and Conservation (TDEC) regulations prohibit the discharge of soil, debris, refuse, hazardous waste, and other pollutants that may hinder the designed conveyance capacity or damage storm water quality or habitat in the storm drain system. This includes flushing any system connected to "Waters of the State" (any blue-line stream on the U.S. Geological Survey quadrangle, sinkhole, or other waterway so determined by TDEC personnel in the field). TDEC must be consulted if this practice is planned.

- Equipment

  - Water source (water tank truck or fire hydrant)
  - Sediment collector (eductor/vacuum truck or dredge)
  - Inflatable devices to block flow
  - Containment/treatment equipment for sediment and turbidity if flushing to an open channel

Limitations

- Most effective in smaller pipes (36-inch-diameter pipe or less), depending on water supply and sediment collection capacity.

- May have difficulty in finding available upstream water source.

- May have difficulty finding downstream area to collect sediments. Requires liquid and sediment collection and disposal.

Additional Information

It has been found that cleansing efficiency of periodic flush waves is dependent upon flush volume, flush discharge rate, drainage slope, pipe length, flow rate, pipe diameter, and population density. As a rule of thumb, the length of line to be flushed should not exceed 700 feet. At this maximum recommended length, the percent removal efficiency from the pipe at the time of flushing ranges between 65-75 percent for organics and 55-65 percent for dry weather grit/inorganic material. The percent removal efficiency drops rapidly beyond that. Water is commonly supplied by a water truck, but fire hydrants can also supply water. To make the best use of water, it is recommended that reclaimed water be used or that fire hydrant line flushing coincide with storm drainage system flushing.

References

30, 31, 32, 33, 34, 35, 132 (see BMP Manual Chapter 10 for list)

ACTIVITY: Material Delivery and Storage	AM – 06

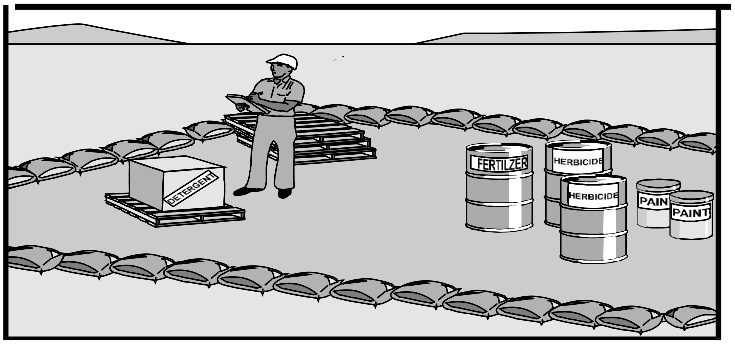

Targeted Constituents				
● Significant Benefit		◗ Partial Benefit	○ Low or Unknown Benefit	
◗ Sediment	◗ Heavy Metals	◗ Floatable Materials	◗ Oxygen Demanding Substances	
◗ Nutrients	◗ Toxic Materials	◗ Oil & Grease	◗ Bacteria & Viruses	◗ Construction Wastes

Description

Prevent or reduce the discharge of pollutants to storm water systems or natural channels from material delivery and storage by minimizing the onsite storage of hazardous materials, storing materials in a designated area, installing secondary containment, conducting regular inspections, and training employees and subcontractors.

This best management practice covers only material delivery and storage. Procedures for material delivery and storage must include the requirements in AM-07, Spill Prevention and Control. Additional discussion of material delivery and storage for bulk materials, and the very important activity of spill prevention, is included in the following BMPs:

IC-02 Outdoor Loading and Unloading of Materials
IC-03 Outdoor Container Storage of Liquid Materials

Approach

The following materials are commonly stored on large and small construction sites; this list also applies to residential and commercial properties.

- Soil
- Concrete compounds
- Pesticides and herbicides
- Fertilizers
- Detergents
- Plaster or other products
- Petroleum products (fuel, oil, grease)
- Chemicals (acids, lime, glues, paints, solvents, curing compounds)

Storage of these materials can pose various degrees of the following risks:

- Injury to workers or visitors
- Storm water pollution
- Groundwater pollution
- Soil contamination

Training

- Train employees and subcontractors on material delivery and storage. Employees trained in emergency spill cleanup procedures should be present when dangerous materials or liquid chemicals are unloaded. Personnel who use pesticides should be trained in their use.

- Have proper storage instructions posted at all times in an open and conspicuous location. Periodically review this with field supervisors and inspectors.

- For quick reference on disposal alternatives for many types of waste materials, see Table AM-01-1, which is part of the Employee Training BMP fact sheet.

- Contain and clean all spills immediately. Report actions to supervisor and to emergency response personnel as necessary.

Site Layout and Procedures

- Designate areas of the site for material delivery and storage. Place areas near the entrances and away from drainage paths and waterways. Surround with earth berms, dikes, swales, or other containment practices. Ideally, storage areas will be located in paved areas, or in areas to be paved if at a construction site.

- Storage of reactive, ignitable, or flammable liquids must comply with the fire codes such as NFPA 30, Flammable and Combustible Liquids Code. Contact the City of Memphis and Shelby County Fire Inspections Division to review site materials, quantities, and proposed storage area to determine specific requirements.

- Follow manufacturer's instructions regarding uses, protective equipment, ventilation, flammability, and mixing of chemicals.

- Keep accurate, up-to-date inventory of materials delivered and stored on the site. Maintain current material safety data sheets (MSDS) in a central location.

- Minimize hazardous materials stored on the site and handle hazardous materials as infrequently as possible.

- There are several commercially available products that can temporarily seal storm drains or sewer drains. These products can be activated in a variety of ways, including magnetically. Place emergency sealing devices in conspicuous locations proximate to the point of use and train personnel appropriately.

- Consider storing materials in a covered area. Store materials in secondary containment structures such as an earthen dike, horse trough, or even a children's wading pool for non-reactive materials such as detergents, oil, grease, and paints. Small amounts of material may be secondarily contained in buckets or concrete mixing trays.

- Do not store chemicals, drums, or bagged materials directly on the ground. Place these items on a pallet.

- Try to keep chemicals in the original containers, and make sure that all chemicals are adequately labeled. Use other containers only if made of material compatible with the stored chemical. All containers must be adequately sealed to protect against spilling, and then stored in an appropriate place.

- Do not overapply fertilizers, herbicides, and pesticides. Prepare only the amount needed. Follow the recommended usage instructions. Overapplication is expensive and environmentally harmful. Till fertilizers into the soil. Apply surface dressings in several smaller applications, as opposed to one large application, to allow time for infiltration and to avoid excess material being carried away by runoff. Do not apply these chemicals just before it rains.

- Stockpile soil in a central location and protect the stockpile from storm water. Apply suitable controls to prevent sediment from stockpile by measures such as silt fences, straw bale barriers, sand bag barriers, sediment traps, or basins. If the stockpile will be inactive for an extended period, plant temporary vegetation or install long-term perimeter controls. Small stockpiles may be protected with tarps.

Maintenance

- Keep the designated storage area clean and well-organized.

- Conduct routine weekly inspections and check for external corrosion of material containers.

- Keep an ample supply of spill cleanup materials near the storage area.

- Inspect storage areas before and after rainfall events, and at least weekly during other times.
- Repair and replace perimeter controls, containment structures, and covers as needed to keep them properly functioning.

Limitations

- Space or other construction site limitations may preclude indoor storage.
- Storage sheds often must meet building and fire code requirements.

References **30, 31, 33, 34, 35, 43, 100, 127, 137** (see BMP Manual Chapter 10 for list)

ACTIVITY: Spill Prevention and Control	AM – 07

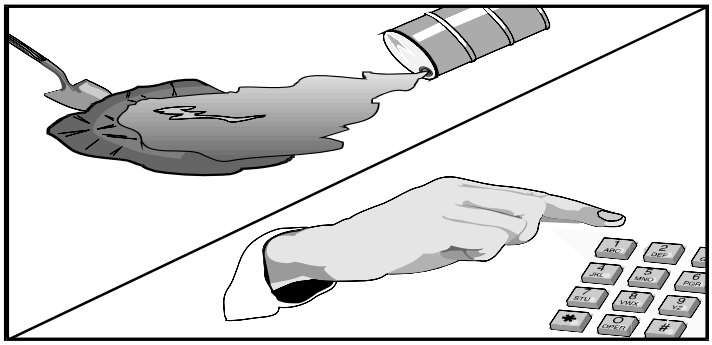

Targeted Constituents

● Significant Benefit ◗ Partial Benefit ○ Low or Unknown Benefit

○ Sediment	● Heavy Metals	◗ Floatable Materials	● Oxygen Demanding Substances	
◗ Nutrients	● Toxic Materials	● Oil & Grease	● Bacteria & Viruses	○ Construction Wastes

Description

Prevent or reduce the discharge of pollutants to storm water from leaks and spills by reducing the chance for spills, stopping the source of spills, containing and cleaning up spills, properly disposing of spill materials, and training employees. This management practice is likely to create a significant reduction in heavy metals, toxic materials, and oil and grease.

This best management practice covers only spill prevention and control. Procedures for material delivery and storage are in the following BMPs:

AM-06 Material Delivery and Storage
IC-02 Outdoor Loading and Unloading of Materials (bulk)
IC-03 Outdoor Container Storage of Liquid Materials

Common materials for which spill prevention and control is required include, but are not limited to:

- Soil stabilizers
- Herbicides and growth-inhibitors
- Fertilizers
- De-icing or anti-icing chemicals
- Fuels
- Lubricants
- Petroleum distillates
- Food products or ingredients
- Food wastes or by-products

The list of hazardous materials and products that are likely to be found at an industrial is almost endless. The prevention of leaks and spills is inexpensive. Treatment and disposal of contaminated soil or water is very expensive. Therefore, it is in everyone's best interest to prevent leaks.

Approach

Report all leaks and spills, in any amount, that could potentially lead to pollution of a storm drainage system, ditch, stream, vegetation, wildlife, or an outdoor surface exposed to rainfall (such as pavement or dirt). The City of Memphis and Shelby County and Tennessee Department of Environment and Conservation (TDEC) require immediate notification of any spill or leak, in any amount, to the water or soil. Contact the Memphis or Shelby County Water Quality Hotline and the TDEC at the numbers listed in Table AM-07-1.

The terms "reportable quantity" or "RQ" (commonly used in federal regulations such as those of the U.S. Department of Transportation and Resource Conservation and Recovery Act) do not apply to storm water monitoring and protection efforts of Memphis and Shelby County or TDEC. The owner or operator should consult appropriate federal regulations to determine how RQ's apply for their hazardous waste.

Leaks and spills will require a different response depending on the volume of the material or chemical. Make sure that each employee knows what a "significant spill" is for each material used, and what is the appropriate response for significant and minor spills. A significant spill should be defined after review of the material safety data sheets (MSDS) and any other documentation that presents the contents and proper handling procedures. Typical instructions for a significant spill or leak will be to call for emergency responders and to place life and safety first. A minor spill can usually be handled by spill prevention materials located nearby, without a loss of safety.

General Measures

- Educate employees and subcontractors on potential dangers to humans and the environment from spills and leaks. Train employees in spill prevention and cleanup procedures for the site. Hazardous materials and wastes must be stored in covered containers and protected from vandalism.

- Establish a continuing education program to indoctrinate new employees. Hold regular meetings to discuss and reinforce appropriate disposal procedures (incorporate into regular safety or production meetings). Discuss MSDS information for each material commonly used.

- Designate a foreman or supervisor to oversee and enforce proper spill prevention and control measures. Place a stockpile of spill cleanup materials where it will be readily accessible. Instruct all employees on locations of cleanup materials. Make sure that each employee knows that he or she is responsible for controlling leaks and spills using spill containment materials. Do not

charge or otherwise garnish pay for employees who use containment materials in the event of a spill or leak.

Cleanup

- Clean up leaks and spills immediately. Never hose down or bury dry material spills. For a quick reference on disposal alternatives for specific wastes, see Table AM-01-1, which is part of the Employee Training BMP fact sheet. Consult AM-15, Vehicle and Equipment Fueling, and AM-16, Vehicle and Equipment Maintenance and Repair, for additional discussion of automotive-related spills.

- On paved surfaces, clean up spills with as little water as possible. Use a rag for small spills, a damp mop for general cleanup, and absorbent material for larger spills. If spilled material is hazardous, then cleanup materials are also hazardous and must be sent to a certified laundry or disposed of as hazardous waste.

- Minor Spills

- Minor spills typically involve small quantities of oil, gasoline, paint, etc., that can be safely controlled by the first responder upon discovery of the spill. Use absorbent materials on small spills rather than hosing down or burying the spill. Remove the absorbent materials promptly and dispose of properly. The practice commonly followed for a minor spill is:

  1. Contain the spread of the spill.
  2. Recover spilled materials.
  3. Clean contaminated area and properly dispose of contaminated materials.

- Significant Spills

- Some significant spills may still be controlled by the first responder along with the aid of other personnel onsite. This response will require the immediate cessation of all other activities to clean up spills immediately. The practice commonly followed for a significant spill is:

  1. Notify the site owner or foreman immediately. Immediate notification to authorities is required for all significant spills. In addition, a written report and other information are generally required during and after the incident.

  2. Determine if available spill response personnel are qualified to perform the cleanup in a safe manner. Alert additional trained personnel as necessary, including 911 for emergency response

and/or a Hazmat team. Contact emergency numbers must be posted throughout facility.

3. Contain spread of the spill in a safe manner when possible. If required, the services of a spill cleanup contractor or Hazmat team shall be obtained immediately. Use a reputable licensed contractor to handle large spills.

4. If the spill occurs on paved or impermeable surfaces, clean up using dry methods (absorbent materials, cat litter, rags). Contain the spill by encircling with absorbent materials and do not let the spill spread widely.

5. If the spill occurs in dirt areas, immediately contain the spill by constructing an earthen dike. Dig up and properly dispose of contaminated soil after the incident is contained.

6. If the spill occurs during rain, cover spill with tarps or other material to prevent contaminating runoff.

7. Table AM-07-1 contains a list of emergency and regulatory phone numbers for use in developing an emergency response plan. Emergency response companies listed in the 2006 phone book are included in the list. Memphis and Shelby County do not endorse any firm listed. Before any spills occur, it would be advisable to contact an emergency response firm to set up an account and to discuss their ability to handle a particular type of incident. Always manage an emergency response company closely to determine when the "emergency" is over and when cleanup activities (with non-emergency rates) can begin. It is recommended that an environmental consultant be hired to assist during this process.

8. Table AM-07-2 provides a cross-reference matrix that identifies specific release scenarios and associated reporting and notification requirements, including respective time frames.

If Memphis or Shelby County is required to use a hazardous materials contractor due to negligence, delay, or lack of response on the part of the responsible party, the negligent party may be billed by Memphis or Shelby County at <u>double the cost</u> to the city or county <u>plus any other applicable punitive penalties</u>.

Maintenance

- Keep ample supplies of spill control and cleanup materials onsite and available. Update Spill Prevention Control Countermeasure Plan and MSDS sheets as changes occur in types of chemicals used.

Limitations

- Procedures and practices presented in this BMP are general. The site owner/ contractor shall identify appropriate practices for specific materials used or stored at the project site.

References **30, 31, 33, 34, 35, 100, 137** (see BMP Manual Chapter 10 for list)

TABLE AM-07-1
IMMEDIATE RESPONSE PROCEDURES
ON-SCENE PERSONNEL

1. **Initiate evacuation, if necessary.**

2. **Notify proper authorities, and report the following information, if it is known or can reasonably be determined:**

   - Name of individual reporting spill
   - Location of spill
   - Number of injured personnel and number of injuries, if applicable
   - Substance spilled
   - Estimated amount spilled
   - Estimated rate at which material is currently spilling
   - Estimated time of spill occurrence
   - Extent of spill travel
   - Necessity of fire department to respond to protect life, property, and environment
   - Any additional pertinent information such as other potential hazards.

3. **Stop spill flow when possible without undue risk of personal injury.**

4. **Contain the spill using whatever means is readily available.**

5. **Make spill scene OFF LIMITS to unauthorized personnel.**

6. **Restrict all sources of ignition when flammable substances are involved.**

7. **Report to the emergency spill response designee upon his/her arrival to the scene.**

EMERGENCY NOTIFICATIONS AND RESPONSE RESOURCES

Table AM-07-1 contains installation and local phone numbers that are to be used to alert personnel of the incident or to request additional assistance.

Table AM-07-1
Emergency Telephone Numbers

Prioritized Contact List	Response Role	Contact Timeline	Day Phone	24 Hour Phone
USEPA, Region 4, Emergency Response (24-hour Hotline)	Regulator	As indicated in Table AM-07-2	(404) 562-8700	(404) 562-8700
USEPA, Region 4, Emergency Response (Main Office)	Regulator	As indicated in Table AM-07-2	(800) 564-9900	(800) 564-9900
U.S. Coast Guard, 8th District Marine Safety Office (for coastal waters)	Regulator	As indicated in Table AM-07-2	(901) 544-3912 x2122	(901) 544-3912 x2122
Tennessee Department of Environment & Conservation (TDEC) Memphis Office	Regulator	As indicated in Table AM-07-2	(901) 368-7939	(800) 262-3300
TN Emergency Management Agency (TEMA) 24-hr	Regulator	As indicated in Table AM-07-2	(800) 262-3300	(800) 262-3300
National Response Center www.nrc.uscg.mil	Receiver of all reports of spills to waters of the U.S., or potential to affect waters.	Immediately	(800) 424-8802	(800) 424-8802
City of Memphis Storm Water Hotline	Regulator	Immediately	(901) 576-6721 Or (901) 576-4349)	
Shelby County Storm Water Hotline	Regulator	Immediately	(901) 545-3870	
City of Memphis Fire Department and Local Emergency Planning Committee (LEPC) within 15 minutes of spill	Emergency Assistance MFD Hazmat	Immediately As needed	911 (901) 320-5368	911 (901) 320-5368
City of Memphis Fire Department	Emergency Assistance	As needed	(901) 458-3311	(901) 458-3311
Ferguson Harbor, Inc.	Spill Response Contractor	As needed	(800) 235-1344	(800) 235-1344
American Environmental Services	Spill Response Contractor	As needed	(901) 344-9272	(901) 344-9272
Hill Services Industrial & Environmental	Spill Response Contractor	As needed	(901) 388 -7500	(901) 388 -7500
Hulcher's Services	Spill Response Contractor	As needed	(800) 637-5471 or (662) 890-5440	(800) 637-5471
First Response	Spill Response Contractor	As needed	(901) 396-9110	(901) 396-9110
Hepaco, Inc	Spill Response Contractor	As needed	(800) 888-7689	(800) 888-7689
OCS, Inc.	Non-Emergency Response Contractor (OSHA 40-hr trained)	As needed	(901) 369-0576	(901) 369-0576

Table AM-07-1
Emergency Telephone Numbers

Prioritized Contact List	Response Role	Contact Timeline	Day Phone	24 Hour Phone
MLGW Emergency	Utility Issues	As needed	(901) 528-4465	(901) 528-4465
Local Health Department	Public Health Concerns	As needed	(901) 576-7600	(901) 576-7600

Note:
The NRC will notify the U.S. Coast Guard and USEPA.

NOTIFICATION REQUIREMENTS

Table AM-07-2 provides a cross-reference matrix that identifies specific release scenarios and associated reporting and notification requirements, including respective timeframes.

Table AM-07-2
Notification Requirements

Scenario No.	Basis For Reporting	Agencies To Contact	Time Frame For Contact	Information To Be Provided
1	Discharge of Petroleum Product to the Grass/Soil — A 25-gallon or greater release of petroleum product to grassy or soil areas must be reported.	A	Within 24 hours	• Location , source(s), time, and duration of the release • Chemical name or identity and of any substance involved in the release • Estimate of the quantity (pounds or gallons) released • The medium (land, water, or air) in which the release occurred or exists • Extent of the release • Any known or anticipated acute or chronic health risks with the release and advice regarding medical attention necessary for exposed individuals • Proper precautions to take as a result of the release or discharge, including evacuation and other proposed response actions • The name and telephone number of the person(s) to be contacted for further information
2	Discharge of Petroleum Product to Surface Water — A discharge of petroleum product that violates 40 CFR 110.6 must be reported. This is basically any amount of petroleum product that reaches surface water (overland or through sewers).	A, B, C, D, E, G	Immediately	Same as Scenario 1 with these additions: • Location of spill and name of receiving water Shelby County Code Section 30-62 requires a written report within 5 days to Memphis and Shelby Emergency Management Agency at: Manager, P.O. Box 111249, Memphis 38111. The following particulars must be included in the report: ▪ A description of the discharge, including an estimate of the volume. ▪ The exact dates, times, and duration of the discharge. ▪ Steps being taken to eliminate and prevent recurrence. ▪ A site drawing showing the location of the spill, direction of flow and topographical grade of the property; the impacted watercourse(s); and the properties adjacent to the spill site.

Notes:

A Tennessee Emergency Management Agency — (800) 262-3300/Local TDEC Office (901) 368-7939
B NRC — (800) 424-8802
C USEPA, Region 4 — (404) 562-8700 (NRC will call)
D U.S. Coast Guard, 8th District Marine Safety Office — (901) 544-3912 x2122 (NRC will call)
E Memphis-Shelby Emergency Management Agency / City of Memphis Fire Department — 458-1515 / 911
F City of Memphis's WWTP — (901) 353-2392
G City of Memphis or Shelby County Storm Water Hotline — City at (901) 576-6721 / County at (901) 545-3870

Table AM-07-2
Notification Requirements

Scenario No.	Basis For Reporting	Agencies To Contact	Time Frame For Contact	Information To Be Provided
3	Discharge of Petroleum Product to Surface Water in Excess of 1,000 gal.— If the facility has a spill in 1,000 gal or has two spills that violate 40 CFR 110.6, a report to the USEPA Regional Administer is required (40 CFR 112.4).	A, B, C, E, G A, C	Immediately Within 3 days of event that violates 40 CFR 112.4	Same as Scenario 2 Written report that describes: • Name of facility • Name(s) of the owner or operator of the facility • Location of the facility • Date and year of initial facility operation • Maximum storage or handling capacity of the facility and normal daily throughput • Description of the facility, including maps, flow diagrams and topographic maps • A complete copy of the SPR Plan with any amendments • The cause(s) of such spill, including a failure analysis of system or subsystem in which failure occurred • The corrective actions and/or countermeasures taken, including an adequate description of equipment repairs and/or replacements • Additional preventive measures taken or contemplated to minimize the possibility of reoccurrence • Such other information as the Regional Administrator may reasonably require pertinent to the Plan or spill event

Notes:

A Tennessee Emergency Management Agency - (800) 262-3300/Local TDEC Office (901) 368-7939
B NRC — (800) 424-8802
C USEPA, Region 4 — (404) 562-8700 (NRC will call)
D U.S. Coast Guard, 8th District Marine Safety Office — (901) 544-3912 x2122 (NRC will call)
E Memphis-Shelby Emergency Management Agency / City of Memphis Fire Department — 458-1515 / 911
F City of Memphis's WWTP — (901) 353-2392
G City of Memphis or Shelby County Storm Water Hotline — City at (901) 576-6721 / County at (901) 545-3870

Table AM-07-2
Notification Requirements

Scenario No.	Basis For Reporting	Agencies To Contact	Time Frame For Contact	Information To Be Provided 44
4	Spill of Hazardous Substances in Excess of the Reportable Quantity — Table 302.4 (40 CFR 302.4 and Attachment K of this SPR) lists the spill quantity of hazardous substances that triggers reporting under 40 CFR 302. (Use "Final RQ" column) If a hazardous substance does not have a reportable quantity, use 100 pounds.	A, B, C, G E	Immediately Within 2 hours	• Facility name and address • Reporter's name and phone number • Type and quantity of material spilled • Time of spill • Is spill continuing? • Location of spill • Current response action 5
5	Discharge to Sanitary Sewer — Accidental spill of petroleum product, hazardous waste/material, or any other material which by reason of their nature or quantity are sufficient to cause fire or explosion or be injurious in any other way to the sewerage system or to the operation of the waste reclamation facilities.	A, E, F B, E	Immediately Immediately (depending upon substance and quantity)	• Facility name and address • Reporter's name and phone number • Type and quantity of material spilled • Time of spill • Is spill continuing? • Location of spill • Current response action

Notes:

A Tennessee Emergency Management Agency - (800) 262-3300/Local TDEC Office (901) 368-7939
B NRC — (800) 424-8802
C USEPA, Region 4 — (404) 562-8700 (NRC will call)
D U.S. Coast Guard, 8th District Marine Safety Office — (901) 544-3912 x2122 (NRC will call)
E Memphis-Shelby Emergency Management Agency / City of Memphis Fire Department — 458-1515 / 911
F City of Memphis's WWTP — (901) 353-2392
G City of Memphis or Shelby County Storm Water Hotline — City at (901) 576-6721 / County at (901) 545-3870

ACTIVITY: Waste Management and Recycling	AM – 08

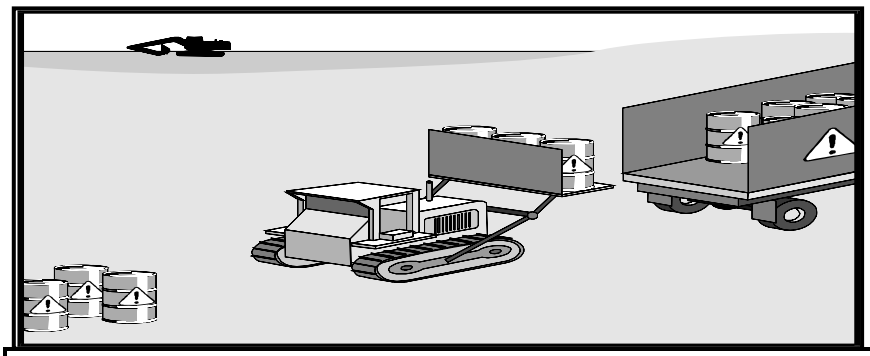

Targeted Constituents

● Significant Benefit ◗ Partial Benefit ○ Low or Unknown Benefit

○ Sediment	● Heavy Metals	● Floatable Materials	● Oxygen Demanding Substances	
● Nutrients	● Toxic Materials	● Oil & Grease	● Bacteria & Viruses	● Construction Wastes

Description

Keep refuse containers covered to eliminate exposure to wind, rain, and snow and, where possible, do not locate in areas that drain to the storm water system

Prevent or reduce the discharge of pollutants to the storm water system or natural streams by effective management of waste materials. Primary approaches include educating and training employees and subcontractors, proper material use, source reduction, tracking waste generation and disposal, proper material storage, recycling, preventing storm water contact and runoff from waste management areas, and good waste disposal procedures.

Proper recycling is greatly encouraged by Memphis and Shelby County in order to reduce the amount of landfilled waste. Effective waste management and recycling is likely to create a significant reduction in the manner and volume of pollution that enters the city storm drainage system and natural channels.

Approach

For a quick reference on disposal alternatives for common construction wastes, see Table AM-01-1, which is part of the Employee Training BMP fact sheet.

Consult the City of Memphis at 576-6508 or BFI 794-3800 respectively for the types of materials that are accepted at the Solid Waste Management Facility (SWMF). In addition, contact the Shelby County Environmental Program Coordinator at 379-4410 for information about Household Hazardous Waste Collection.

The specific topic of waste management is also included in other BMPs:

AM-18 Concrete Waste Management
IC-10 Dumpsters
RH-06 Household Solid and Hazardous Waste

Therefore, this BMP will deal principally with the overall scope and effort necessary for a waste management program.

Education and Training

- Thoroughly train employees in proper handling and disposal of waste materials at the site or facility. Hold regular meetings to discuss and reinforce disposal procedures (incorporate into regular production meetings or into safety meetings).

- Designate a foreman or supervisor to oversee and enforce proper solid waste management procedures and practices, including recycling. Select assistants or alternates so that a responsible person is always at the site or facility.

- Educate employees and subcontractors on hazardous waste storage and disposal procedures, including periodic review of the material safety data sheets (MSDS). Educate employees and subcontractors of potential dangers to humans and the environment from hazardous waste.

- Instruct employees and subcontractors in identification of hazardous and solid waste. Make sure that hazardous waste is collected, removed, and disposed only at authorized disposal areas.

Solid Waste Management

- Ensure that all wastes placed inside garbage carts are in closed plastic bags.

- Designate waste storage areas that are away from storm drain inlets, storm water facilities, or watercourses. Provide waste containers in areas where employees congregate for breaks and lunch.

- Do not place liquids inside garbage carts.

- Watertight Dumpsters are preferred for use and should be requested from trash-hauling contractors. Inspect Dumpsters for leaks or open drain valves; repair any Dumpster that is not watertight. Leave drain valve in the closed position. Do not hose out Dumpsters on the project site. Let the trash-hauling contractor take care of Dumpster cleaning.

- Arrange for regular waste collection before containers overflow. Provide adequate number of covered containers to keep rain out

and prevent loss of waste during heavy winds. For site demolition, order additional containers and more frequent trash pickup.

- Segregate potentially hazardous waste from non-hazardous site waste. Provide hazardous waste containers in a covered area with secondary containment.

- Make sure that toxic liquid wastes (used oils, solvents, and paints) and chemicals (acids, pesticides, additives, curing compounds) are not placed or

  poured into Dumpsters. Inspect Dumpsters daily for hazardous materials that need to be disposed in a different manner.

- Salvage or recycle any useful material. For example, trees and shrubs from land clearing can be used as a brush barrier or converted into wood chips to be used as mulch on graded areas.

Hazardous Waste Management

- Use the entire product before disposing of the container. If the product is wet or moist, allow container to dry prior to disposal. Do not remove the original product label; it contains important safety and disposal information. MSDS information should be consulted for each product that is stored or handled. Employees should be made aware of the safety information.

- Minimize production or generation of hazardous materials and hazardous waste onsite. Designate hazardous waste storage areas onsite, away from storm drains or watercourses. Ensure that adequate hazardous waste storage volume is available.

- Use containment berms in fueling and maintenance areas and where the potential for spills is high. Keep liquid hazardous waste in appropriate containers and under cover. Place hazardous waste containers in secondary containment. Do not allow potentially hazardous waste materials to accumulate on the ground.

- Segregate potentially hazardous waste from non-hazardous waste. Store hazardous materials and wastes in covered containers and protected from vandalism.

- Do not mix wastes because this can cause unforeseen chemical reactions. Recycling will no longer be possible and disposal options will be complicated.

- Minimize spills and fugitive losses such as dust or mist from loading systems.

- Maintain usage inventory to limit waste generation. Eliminate or substitute less hazardous materials when possible.

- Superfund Amendments and Reauthorization Act of 1986 (SARA) Title III, Section 313 requires reporting for hundreds of listed chemicals and chemical compounds. This federal regulation includes requirements such as the public's right-to-know and emergency preparedness plans.

- Keep records on hazardous waste generated to include the following information:

  - Characterization of waste stream, including production date
  - Process that generated the waste
  - Inventory reports, manifests
  - Environmental reports such as environmental audits, SARA Title III reports, emission reports, National Pollution Discharge Elimination System (NPDES) monitoring reports
  - Emissions, spills, leaks

- Use raw material and production data as a source of information, including composition sheets, MSDS, batch sheets, product or raw material inventory records, production schedule, and operator data log.

- Modify process or equipment to reduce waste generation or to contain waste more safely. Plan production sequencing to limit exposure of hazardous waste to rainfall during transfer or disposal. Review design data, process flow diagram, materials and applications diagram, piping data, and equipment lists for efficiency and safety.

- Check waste management areas for spills and leaks. Cover or enclose industrial wastewater management areas whenever possible to prevent contact with rainfall or storm water runoff. Equip waste transport vehicles with spill containment.

Maintenance

- Arrange for regular solid waste collection and disposal. Arrange for collection and disposition of recycling materials on a regular basis.

- Inspect waste areas frequently, particularly areas containing hazardous materials.

- Keep an updated inventory of hazardous materials and chemicals at the site or facility. Monitor onsite hazardous waste storage and disposal procedures.

Limitations

- This practice is not intended to address site assessments and pre-existing contamination onsite. This program does not address demolition activities such as asbestos removal.
- Major contamination, large spills, and other serious hazardous waste incidents require immediate response from specialists. Prepare for possible emergencies using the guidelines in AM-07, Spill Prevention and Control.
- A licensed hazardous waste hauler must dispose of hazardous waste that cannot be reused or recycled.

References

30, 31, 33, 34, 35, 43, 100, 134, 137 (see BMP Manual Chapter 10 for list)

ACTIVITY: Sanitary and Septic Waste Management	AM – 09

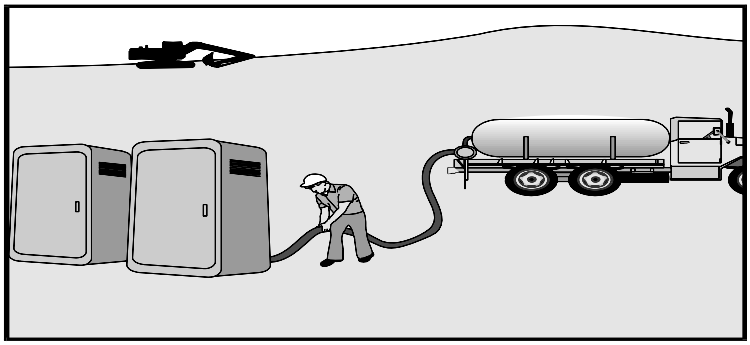

Targeted Constituents

● Significant Benefit ◗ Partial Benefit ○ Low or Unknown Benefit

○ Sediment	○ Heavy Metals	○ Floatable Materials	● Oxygen Demanding Substances	
● Nutrients	○ Toxic Materials	○ Oil & Grease	● Bacteria & Viruses	○ Construction Wastes

Description

Prevent or reduce the discharge of pollutants from sanitary and septic waste to the storm water system and natural streams. Provide convenient and well-maintained restroom facilities or portable toilets. Arrange for permanent connections to the sanitary sewer system or schedule for regular service and disposal. This management practice will significantly reduce nutrients, bacteria and viruses, and oxygen demanding substances.

Approach

Sanitary and septic waste includes:

- Human wastes
- Wastewater from toilets, sinks, dishwashers, washing machines, and other indoor plumbing fixtures
- Wastewater from kitchens and restaurants
- Wastewater from industries and commercial establishments

These types of wastes, as well as animal and pet wastes, carry harmful viruses and bacteria that spread disease. It is important to prevent direct and indirect human contact with these types of waste flow.

Application

In addition to properly disposing of sanitary waste, it is very important to protect the existing sanitary sewer system. Protect existing sanitary cleanouts from damage. Do not operate heavy equipment or compact soils over an existing sanitary sewer line or lateral. See RH-07 for additional information on protecting sanitary sewer laterals.

Temporary Sanitary Facilities

- Construction sites, as well as other temporary activities, may use stand-alone portable toilets or temporary offices that utilize holding tanks for sewage. Portable toilets and holding tanks should be installed and serviced regularly by a licensed contractor well in advance of the holding tank reaching full capacity.

- Arrange for regular waste collection by a licensed hauler before holding tank reaches capacity and overflows. Maintain and protect temporary facilities to prevent leaks and spills. Anchor portable toilets from blowing over or being turned over by vandals. Maintain and protect portable toilets from damage by traffic or equipment.

- Temporary offices or shower trailers may choose to connect to the municipal sanitary sewer system using the same standards as a permanent connection, which involves inspection and permitting by the City of Memphis Sanitary Sewer Department (529-8025).

Permanent Connection to Sanitary Sewer System

- See RH-07, Sanitary Sewer Laterals and Septic Tanks for a discussion of repair and maintenance issues for sanitary sewer laterals, particularly for residential connections. Sanitary laterals must be regularly inspected to ensure proper function. Repair broken sanitary laterals promptly.

- Do not install an onsite disposal system (such as a septic tank) within Memphis and Shelby County without written permission from the Memphis and Shelby County Health Department. Septic tanks are not allowed unless no municipal sanitary sewer system connections are available and sufficient hardship exists to warrant a variance.

- Existing privately owned septic facilities must be maintained in good working order. If a private septic system fails to function properly, the owner must hook into the municipal sanitary sewer system.

- All temporary and permanent connections to the municipal sanitary sewer system must be inspected and approved by the City of Memphis Sanitary Sewer Department prior to installation. Contact them at 529-8025 for construction procedures and testing requirements.

Maintenance

- Inspect facilities regularly to verify that sanitary and septic waste is not being discharged inadvertently. Inspection is normally done during dry weather to determine whether a discharge occurs; see IC-01, Non-Storm-Water Discharges to Storm Drains, for methods to detect illicit discharges to the storm drainage system or to natural streams.

- Inspect sanitary sewer manholes and cleanouts during dry weather and rainy weather. Determine if excess groundwater or storm water is entering the sanitary sewer system. Document the inspection results for future reference.

References **30, 31, 33, 34, 35, 43, 137** (see BMP Manual Chapter 10 for list)

ACTIVITY: Contaminated Soil Management	AM – 10

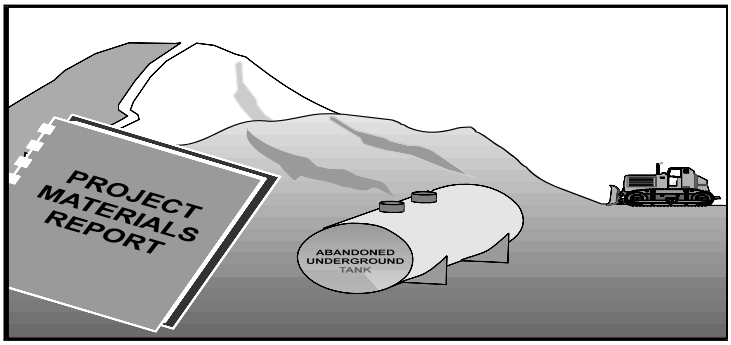

Targeted Constituents

● Significant Benefit ◗ Partial Benefit ○ Low or Unknown Benefit

◗ Sediment	● Heavy Metals	○ Floatable Materials	○ Oxygen Demanding Substances	
○ Nutrients	● Toxic Materials	○ Oil & Grease	○ Bacteria & Viruses	○ Construction Wastes

Description

Prevent or reduce the discharge of pollutants to storm water from contaminated soil and highly acidic or alkaline soils by conducting pre-construction surveys, inspecting excavations regularly, and remediating contaminated soil promptly. This management practice is likely to create a significant reduction in toxic materials and heavy metals as well as a partial reduction in sediment.

Suitable Applications

- Applicable to many construction projects, especially those in highly urbanized or industrial areas, where soil contamination may have occurred due to spills, illicit discharges, and underground storage tanks.

- Applicable to highway widening projects in older areas where median and shoulder soils may have been contaminated by aerially deposited lead from vehicle emissions.

Approach

Contaminated soils are often reflected in the project material report with known locations identified in the plans and specifications. The contractor shall review applicable reports and investigate appropriate callouts in the plans and specifications.

Contaminated soils may occur on a site for several reasons including:

- Past site uses and activities
- Known spills and leaks
- Undetected spills and leaks
- Acid or alkaline solutions from exposed soil or rock formations
- Contaminated groundwater or leach water from nearby properties

Most developers conduct pre-construction environmental assessments as a matter of routine. Recent court rulings have held contractors liable for

cleanup costs when they unknowingly move contaminated soil. Therefore, it is necessary for contractors to confirm that a site assessment is completed before earth moving begins.

Prevention of leaks and spills is very inexpensive when compared to the cost of treatment and disposal of contaminated soil. Leaks and spills reduce property values and may severely limit future land uses.

- Conduct thorough site planning to include pre-construction site assessments. Include information from geologic surveys to determine extent of acidic or alkaline rock formations. Sample soils according to proper statistical methods.

- Look for contaminated soil as evidenced by discoloration, odors, differences in soil properties, abandoned underground tanks or pipes, or buried debris.

- Prevent leaks and spills to the maximum extent practicable. Contaminated soil can be expensive to treat and/or dispose of properly. However, addressing the problem before construction is much less expensive than after the structures are in place. For a quick reference on disposal alternatives for specific wastes, see the Table AM-01-1 presented in the Employee Training BMP fact sheet.

Federal and State Regulators

Excavation, transport, and disposal of contaminated material and hazardous material shall be in accordance with the rules and regulations of the following agencies:

- United States Department of Transportation (USDOT)
- United States Environmental Protection Agency (USEPA)
- Tennessee Department of Environment and Conservation (TDEC)
- Tennessee Division of Occupation Safety and Health Administration

This BMP does not discuss environmental laws and regulations, nor does it include procedures for how to conduct excavation and remediation of contaminated soils. Therefore, it is highly recommended that contaminated and hazardous materials be excavated and transported by licensed contracting firms that are experienced in this type of work and that meet USEPA and USDOT regulations.

Education

- Prior to performing any excavation work at locations containing contaminated or hazardous materials, employees and subcontractors

shall complete a safety training program. Educate employees and subcontractors on contaminated soil handling and disposal procedures. Instruct employees and subcontractors in identification of contaminated soil.

- Hold regular meetings to discuss and reinforce disposal procedures (incorporate into regular safety meetings). Provide additional training for field supervisors and inspectors, including hazardous material safety training.

Handling Procedures for Material with Aerially Deposited Lead

- In some instances, soils that contain aerially deposited lead may be excavated, transported, and used in the construction of embankments and/or backfill. Consult contract specifications and site assessment reports for handling recommendations.

- Excavation, transportation, and placement operations shall result in no visible dust. Use caution to prevent spillage of lead containing material during transport. Monitor the air quality during excavation of soils contaminated with lead.

Handling Procedures for Contaminated Soils or Hazardous Materials

- Test suspected soils at a certified laboratory as soon as possible. If the soil is contaminated, work with TDEC to develop options for treatment and disposal.

- Procure all permits and licenses, pay all charges and fees, and give all notices necessary and incident to the due and lawful prosecution of the work, including registration for transporting vehicles carrying the contaminated material and the hazardous material.

- Monitor the air quality continuously during excavation operations at all locations containing hazardous material in order to protect workers and the general public. Install temporary security fence to surround and secure the exclusion zone. Remove fencing when no longer needed.

- Avoid temporary stockpiling of suspected contaminated soils or hazardous material. If temporary stockpiling is necessary:

  1. Use plastic sheeting or tarps beneath the temporary stockpile.

2. Install a berm or physical barrier around the stockpile to prevent runoff from leaving the area. Do not stockpile near storm drains or watercourses.

3. Cover the stockpile with plastic sheeting or tarps. Covers must be securely fastened to prevent removal by strong winds.

- Verify that all personnel and equipment leaving the excavation area are clean. Contaminated soils and hazardous material on exteriors of transport vehicles shall be removed and placed either into the current transport vehicle or the excavation prior to the vehicle leaving the exclusion zone.

- Collect water from decontamination procedures and dispose at an appropriate disposal site.

- Collect non-reusable personal protective equipment (PPE) and other disposable equipment and supplies. Dispose at an appropriate disposal site licensed for hazardous wastes.

Procedures for Underground Storage Tank Removals

- Prior to commencing tank removal operations, obtain the required underground storage tank removal permits and approval from TDEC, which has jurisdiction over such work. Procure all permits and licenses, pay all charges and fees, and give all notices necessary and incident to the due and lawful prosecution of the work, including registration for transporting vehicles carrying the contaminated material and the hazardous material.

- Arrange to have tested, as soon as possible, any liquid or sludge found in the underground tank prior to its removal to determine if it contains hazardous material.

- Following the tank removal, take soil samples beneath the excavated tank and perform analysis as required by TDEC or other agency representatives.

- The underground storage tank, any liquid or sludge found within the tank, and all contaminated material and hazardous material removed during the tank removal shall be transported to disposal facilities permitted to accept such material by a licensed hazardous waste hauler.

Contaminated Water in Excavations

- Take all necessary precautions and measures to prevent the flow of water, including ground water, from entering hazardous material or underground storage tank excavations. Such preventive measures may consist of berms, cofferdams, grout curtains, freeze walls, concrete caps, or other measures.

- If water does enter an excavation and becomes contaminated, such water shall be discharged to holding tanks that are clean and watertight. Holding tanks may be transportable or can be emptied by proper equipment to minimize the potential for spills and leaks. Contaminated water shall be disposed in accordance with federal, state, and local laws. Presence of contaminated soil may also indicate contaminated water. Consult AM-12, Dewatering Operations, for options concerning contaminated water in excavations.

Maintenance

- Inspect all excavated areas daily for indications of contaminated soil.

- Prevent spills and leaks from occurring by using the recommendations found within AM-07, Spill Prevention and Control.

- Monitor air quality continuously during excavation operations at all locations containing hazardous material.

- Coordinate contaminated soils and hazardous material management with the appropriate federal, state, and local agencies.

- Inspect hazardous waste receptacles and areas regularly.

Limitations

- The procedures and practices presented in this BMP are general. The contractor or property owner shall identify appropriate practices and procedures for the specific contaminants known to exist or that are discovered onsite.

- Contaminated soils that cannot be treated onsite must be disposed offsite by a licensed hazardous waste hauler.

References **30, 31, 33, 34, 35, 100, 134, 137** (see BMP Manual Chapter 10 for list)

ACTIVITY: Dust Control	AM – 11

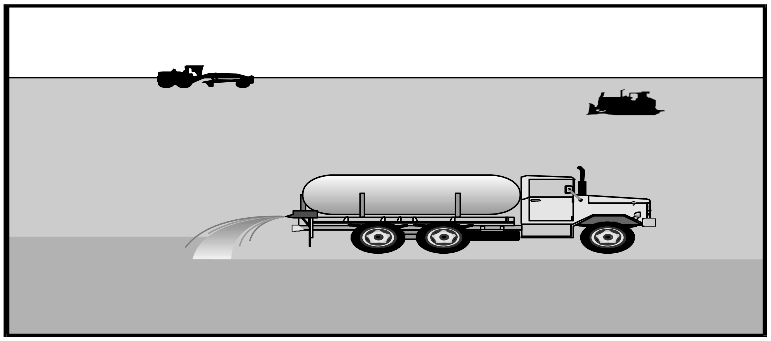

Targeted Constituents

● Significant Benefit ◗ Partial Benefit ○ Low or Unknown Benefit

● Sediment	○ Heavy Metals	○ Floatable Materials	○ Oxygen Demanding Substances	
○ Nutrients	◗ Toxic Materials	◗ Oil & Grease	○ Bacteria & Viruses	○ Construction Wastes

Description

Dust control measures are necessary to stabilize soil from wind erosion and to reduce dust generated by construction activities. Dust is a nuisance and pollution source by itself or may pollute storm water runoff. Dust control is considered primarily as a temporary measure after disturbance in construction and prior to surface stabilization such as paving or vegetation. This management practice is likely to create a significant reduction in sediment as well as partial reductions in toxic materials and oil and grease.

Suitable Applications

The following construction activities will generally require some type of dust control measures:

- Clearing and grading activities
- Construction vehicle traffic on temporary roads
- Drilling and blasting activities
- Sediment tracking onto paved roads
- Soil and debris storage piles
- Batch drop from front-end loaders and other construction equipment
- Areas with unstabilized soil

■ Final grading and site stabilization usually is sufficient to control post-construction dust sources.

■ Dust control is particularly important in windy or wind-prone areas, such as the top of hills or near public roads.

Approach

■ Schedule construction activities to minimize exposed area by clearing only areas where phased construction is to take place. Identify and stabilize key access points prior to commencement ofconstruction. Pave or chemically stabilize access points where unpaved traffic surfaces adjoin paved roads.

- Quickly stabilize exposed soils using vegetation, mulching, spray-on adhesives, calcium chloride, water sprinkling, or gravel. Consult Table AM-11-1 for types of BMPs that can help to stabilize different types of ground conditions.

- Minimize the impact of dust by anticipating the direction of prevailing winds. Maintain existing vegetation as windbreaks whenever possible. Use temporary stabilization methods or place undisturbed vegetative buffers between areas being graded and adjacent properties.

- Direct most construction traffic to stabilized roadways within the project site. Limit vehicle traffic to low speeds (typically 15 miles per hour) and control the number and activity of vehicles onsite at any given time. Plan ahead so that vehicles can be used efficiently.

- Wet suppression (or watering), chemical dust suppression, gravel or asphalt surfacing, temporary gravel construction entrances, equipment washdown areas, and haul truck covers can be employed as dust control applications for heavily traveled areas. Temporary or permanent vegetation, mulching, and sand fences can be employed for areas of occasional or no construction traffic. If the wet suppression method is chosen, be sure the runoff is routed to a sediment control device, such as a sediment pond, check dam, etc.

- Provide covers for haul trucks transporting materials that may contribute to dust.

- Provide for rapid cleanup of sediments deposited on paved roads. Furnish stabilized construction road entrances and vehicle washdown areas. Consult BMP fact sheets for ES-01, Stabilized Construction Entrance; ES-02, Tire Washrack; and ES-03, Construction Road Stabilization.

- Implement dust control measures for material stockpiles.

- Prevent drainage of sediment-laden storm water onto paved surfaces.

- Stabilize abandoned construction sites using vegetation or chemical stabilization methods.

For chemical stabilization, there are many products available for gravel roadways and stockpiles. The types of chemicals available and recommendations for their use are listed in Table AM-11-2, Commonly Used Chemicals for Dust Control.

Selection of Dust Control Agents

Selection of dust control agents should be based primarily on cost effectiveness and environmental hazards. Choose appropriate dust control agents near environmentally sensitive areas, such as wetlands or natural streams.

Chemical methods contain dust-suppressant or dust-binding agents applied to the soil surface to bind finer particles together. Chemical dust control agents must be environmentally benign, easily applied, easily maintained, and economical.

Most chemical dust control agents are inorganic compounds that are compatible with soil and biota. After application, the compounds dampen and penetrate into the soil (with a hygroscopic reaction pulling additional moisture from the atmosphere). This allows the chemicals to adhere fines to the aggregate surface particles. Some compounds may not penetrate soil surfaces made of silt or clay, so soil tests may be required to determine suitability.

Key factors in determining the method include the following:

- Soil types and surface materials — both fines and moisture content are key properties of surface materials.

- Properties of the chemical agent — the five most important properties are penetration, evaporation, resistance to leaching, abrasion, and aging.

- Traffic volumes — the effectiveness and life span of dust control agents decreases as traffic increases. For high-traffic areas, agents need to have strong penetrating and stabilizing capabilities.

- Climate — some hygroscopic agents lose their moisture-absorbing abilities with lower relative humidity, and some may lose resilience. Under rainy conditions, some agents may become slippery or even leach out of the soil.

- Environmental requirements — the primary environmental concern is the presence and concentration of heavy metals in the agent that may leach into the immediate ecosystem, depending on the soil properties.

- Frequencies of application — rates and frequencies of application are based on the type of agent selected, the degree of dust control required, subgrade conditions, surface type, traffic volumes, types of vehicles and their speeds, climate, and maintenance schedule.

General Application Guidelines

For dust control agents, the untreated soil surface must first contain sufficient moisture to assist the agent in achieving uniform distribution (except when using a highly resinous adhesive agent). Consult detailed manufacturer's instructions for dust control agents prior to use. The following guidelines should be considered:

- Ideally, application should begin in the spring, prior to the summer heat so that the subgrade and surface materials will not have dried. If the surface has minimal natural moisture, the area to be protected must be pre-wetted so that the chemicals can uniformly penetrate the surface.

- In general, cooler temperatures or higher humidity will cause decreased evaporation, increased surface moisture, and thus significant increase in control efficiency. However, chemical and organic agents should not be applied under frozen conditions, rainy conditions, or when the temperature is below 40° F. Tar and bitumen agents should not be applied in fog or rainy conditions, or when the temperature is below 55° F.

- More than one treatment with salts or organic compounds per year may be necessary if the construction schedule requires heavy truck and equipment traffic for extended time periods. Generally the second treatment should be significantly diluted.

Maintenance

- Most dust control measures require frequent attention and should be monitored throughout the day. If dust control problems are noted, stop work and immediately concentrate on using additional dust control measures.

- The primary maintenance requirement is the reapplication of the selected dust control agent at intervals appropriate to the agent type. High-traffic areas shall be inspected on a daily basis, and lower traffic areas shall be inspected on a weekly basis.

Limitations

- Watering prevents dust only for a short period and should be applied daily (or more often) to be effective.

- Over watering may cause erosion. This potential can be limited through use of buffer/filter strips, silt fences, straw bales, vegetation, etc.

- Oil must not be used for dust control. Oil will cause immediate storm water pollution and may contaminate groundwater. The use of oil for dust control will be considered as an intentional spill of hazardous material.

- Chemically treated subgrades may make the soil water repellant, interfering with long-term infiltration and growing vegetation on the site. Some chemical dust suppressants are subject to freezing and may contain solvents that must be handled carefully.

- Asphalt, commonly used as a mulch tack or as a component of hydroseeding, requires a 24-hour curing time to avoid adherence to equipment, worker shoes, etc. Application should be limited because asphalt surfacing may eventually migrate into the drainage system.

- In compacted areas, watering and other liquid dust control measures may wash sediment or other constituents into the drainage system.

Additional Information

State and local agencies require dust control in order to comply with local nuisance laws, opacity laws (visibility impairment), and the requirements of the Clean Air Act.

References

13, 14, 24, 30, 31, 33, 34, 35, 43 (see BMP Manual Chapter 10 for list)

Table AM-11-1
BMPs for Dust Control

BMPs	***Site Conditions***				
	Disturbed Areas Not Subject to Traffic	**Disturbed Areas Subject to Traffic**	**Roads and Traffic Areas**	**Material Stockpiles**	**Demolition Work**
Minimize Extent of Disturbed Area	X	X	X	X	X
Temporary Vegetation	X	X		X	
Permanent Vegetation	X				
Mulch	X				
Geotextiles	X	X	X	X	
Gravel Surfacing		X	X		
Asphalt or Concrete Surfacing			X		
Silt Fences or Sand Fences	X			X	
Equipment Washdown Area			X		
Tire Washrack or Construction Entrance		X	X		
Haul Truck Covers		X	X		X
Dust Suppression by Chemicals	X	X	X	X	
Dust Suppression by Watering	X	X	X	X	X

Table AM-11-2
Commonly Used Chemicals For Dust Control

	Salts	Organic	Petroleum Based
Chemical Types	Calcium Chloride Magnesium Chloride Natural Brines	Calcium Lignosulfonate Sodium Lignosulfonate Ammonium Lignosulfonate	Bunker Oil Asphalt Primer Emulsified Asphalt
Limitations	Can lose effectiveness in dry periods with low humidity. Leaches from roadways in heavy rains. Not recommended for gravel roads with low amounts of fine material. Typically used for 10% to 20% fines.	Not affected by dry weather and low humidity. Leaches from roadway in heavy rains if not sufficiently cured. Best performance on gravel roads with high amounts of fine material (10% to 30%) and densely compacted surfaces.	Generally effective in all types of rainfall, including heavy downpours. Tendency to cause potholes during extended periods of wet weather. Best performance on gravel roads with low amount of fine material (5% to 10%).
Comments	Calcium chloride is the least expensive and most popular type of dust control chemical. It may become slippery when wet on gravel surfaces with high amounts of fine material.	Organic, non-petroleum chemical treatment is generally ineffective on gravel surfaces with low amounts of fine material. May become slippery when wet on gravel surfaces with high amounts of fine material.	Petroleum-based products create a hardened crust on the surface; subject to damage from settling or compaction of roadway. Do not use bituminous prime coats or tack coats as dust control measures, due to adverse effects on plant life and groundwater.

ACTIVITY: Dewatering Operations	AM – 12

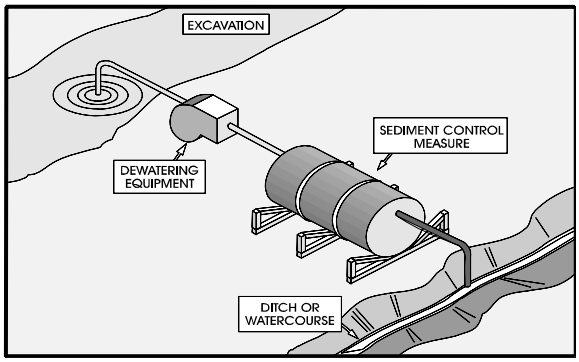

Targeted Constituents

● Significant Benefit ◗ Partial Benefit ○ Low or Unknown Benefit

● Sediment	◗ Heavy Metals	○ Floatable Materials	○ Oxygen Demanding Substances	
○ Nutrients	◗ Toxic Materials	◗ Oil & Grease	○ Bacteria & Viruses	○ Construction Wastes

Description

Prevent or reduce the discharge of pollutants to storm water systems and natural streams from dewatering operations by using sediment controls and by testing the groundwater for pollutant accumulation. This management practice is likely to create a significant reduction in sediment and may contribute to a partial reduction in toxic materials, heavy metals, or petroleum products.

Approach

There are two general classes of pollutants that may result from dewatering operations: 1) sediment and 2) toxic materials, petroleum products, or other dissolved pollutants. This BMP will only address sediment removal from dewatering operations.

Large amounts of sediment in dewatering discharges are common due to the nature of the operation. On the other hand, toxic materials and petroleum products are not commonly found in dewatering discharges unless the site or surrounding area has been used for industrial activities. A site assessment prior to construction or development will reveal whether the area has a history of groundwater contamination.

This BMP only addresses the capture of sediments through the use of filtering devices. If it is determined that dewatering will result in transfer or accumulation of toxic materials or petroleum products, then the Tennessee Department of Environment and Conservation (TDEC) must be consulted before any dewatering activities take place.

Use sediment controls to remove sediment from water generated by dewatering. This may include techniques presented in the attached figures, the use of sediment traps or sediment basins, or other filtering methods.

Monitor discharge water continuously. Suspend operations immediately if sediment or other pollutants is being discharged.

Types of sediment filtration methods include:

- Portable sediment tank
- Filter box
- Straw bale/silt fence pit
- Commercially available geotextile filter products
- Filtration through aggregate and silt fence cloth

The minimum volume formula for sizing the filtration devices (except for the commercially available devices) is:

$V = 16\ Q$ where V = volume of required storage (cubic feet)
Q = pump discharge (gallons per minute)

Locate sediment filtration devices to minimize interference with construction activities. Position filtration devices for easy cleanout and disposal of trapped sediment. A stable access path should be provided for vehicles to access the larger structural filtration devices, such as the portable sediment tank or the filter box.

Filter Box

- A typical filter box is shown in Figure AM-12-1. The box should be made of steel, sturdy wood, or other materials suitable to handle the pressure requirements imposed by the water and sediment. A common application consists of 55-gallon drums welded top to bottom.

- Make bottom of the filter box porous by drilling holes. Place aggregate base in the bottom of the filter box to a minimum depth of 12 inches. Metal screens may be needed beneath the aggregate to retain the stone.

- Direct effluent over a well-vegetated strip with a flow path of at least 50 feet. The effluent discharge point may be relocated to discharge to other well-vegetated strips as needed.

- When water level nears the top of the filter box, shut off the pump while the filter box drains. Design the filter box to allow for emergency flow through top of filter box.

- If the aggregate filter becomes clogged with sediment, the stones must be cleared from the inlet, cleaned, and then replaced. Clean out tank when one-third of the original capacity is depleted

due to sediment accumulations. Clearly mark tank to show the cleanout point.

Portable Sediment Tank

- A typical portable sediment tank is shown in Figure AM-12-2. Construct with steel drums, sturdy wood, or other material suitable for handling the pressure exerted by the water and sediment. The tank should be sturdy enough to enable transfer offsite under fully loaded conditions.

- Design a system of baffles, using openings at the top or bottom sections of joined steel drums, so that sediment is captured from pumped water prior to reaching the last drum.

- Direct effluent over a well-vegetated strip with a flow path of at least 50 feet. The effluent discharge point may be relocated to discharge to other well-vegetated strips as needed.

- When water level nears the top of tank, shut off the pump while the tank drains. Design the tank to allow for emergency flow through top of tank.

- Sediment tank minimum depth is 24 inches. Clean out tank when one-third of the original capacity is depleted due to sediment accumulations. Clearly mark tank to show the cleanout point.

Straw Bale/Silt Fence Pit

- A typical straw bale/silt fence pit is another option for dewatering operations. The excavated area should be a minimum of 3 feet below the base of the straw bales. Installation guidelines for straw bales should be in accordance with ES-15, Straw Bale Barrier. Silt fence fabric should be in accordance with ES-14, Silt Fence, and installed to cover the entire inside face of the straw bale dikes. Securely fasten silt fence above and below the straw bale barrier.

- The storage volume consists of two parts: the temporary filter volume and the wet storage pit. The temporary filter volume is essentially the working volume of the filtration device. The wet storage pit is intended for sediment storage and may be dewatered by pumping through a geotextile filter after a minimum of six hours time for sediment to settle.

- Direct effluent over a well-vegetated strip with a flow path of at least 50 feet. The effluent discharge point may be relocated to discharge to other well-vegetated strips as needed.

- When water level nears the crest of the stone weir (emergency overflow), shut off the pump while the structure drains down to the top of the wet storage pit. When the wet storage pit becomes filled to one-half of the excavated depth, accumulated sediment shall be removed and properly disposed.

Commercially Available Geotextile Filter Products

- There are many commercial products that are designed as filters for dewatering operations. Most products utilize geotextile material or fabric in the form of various-sized bags, tubes, and packs.

- Design the filter bag, tube, or pack according to the dewatering discharge requirements and manufacturer's recommendations. If it is determined that the filter bag, tube, or pack is ineffective, then another type of filtration device may be required. Due to the soils in the Memphis area, filtration with silt fence can be quickly clogged. Designers should evaluate alternatives.

- Direct effluent over a well-vegetated strip with a flow path of at least 50 feet after leaving the filter. The effluent discharge point may be relocated to discharge to other well-vegetated strips as needed.

- The filters must be capable of being removed from the site without tearing or other accidental loss of material. Alternatively, the filter can be placed in a slotted grate or other containment that allows for additional drainage and easier site removal. If it is determined that the sediment does not contain pollutants, then the captured material may be used for grading and fill elsewhere on the site.

Other Sediment Filtration Designs

If there is sufficient space and volume, a dewatering impoundment may be constructed with structurally sound berms and control structures. A common method of filtration can be achieved using a perforated or slit standpipe with holes wrapped in filter fabric. The standpipe is surrounded by rock or aggregate that filters the water as it collects in the standpipe before being pumped out or discharged.

If the standpipe is being pumped out, then wrapping the standpipe in filter fabric may require an increased suction inlet area to avoid clogging and unacceptable pump operation. Alternatively, a floating suction hose in the impoundment will allow clean surface water to be pumped out after allowing time for settlement, typically overnight.

Direct discharged effluent over a well-vegetated strip with a flow path of at least 50 feet after leaving the filter. The effluent discharge point may be relocated from time to time to other well-vegetated strips as needed.

Toxic Materials and Petroleum Products

- In areas suspected of having groundwater pollution, sample the groundwater near the excavation site and have the water tested for known or suspected pollutants at a certified laboratory. Check with TDEC for requirements for dewatering and water quality tests.

- It may be possible to treat pumped groundwater and discharge it to the municipal wastewater treatment plant via the sanitary sewer with written permission from the City of Memphis Sanitary Sewer Department. They must be consulted prior to considering the sanitary sewer as a disposal option.

Maintenance

- Inspect the filtering device frequently. Repair or replace the filtering device when sediment buildup prevents the structure from functioning as designed.

- Accumulated sediment removed from a dewatering device may generally be spread at the project site. Sediment that appears to be contaminated shall be stabilized and then disposed as hazardous waste at a licensed disposal site.

- Inspect excavated areas daily for signs of contaminated water as evidenced by discoloration, oily sheen, or odors. Notify TDEC and the City of Memphis and Shelby County Storm Water Programs concerning the evidence of contaminated water. Promptly sample and test groundwater to determine nature and extent of pollutants.

Limitations

- The controls discussed in this BMP address sediment only. If the presence of polluted water is identified in the contract, the contractor shall implement dewatering pollution controls as required by the contract documents. If the quality of water to be removed by dewatering is later determined by observation or testing to be polluted, the contractor shall notify the appropriate authorities.

References **30, 31, 33, 34, 35, 100, 137, 141** (see BMP Manual Chapter 10 for list)

NOTES:

1. Weld shall be designed for the capacity of the tank.

2. For bottom drum, remove top cover only. Remove top and bottom covers for top and middle drums.

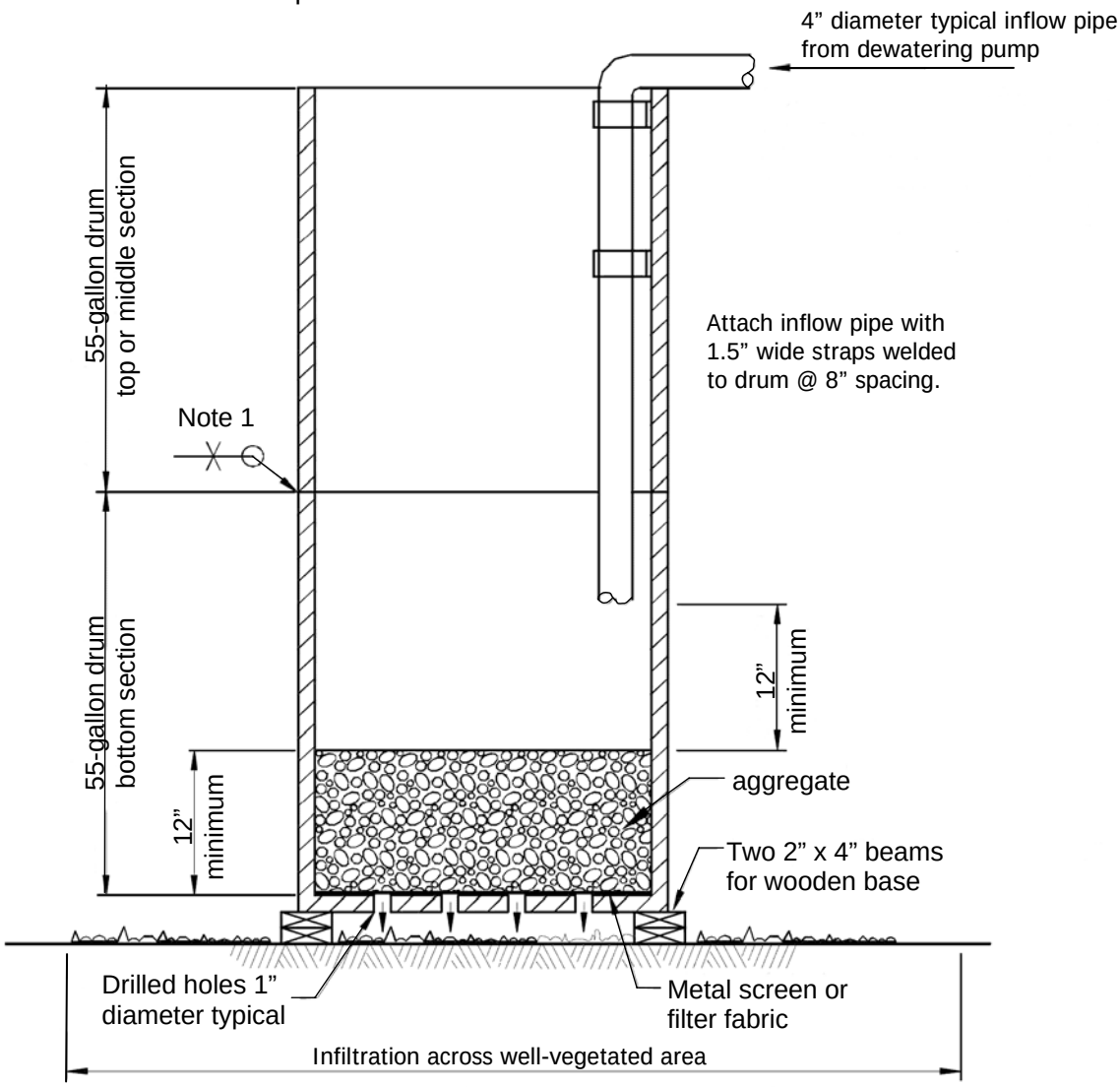

NOT TO SCALE

Figure AM-12-1
Typical Filter Box

NOTE:

1. Weld shall be structurally designed for the capacity of the tank and for transportation. Critical stress may occur during offloading and/or transportation.

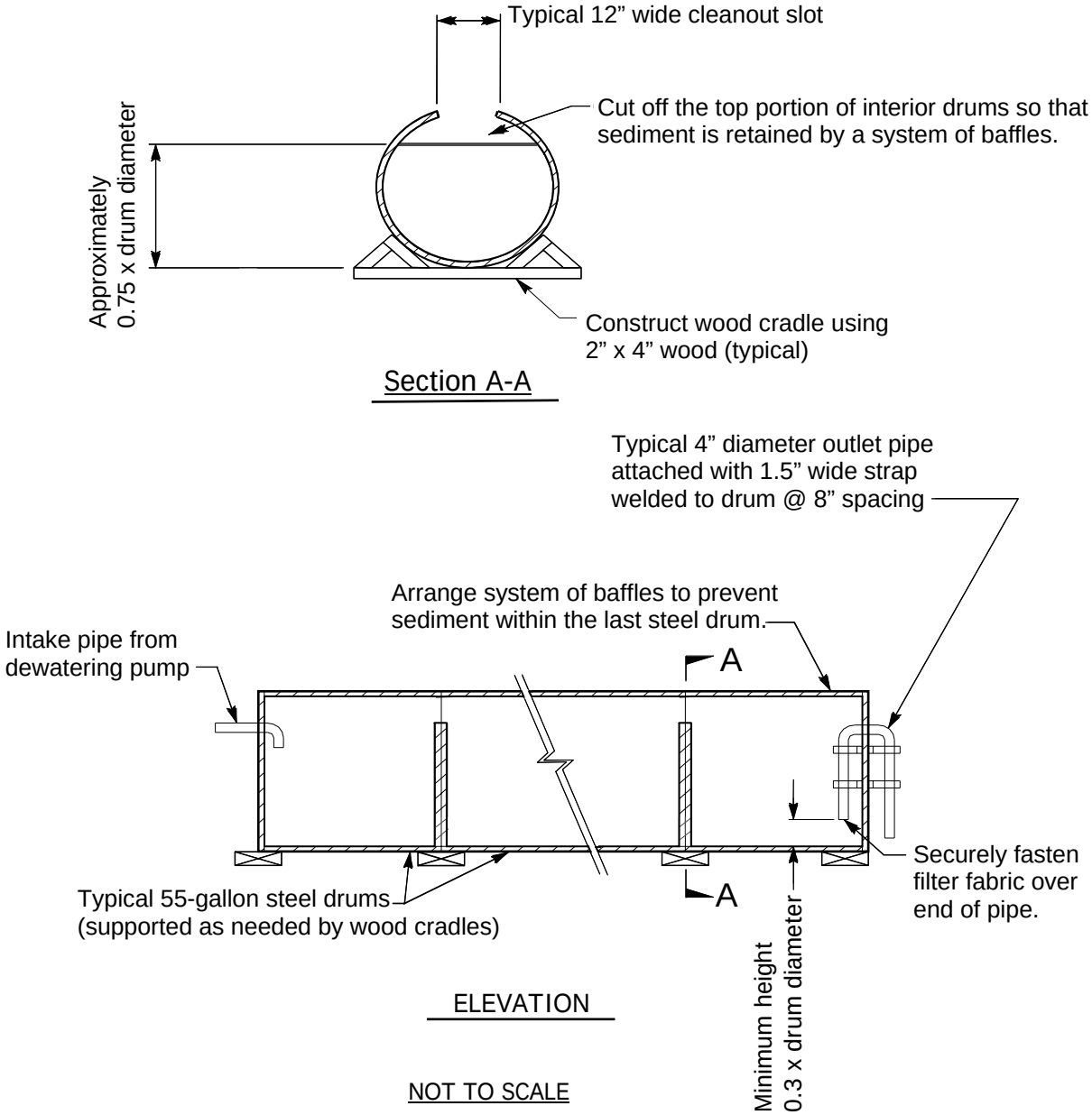

Figure AM-12-2
Typical Portable Sediment Tank

ACTIVITY: Pesticides, Herbicides, and Fertilizer Use	AM – 13

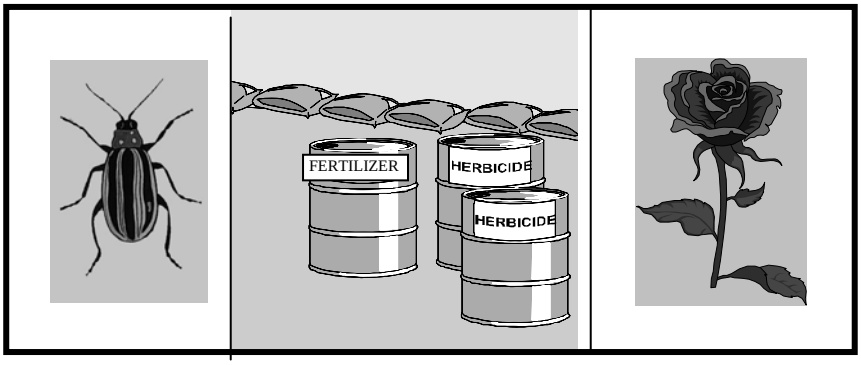

Targeted Constituents

● Significant Benefit ◗ Partial Benefit ○ Low or Unknown Benefit

○ Sediment	○ Heavy Metals	○ Floatable Materials	● Oxygen Demanding Substances	
● Nutrients	● Toxic Materials	○ Oil & Grease	○ Bacteria & Viruses	○ Construction Wastes

Description

Promote efficient and safe housekeeping practices (storage, use, and cleanup) when handling potentially harmful materials such as fertilizers, herbicides, and pesticides. This management practice will create a significant reduction in nutrients, toxic materials, and oxygen demanding substances.

Approach

Fertilizer management involves control of the rate, timing, and method of application to minimize the chance of polluting surface water or groundwater. Pesticide and herbicide management involves eliminating excessive pesticide use, employment of proper application procedures, and the use of alternatives to chemical control to reduce the pesticide and herbicide load in storm water runoff.

The use of fertilizers, herbicides, and pesticides contribute to the pollution of storm water runoff. All types of properties contribute to the problem: residential, commercial, industrial, institutional. Major users of these products, such as lawn care contractors or construction firms, should develop controls on the application of fertilizers, herbicides, and pesticides. Controls may include:

- Product and application information
- Equipment use and maintenance procedures
- Record keeping
- Public notice procedures

Carefully consider whether these products are essential. Selection of low-maintenance vegetation may reduce the need for fertilizers, pesticides, and herbicides. The Shelby County Extension Service has many brochures and pamphlets concerning fertilizers and pesticides, including various alternatives.

Fertilizers

- Avoid broadcast applications of fertilizers when immediate rainfall is expected. Apply fertilizer when there is already adequate soil moisture and little likelihood of immediate heavy rainfall, followed by sprinkling the lawn or garden. A soil test is recommended to assure the use of optimum lime and fertilizer application rates.

- Whenever fertilizer is used to establish vegetation on bare soil areas, erosion control is of primary importance in preventing fertilizer from leaving the site.

Pesticides and Herbicides

- Excessive application and misuse of pesticides and herbicides results in heavily polluted storm water runoff. Avoid broadcast applications of pesticides and herbicides when immediate rainfall is expected. Apply pesticides and herbicides in a narrow rather than wide band; do not broadcast them over the entire lawn area. Spot-spray infested areas rather than applying excess amounts of pesticides and herbicides. Never apply over impervious surfaces.

- Examine all alternatives to pesticides and herbicides that, in the long term, may be much less costly than the use of a particular chemical. Use the least toxic chemical pesticide and herbicide that will accomplish the purpose.

- Pesticides and herbicides that degrade rapidly are less likely to become storm water runoff pollutants. Use pesticides and herbicides with low water solubility. Granular formulations are generally preferable to liquids because application losses are lower.

- Pesticides and herbicides should be sprayed only when wind speeds are less than 7 miles per hour. Spray in the early morning or at dusk when wind speeds are usually lowest. Air temperature should range between 40 degrees to 80 degrees Fahrenheit.

Pesticide and Herbicide Types

- Dusts: This type is highly susceptible to wind drift, not only when being applied but also after reaching target. The application should be performed during the early morning or late evening hours when there is little or no air movement. The distance between the application equipment and the target must also be considered.

- Sprays: This type may be in the form of solutions, emulsions, or suspensions. Droplet size is an important factor in determining susceptibility to wind drift. Large droplets fall faster and are less likely to contaminate non-target areas. Sprays should be applied during periods of low air

movement. Ground sprays followed by soil incorporation are not likely to be sources of water pollution unless excessive erosion occurs.

- Granular formulations: This type is applied to either the ground surface or below the soil surface. Surface applications may or may not be followed by soil incorporation. Pollution of surface waters from granular formulations is unlikely unless heavy runoff or erosion occurs soon after treatment. However, groundwater pollution may result from excessive leaching due to rainfall after application, depending on the pesticide composition. Loss of granular formulations can be controlled for the most part with adequate soil conservation practices.

- Fumigants: This type must be kept in place for specific lengths of time in order to be effective. Containment methods include soil compaction, water seal, and sealing of the area with a plastic cover. Most fumigants act rapidly and degrade quickly. Consequently, water pollution is usually not a problem.

- Antimicrobial paints and other surface coatings: This type is designed to resist weathering and is therefore not a likely source of pollution. Empty containers should be disposed in accordance with rules for all pesticide containers. Use extreme care when sanding or scraping surfaces that have been previously treated with these substances. Treat sanded and scraped residue as hazardous waste.

- Pre-plant treatments: Seed, roots, tubers, etc., are frequently treated with pesticides prior to planting. Treatment is usually by dust, slurry, or liquids. Little pollution hazard exists from this application. Care must be taken, however, in disposing of residual treatment materials and with unused plants.

- Organic pesticides: A wide variety of organic pesticides, produced from plants, bacteria, and other naturally occurring substances, are available in quantities for both commercial and residential use. These substances usually present much less risk for contamination of groundwater and surface water, and much fewer problems for disposal of leftover product or containers.

- Beneficial insects: This management method involves the use of insects in bulk or in amounts suitable for residential use. It can be used alone or in combination with other pesticides to eliminate or minimize the use of toxic substances.

Good Housekeeping and Safety

- Always use caution when handling any pesticide, herbicide, or fertilizer product. Many products contain toxic chemicals that can cause severe injury or death.

- Store pesticide or fertilizer products securely in containers protected from storm water and away from children, pets, and sources of heat, sparks, and flames. Store products in their original containers and keep them well labeled. Very importantly, do not store chemicals in food containers.

- Read and follow use instructions provided on packaging and in material safety data sheets (MSDS). Periodically review MSDS information and discuss precautions with employees or personnel using or handling pesticides, herbicides, or fertilizers.

- Work only in well-ventilated areas. Avoid contact with eyes and skin. Wear gloves and eye protection when using or handling hazardous substances. Do not wear contact lenses, which can absorb hazardous vapors.

- Use the entire product before disposing the container. Do not dispose of pesticide or fertilizer wastes in any of the following methods:
  - Into trash or waste containers
  - Into storm drains or into creeks
  - Onto the ground
  - By burning

Requirements

- Employees who handle potentially harmful materials should be trained in good housekeeping practices. Consult Table AM-01-1, presented in the Employee Training BMP fact sheet, for a quick reference on disposal alternatives.

References

18, 32, 33, 34, 35, 52, 53, 92, 93, 96, 97, 166 (see BMP Manual Chapter 10 for list)

ACTIVITY: Vehicle and Equipment Cleaning | AM – 14

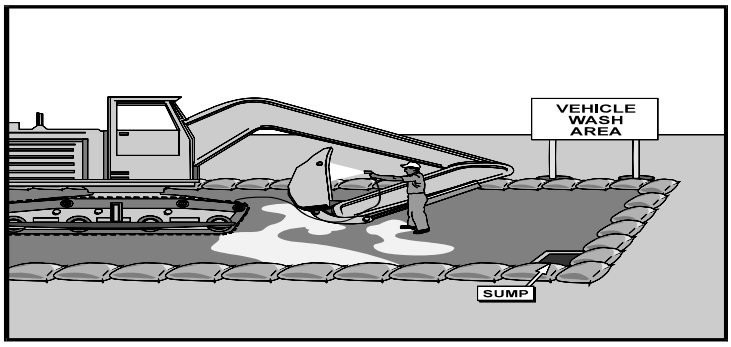

Targeted Constituents				
● Significant Benefit		◗ Partial Benefit	○ Low or Unknown Benefit	
◗ Sediment	◗ Heavy Metals	○ Floatable Materials	◗ Oxygen Demanding Substances	
◗ Nutrients	◗ Toxic Materials	◗ Oil & Grease	○ Bacteria & Viruses	○ Construction Wastes

Description

Prevent or reduce the discharge of pollutants to storm water from vehicle and equipment cleaning by using offsite facilities, washing in designated areas only, eliminating discharges to the storm drain by infiltrating or recycling the wash water, and training employees and subcontractors. This management practice is likely to cause a significant reduction in oil, grease, and nutrients. It will cause a partial reduction in heavy metals, toxic materials, sediment, nutrients, and oxygen demanding substances.

Approach

Many businesses, industries, and commercial facilities need to clean and wash vehicles on a regular basis. Vehicles on construction sites may need to be washed frequently. Washing vehicles and equipment outdoors can pollute storm water runoff, particularly when performed on paved surfaces or in drainage pathways. The wash water may flow onto the ground or enter directly into the storm drainage system or natural channel.

Pollution may be generated by the vehicle being washed (sediment, automotive fluids, dust, food particles, toxic materials, etc.), or by the cleaning method involved (detergents, solvents, disinfectants, etc.) Due to the wide range of potential pollutants, there is no single solution for how to clean vehicles and equipment.

It is necessary to detain vehicle wash water until it is determined that no pollutants exist other than sediment. Small amounts of wash water may be discharged into vegetated areas for infiltration and use by plants (except for environmentally sensitive areas such as natural streams and wetlands), provided that all of the wash water infiltrates into the ground.

General Guidelines

Consider the following methods for washing and cleaning vehicles and equipment:

- Use offsite commercial washing businesses as much as possible, except for removing mud and dirt prior to leaving the site. Offsite commercial businesses must be permitted and are usually better equipped to handle and dispose of wash water properly. Performing this work offsite can also be economical by eliminating the need for substantial space and washing equipment.

- If washing must occur onsite, use designated and bermed wash areas to prevent wash water from entering storm water infrastructure, creeks, rivers, and other water bodies. The wash area should be sloped for wash water collection into a sump with adequate capacity.

- Use phosphate-free, biodegradable soaps in small amounts. Avoid the use of solvents to clean vehicles.

- Educate employees and subcontractors about the importance of this practice on pollution prevention measures.

- Steam cleaning and pressure washing are two procedures that generate significant pollutant concentrations. Do not allow these practices unless wash water containment and capture methods are in place. Wash water generated by steam cleaning and pressure washing shall not be discharged but must be disposed to the municipal wastewater treatment plant via the sanitary sewer with written permission from the City of Memphis Sanitary Sewer Department. The department must be consulted prior to considering the sanitary sewer as a disposal option.

- When cleaning vehicles and equipment, use as little water as possible. Initially spray vehicle or equipment, and then scrub with cloth rags or squeegees. Use a positive shutoff valve to minimize water usage. High-pressure sprayers may use less water than a hose.

See RH-02 for information on residential cleaning and car wash fund-raiser.

Temporary Facility for Vehicle and Equipment Cleaning

- A typical temporary installation for construction vehicle and equipment cleaning is shown in Figure AM-14-1.

- A temporary setup may also be used for industrial and commercial facilities. Similarities include the need for an impervious floor, containment berms of a minimum height, and a controlled entrance and exit. Commercial vendors make several configurations for different

size vehicles (even railcars) over a variety of ground surfaces. Typically, some type of plastic abrasion-resistant sheeting is used. Sheeting should be inert to anticipated types of chemicals and also resistant to weathering. Containment berms can be formed from cinder blocks, telephone poles, or other material beneath the sheeting. It is highly recommended that a water treatment system should be included for a temporary setup at industrial and commercial facilities.

- When vehicle and equipment cleaning must occur onsite, and the operation cannot be located within a structure or building equipped with sanitary sewer facilities, the outside cleaning area shall have the following characteristics:

  - Located away from storm drainage system or water courses
  - Have an impervious floor that is resistant to traffic, chemicals, weathering
  - Have a containment berm at least 6 inches high, preferably more
  - Sloped to a sump to allow collection and disposal of wash water

Permanent Facility for Vehicle and Equipment Cleaning

- Large businesses and industries may consider a complete vehicle washing facility that filters and recycles wash water.

- When vehicle and equipment cleaning must occur onsite, and the operation cannot be located within a structure or building equipped with sanitary sewer facilities, the outside cleaning area shall have the following characteristics:

  - Located away from storm drainage system or water courses
  - Paved with concrete or asphalt, or stabilized with aggregate base
  - Have a sump to allow collection and disposal of wash water
  - Have a berm to contain wash water and to prevent storm water runoff
  - Have a discharge pipe with a positive control valve that allows switching from storm water runoff (when not in use) to a sanitary sewer or process sewer or a separate dead-end sump (during vehicle cleaning)
  - Be clearly designated as a vehicle and equipment cleaning area to prevent other uses such as vehicle maintenance and repair
  - Be equipped with media infiltration devices (see ST-06) or oil-water separators (see ST-07).

- Must have written procedures for how to operate a permanent facility for vehicle and equipment cleaning. Employees must be trained on these procedures. Important information should be posted at the facility, such as proper settings for the discharge pipe control valve.

Maintenance

- Install and inspect system prior to use. Repair as necessary. Inspect sump and wash water treatment equipment regularly and empty as needed.

Limitations

- Even phosphate-free, biodegradable soaps have been shown to be toxic to fish before the soap degrades.
- Sending vehicles and equipment offsite to be cleaned should be done in conjunction with a stabilized construction entrance and mud tracking removal.
- The City of Memphis Sanitary Sewer Department may require pretreatment and monitoring of wash water discharges into the sanitary sewer and should be consulted first.

References

30, 31, 33, 34, 35, 98, 99, 103, 113, 138 (see BMP Manual Chapter 10 for list)

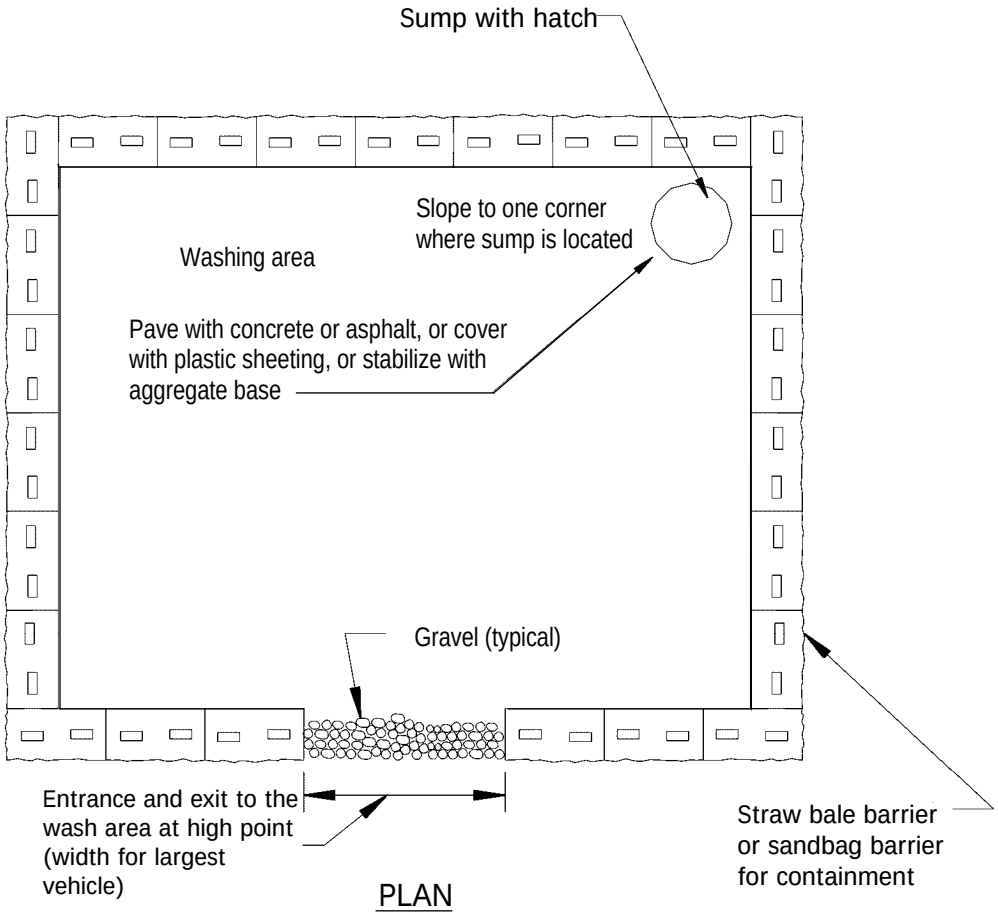

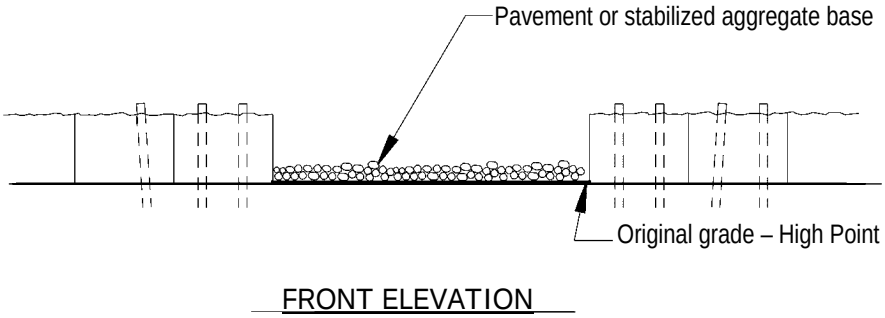

Figure AM-14-1
Construction Vehicle and Equipment Cleaning Area

ACTIVITY: Vehicle and Equipment Fueling	AM – 15

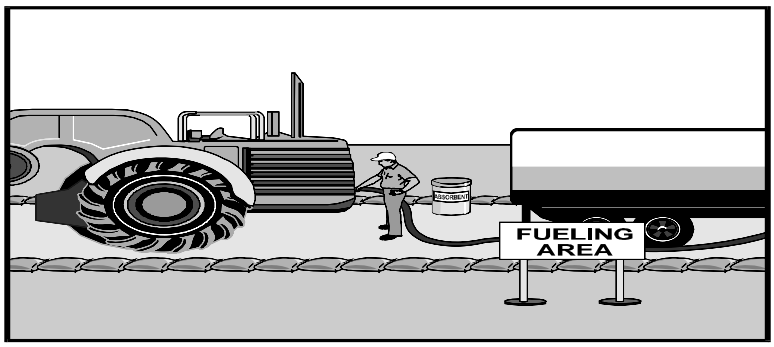

Targeted Constituents				
● Significant Benefit		◗ Partial Benefit	○ Low or Unknown Benefit	
○ Sediment	● Heavy Metals	○ Floatable Materials	○ Oxygen Demanding Substances	
○ Nutrients	● Toxic Materials	● Oil & Grease	○ Bacteria & Viruses	○ Construction Wastes

Description

The purpose of this BMP is to reduce or prevent the impact of fueling operations to the storm water system and natural streams. A combination of proper structural controls, alert and trained employees, good habits, and adequate supply of spill response materials will prevent environmental impacts to streams and natural channels. Such practices will create a significant reduction in volatile organic compounds, heavy metals, toxic materials, and oil and grease. Even a small amount of spilled gasoline, oil, or other petroleum product will kill fish and other aquatic wildlife in ditches, streams, wetlands, or other natural bodies of water.

Suitable Applications

- Temporary fueling facilities at construction sites, such as fuel trucks and diesel tanks.
- Permanent fueling facilities, such as retail gasoline stations or private refueling stations on industrial or commercial property.

Approach

Spills from fueling vehicles and equipment or from the transfer of fuels to a storage tank can be a significant source of pollution. Fuels carry contaminants of particular concern to humans and wildlife, such as heavy metals, toxic materials, and oil and grease; these contaminants are not easily removed by most storm water treatment devices. In addition, many people do not realize that storm drains, curb inlets, grate inlets, and drainage culverts discharge directly into natural streams, rivers, and lakes.

Consequently, pollution control at the source is particularly important. Adequate control can be achieved with careful design of the initial installation, retrofitting of existing installations, and proper spill control and cleanup procedures described below.

General Guidelines

- Maintain fueling equipment in good condition. Comply with all federal and state requirements regarding the installation of aboveground and underground storage tanks, including requirements for secondary containment.

- A Spill Prevention Control and Countermeasure (SPCC) Plan is required by Title 40 of the Code of Federal Regulations Part 112 (40 CFR 112) for facilities with oil storage over 1,320 gallons in containers of 55 gallons and above. Keep the SPCC Plan up to date by regular inventory of oil storage containers, cleanup equipment, and cleanup supplies.

- Train employees in proper fueling and cleanup procedures, including periodic review of the SPCC Plan and locations of absorbent spill materials. Use absorbent materials on small spills rather than hosing down the spill; remove absorbent materials promptly and dispose properly. Maintain an adequate supply of clean absorbent materials in an easily accessible location per SPCC Plan.

- Discourage "topping-off" of fuel tanks. Use vapor recovery nozzles to help control drips as well as prevent air pollution. The vehicle operator should remain with the vehicle during fuel operations.

- When filling storage tanks, the fuel delivery truck operator must remain with the vehicle during fuel transfer operations. Place secondary containment around potential locations of accidental spills or releases, such as at the hose connections or valves. Temporarily cover or otherwise block nearby catch basins or storm drains so that a spill or leak will be controlled. Always notify emergency responders, hazmat contractors and Memphis and Shelby County Storm Water Programs immediately in the event of a large spill or leak. (See Table AM-07-1 for phone numbers)

- Although not specifically involved with storm water quality, a fire or explosion would constitute a potential storm water quality disaster. Follow recommendations and requirements by the National Fire Protection Association (NFPA) including:

  - NFPA 30, Flammable and Combustible Liquids Code
  - NFPA 30A, Automotive and Marine Service Station Code

Temporary Facility for Fueling (*Construction Activities)*

- Prior to establishing a temporary facility or using a portable fuel truck, consider using offsite fueling stations as much as possible. Retail gasoline stations must be permitted, are usually better equipped to

fuel vehicles and equipment, and generally have oil-water separators and other structural controls to protect the environment.

- Do not use mobile fueling of vehicles and equipment when it is feasible to transport to a designated temporary fueling area. Plan work so that vehicles and equipment can be fueled at the beginning or end of a shift. Establish a designated area for fueling with adequate room for spill control, which is not in the center of activity. Most vehicles, except for tracked equipment such as bulldozers, should be able to travel to a designated area with little lost time.

- Place a stockpile of spill cleanup materials where it will be readily accessible. Use absorbent materials on small spills and for general cleaning rather than hosing down the area. Remove the absorbent materials promptly and dispose properly.

Permanent Facility for Fueling
(*Retail Gasoline Stations or Private Fuel Pumps)*

- Design the fueling area to prevent spills and leaks and to prevent storm water runoff in the immediate fueling area. Cover fueling area if possible. Prevent storm water runoff from flowing into area by proper grading and contours.

- Route all storm water runoff from fueling areas to an oil-water separator. For permanent fueling areas, generally use a coalescent plate oil-water separator as shown in ST-07. Minimize the amount of clean storm water runoff that drains to an oil-water separator by efficient design of project site.

- Control storm water runoff by using a perimeter trench drain or by sloping pavement inward to drain to a sump. Curbs, berms, swales, or speed bumps can be used to prevent storm water runoff from leaving the fueling area or to contain possible leaks and spills. See Figure AM-15-1 for a typical design layout for a retail gasoline station.

- Pave fueling area with Portland cement concrete rather than asphalt, which can be damaged by gasoline and other petroleum products. Apply suitable sealants to asphalt when necessary, including at joints and along fueling islands.

- If fueling occurs infrequently (such as at private fuel pumps), the storm drain can be fitted with a valve to accept or reject runoff from fueling areas. Do not discharge any spills, leaks, wash water or rinse water to the storm drain. Verify that any storm water runoff from the fueling area does not have a sheen or odor.

- Use dry methods to clean the fueling area whenever possible. If the fueling area is periodically cleaned by water (such as power washing or steam cleaning), place a temporary plug on top of or within downstream drain and pump out accumulated wash water. Typical plugs may include reusable water-filled dikes or water-filled storm inlet covers, which tend to conform to the surface and provide a good seal.

- Properly dispose of any wash water or rinse water, including such water used for power washing and for steam cleaning. Consult with the City of Memphis Sanitary Sewer Department prior to considering sanitary sewer as disposal option. Written permission must be obtained from the department before discharging into the sanitary sewer system.

Maintenance

- Clean and empty oil-water separators at the appropriate intervals as recommended by the manufacturer. Inspect oil-water separators at least monthly.

- Keep ample supplies of spill cleanup materials nearby. Dispose of used cleanup materials in an environmentally safe manner.

- Inspect fueling areas and storage tanks on a daily basis. Maintain good records concerning fuel storage volumes, fuel usage, fuel delivery schedules, etc. Special attention should be given to detecting leaks from any underground storage tanks.

Limitations

- Oil-water separators are essential in the effort to contain fuel, oil, and grease. However, oil-water separators must be properly sized and installed to function effectively, and they must be maintained and cleaned on a regular basis. See guidelines in ST-07 for additional information.

- The retrofitting of existing fueling areas to minimize storm water exposure or spill runoff can be expensive. It is preferable to incorporate good design during the initial installation and construction.

- Installing extruded curb uphill from the fueling area is a modest cost and will greatly reduce the volume of storm water runoff that encroaches upon the fueling area.

References **30, 31, 33, 34, 35, 98, 99, 103, 138** (see BMP Manual Chapter 10 for list)

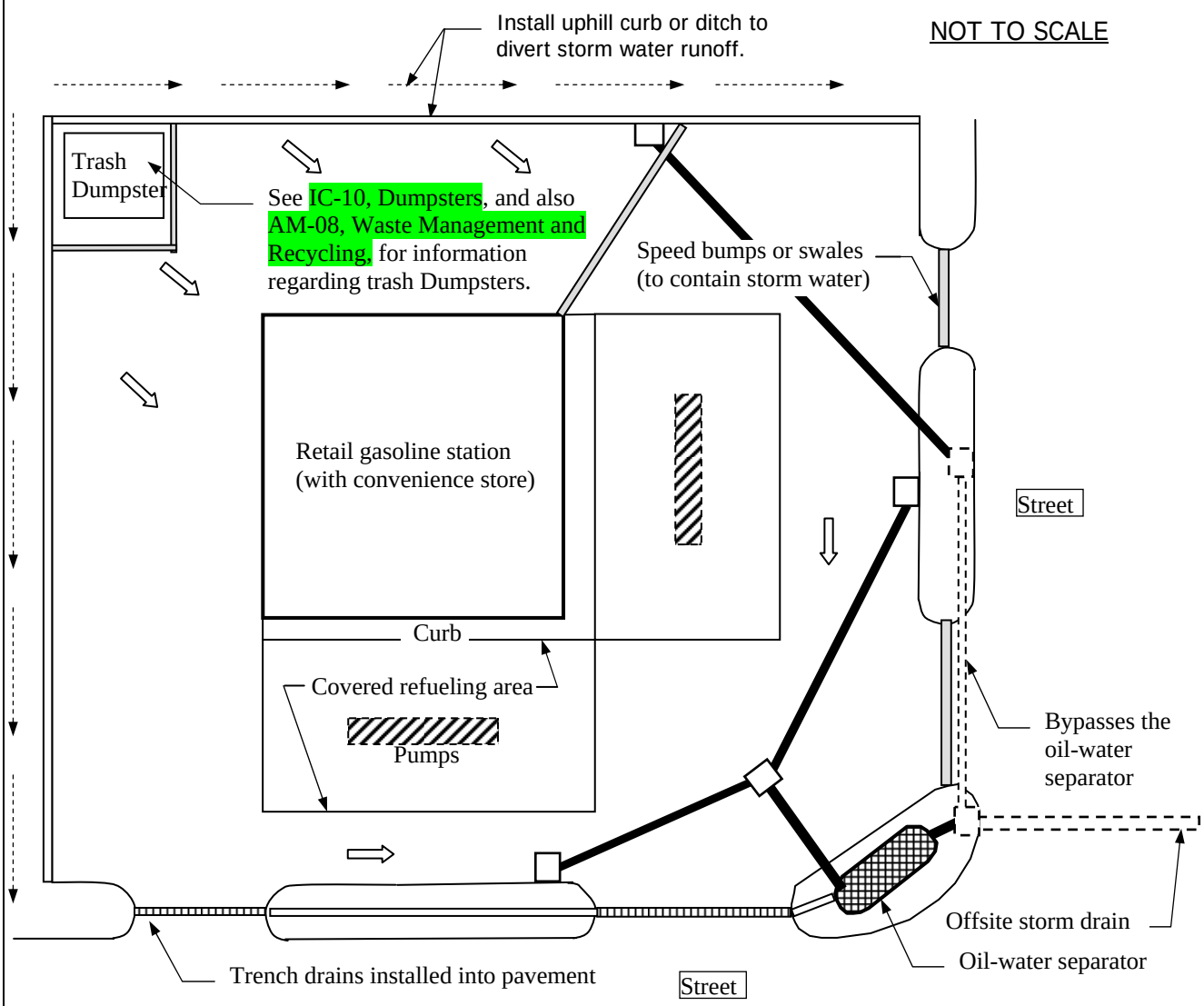

Notes:

1. This typical layout (at the intersection of two streets) only shows a typical design layout for a retail gas station and is meant to illustrate the following points:
   - Need an oil-water separator (see ST-07, Oil-Water Separator)
   - Segregate clean offsite water
   - Control areas with potential leaks or spills (see AM-07, Spill Prevention and Control)
   - Control areas that may be pressure washed or steam cleaned (see IC-08, Power or Pressure Washing)
2. Roof drains should also generally bypass the oil-water separator. This layout does not provide any required detention for storm water. Designed facilities must contain structural measures rather than solely relying on personnel to implement necessary BMP procedures.

Figure AM-15-1
Typical Layout — Retail Gasoline Stations

ACTIVITY: Vehicle and Equipment Maintenance and Repair	AM – 16

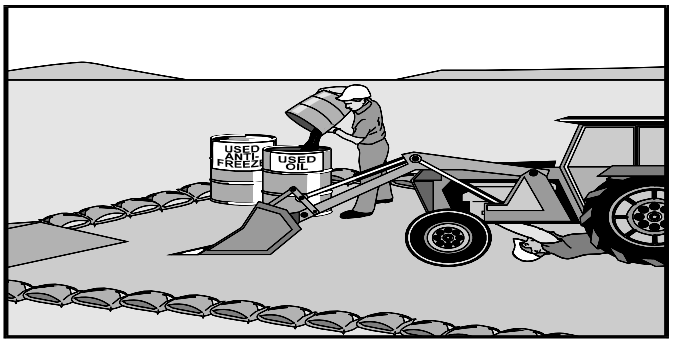

Targeted Constituents				
● Significant Benefit		◗ Partial Benefit	○ Low or Unknown Benefit	
○ Sediment	● Heavy Metals	○ Floatable Materials	○ Oxygen Demanding Substances	
○ Nutrients	● Toxic Materials	● Oil & Grease	○ Bacteria & Viruses	○ Construction Wastes

Description

Procedures and practices to reduce the discharge of pollutants to the storm drain system or to watercourses as a result of vehicle and equipment maintenance by conducting these activities offsite or in a designated area designed to contain spills and prevent storm water runoff. This management practice is likely to create a significant reduction in heavy metals, toxic materials, and oil and grease.

Approach

Vehicle or equipment maintenance is a potentially significant source of storm water pollution. Activities that can contaminate storm water include engine repair and service (parts cleaning, spilled fuel or oil), replacement of fluids, and outdoor equipment storage and parking (dripping engines).

Maintain vehicles and equipment using indoor facilities protected from storm water. If this is not possible, then use offsite repair shops that are protected from storm water. As a last resort, vehicle maintenance may be conducted outdoors if spill and leak prevention practices are followed.

General Guidelines

- A Spill Prevention Control and Countermeasure (SPCC) Plan, Title 40 of the Code of Federal Regulations Part 112, is required for facilities with 1,320 gallons of oil storage in containers 55 gallons and above. Keep the SPCC Plan up to date by regular inventory of oil storage containers, cleanup equipment, and supplies.

- Train employees to carefully handle chemicals and liquids to avoid spills and leaks, including periodic review of the SPCC Plan. For a quick reference on disposal alternatives for specific wastes, see Table AM-01-1 in the Employee Training BMP fact sheet.

- An outdoor maintenance area, if needed, should be located on paved surfaces, preferably concrete, in order to facilitate cleanup. Use a barrier made of sandbags, blocks, or other material to prevent storm water runoff from entering the area.

- Always use secondary containment, such as a drain pan or drop cloth, to catch spills or leaks when removing or changing fluids. Keep a drip pan under the vehicle when unclipping hoses, unscrewing filters, or removing other parts.

- Place a stockpile of spill cleanup materials where it will be readily accessible. Inform all employees where the materials are located and when they should be used.

- Clean leaks, drips, and other spills with as little water as possible. Use rags for small spills, a damp mop for general cleanup, and dry absorbent material for larger spills. Use the following three-step method for cleaning floors:

  1. Clean spills with rags or other absorbent materials.
  2. Sweep floor using dry absorbent material.
  3. Mop floor. Mop water may be discharged to sanitary sewer via a toilet or sink.

Call Memphis or Shelby County Storm Water Hotlines if a violation is suspected.
City: 576-6721
County: 545-3870

- Infrequent steam cleaning or pressure washing may be appropriate if conducted by a licensed company that recycles and/or treats the wash water prior to discharge. Verify that no wash water is discharged during the cleaning process.

- Provide spill containment dikes or secondary containment (curbs, berms, walls) around stored oil and chemical drums.

- Paint messages on storm drain inlets to indicate that they are not to receive liquid or solid wastes. Post signs as necessary to prevent disposal of liquid or solid wastes into natural channels or the storm water drainage system.

- Inspect and clean nearby storm water inlets regularly and especially after large storms.

Vehicle and Equipment Maintenance

- Routinely inspect vehicles and equipment for damaged hoses and leaky gaskets . Repair or replace immediately to prevent fluids and oil from leaking.

- Keep equipment clean. Do not allow excessive buildup of oil and grease on equipment surfaces and engines. Make sure that incoming vehicles are checked for leaking oil and fluids.

- Keep drip pans or containers under the areas that might drip. Use several drip pans to collect different fluids, which can then be recycled if kept separate.

- Do not change motor oil or perform equipment maintenance near storm drains or storm water channels. Use a vehicle maintenance area designed to prevent storm water pollution.

- Inspect stored equipment for leaks on a regular basis. Keep drip pans or containers under areas that might drip. Consider storing vehicles and equipment indoors. Long-term storage should include draining oil and other fluids.

- Be especially careful with wrecked vehicles as well as vehicles kept onsite for scrap or salvage. Wrecked or damaged vehicles often drip oil and other fluids for several days.

- Place drip pans under a wrecked car immediately, even if all of the fluids appear to have leaked out beforehand.

- Build a shed or roof over areas with wrecked or stored vehicles awaiting repair or salvage.

- Drain all fluids, including air conditioner coolant, from wrecked vehicles and vehicles to be salvaged.

Material Disposal and Recycling

- Do not dump fuels and lubricants onto the ground. Do not place used oil or fluids into a Dumpster. Recycle used oil and antifreeze at automotive retail stores.

- Do not bury used tires. Recycle tires at approved recycling centers or commercial establishments that accept tires.

- Store cracked batteries in a non-leaking secondary container. Do this with all cracked batteries, even if the acid appears to already be drained out. If a battery is dropped, treat it as if it were cracked by placing it into a container.

- Collect leaking or dripping fluids in fluid-specific drip pans or containers. Fluids are easier to recycle if kept separate.

- Promptly transfer used fluids to the proper waste or recycling drums. Do not leave full drip pans or other open containers lying around.

- Segregate liquid, solid, and hazardous wastes for easier recycling and reduced treatment costs. Recycle greases, used oil or oil filters, antifreeze, cleaning solutions, automotive batteries, hydraulic, and transmission fluids. Keep hazardous and non-hazardous wastes separate.

- Do not mix used oil and solvents. Keep all types of chlorinated solvents (such as 1,1,1-trichloroethane) separate from non-chlorinated solvents (like kerosene and mineral spirits).

- Many automotive products made of recycled (i.e., refined or purified) materials are available. Engine oil, transmission fluid, antifreeze, and hydraulic fluid are available in recycled form. Buying recycled products supports the market for recycled materials.

- If possible, eliminate or reduce the amount of hazardous materials and waste by substituting nonhazardous or less hazardous materials. For example:

  - Use noncaustic detergents instead of caustic cleaning agents for parts cleaning (ask automotive suppliers about alternative cleaning agents).
  - Use detergent-based or water-based cleaning systems in place of organic solvent degreasers.
  - Replace chlorinated organic solvents (1,1,1-trichloroethane, methylene chloride, etc.), with nonchlorinated solvents. Nonchlorinated solvents like kerosene or mineral spirits are less toxic and less expensive to dispose properly. Check list of active ingredients to see whether it contains chlorinated solvents. The term “chlor” indicates that the solvent is probably chlorinated.

- Parts are often cleaned using hazardous solvents such as trichloroethylene, 1,1,1-trichloroethane or methylene chloride. Many of these cleaners must be disposed of as a hazardous waste. Clean without using liquid cleaners (such as using a wire brush) whenever possible to reduce waste.

- Do all liquid cleaning at a centralized station so that solvents and residues stay in one area. Locate drip pans, drain boards, and drying racks to direct drips back into a solvent sink or fluid holding tank for re-use.

- Oil filters, when disposed into trash cans or Dumpsters, can leak oil and contaminate storm water. Place the oil filter in a funnel over the

waste oil recycling collection tank to drain excess oil before disposal. Oil filters can be crushed and recycled; ask automotive suppliers about recycling used oil filters.

Maintenance

- Maintain waste fluid containers in leak-proof condition. Recycle waste fluids on a regular basis before container capacity is reached.
- Vehicle and equipment maintenance areas shall be inspected regularly. A safe and organized work area will prevent most spills and leaks.
- Keep ample supplies of spill cleanup materials available.

Limitations

- Space and time limitations may preclude all work being conducted indoors in a controlled automotive shop.
- Some drain pans are generally too small to contain antifreeze, which may gush from some vehicles. Keep several sizes of drain pans available; use the right size for each fluid.

References

19, 20, 22, 30, 31, 33, 34, 35, 43, 98, 99, 100, 108, 127, 138 (see BMP Manual Chapter 10 for list)

ACTIVITY: Paving and Grinding Operations	AM – 17

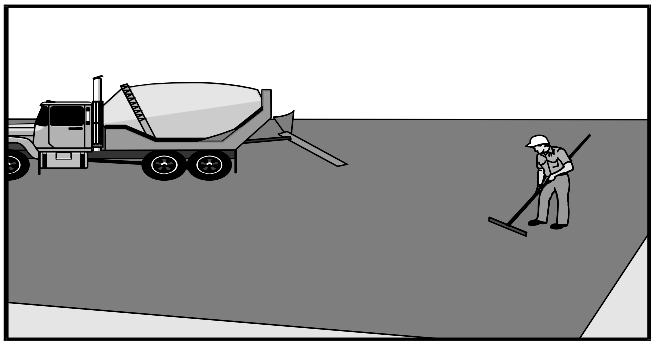

Targeted Constituents

● Significant Benefit ◗ Partial Benefit ○ Low or Unknown Benefit

◗ Sediment	◗ Heavy Metals	○ Floatable Materials	○ Oxygen Demanding Substances	
○ Nutrients	◗ Toxic Materials	◗ Oil & Grease	○ Bacteria & Viruses	○ Construction Wastes

Description

Prevent or reduce the discharge of pollutants from paving operations by using measures to prevent storm water run-on and runoff pollution, properly disposing of wastes, and the training of employees and subcontractors. This management practice is likely to create a partial reduction in sediment, heavy metals, toxic materials, and oil and grease.

These procedures are implemented where paving, surfacing, resurfacing, or saw cutting, may pollute storm water runoff or discharge to the storm drain system or watercourses. Finer solids are not effectively removed by filtration systems. Paving opportunities may be limited during wet weather. Avoid paving during the wet season when feasible. Reschedule paving and grinding activities if rain is in the forecast. Train employees and sub-contractors in pollution prevention and reduction. Store materials away from drainage courses to prevent storm water run-on. Protect drainage courses, particularly in areas with a grade, by employing BMPs to divert runoff or to trap and filter sediment. If paving involves an onsite mixing plant, follow the storm water permitting requirements for industrial activities. Stockpile material should be removed from roadways away from drain inlets, drainage ditches, and watercourses.

Approach

- Do not pave or apply sealants during wet weather. Carefully monitor weather conditions throughout the day so that equipment and materials will not be exposed to rainfall or storm water runoff.

- Protect open storm water channels by employing BMPs to divert runoff and to trap/filter sediment. Typical BMPs include silt fence, straw bale barriers, and grass swales. Train employees and subcontractors about the importance of these practices.

- Leaks and spills from paving equipment can contain very toxic levels of heavy metals and oil and grease. Maintain equipment in good order

without leaking fluids and oil. Place drip pans and absorbent materials under paving equipment when not in use.

- Cover catch basins and manholes when applying seal coat, tack coat, slurry seal, and fog seal. Cover catch basins and manholes during asphalt and concrete placement operations to avoid spilling material into storm drain inlets. Be careful when grading or paving near catch basins and manholes. Repair damaged storm drainage inlets immediately.

- Do not allow sand or gravel to wash into storm drains, streets, or creeks. Pay attention to street sweeping operations.

- If paving involves asphaltic concrete, follow these steps:

  - Old asphalt must be disposed of properly. Collect and remove all broken asphalt from the site and recycle whenever possible.
  - If paving involves an onsite asphalt mixing plant, follow the storm water permitting requirements for industrial activities.

- If paving involves Portland cement concrete, follow these additional steps:

  - Saw cut joints may be necessary. Shovel or vacuum sawcut slurry and dispose properly by removing from site. Cover or barricade storm drains during sawcutting in order to contain slurry. Concrete slurry may then be filtered using silt fence fabric or other types of dewatering products in order prevent concrete dust and sediment from washing into storm drains.
  - Concrete strikeoff and finishing may produce wasted concrete materials. Collect and dispose properly in accordance with AM-18.
  - If paving involves an onsite Portland cement concrete mixing plant, follow the storm water permitting requirements for industrial activities.

- Follow the recommendations in AM-18, Concrete Waste Management, for asphalt concrete and Portland cement concrete paving operations.

Saw Cutting, Grinding, and Pavement Removal

Shovel or vacuum saw-cut slurry and remove from site. Cover or barricade storm drains during saw cutting to contain slurry. When paving involves AC, the following steps should be implemented to prevent the discharge of grinding residue, uncompacted or loose AC, tack coats, equipment cleaners, or unrelated paving materials:

- AC grindings, pieces, or chunks used in embankments or shoulder backing must not be allowed to enter any storm drains or watercourses. Install silt fence until structure is stabilized or permanent controls are in place.
- Collect and remove all broken asphalt and recycle when practical. Old or spilled asphalt must be recycled or disposed.
- Any AC chunks and pieces used in embankments must be placed above the water table and covered by at least 1 ft of material.

Do not allow saw-cut slurry to enter storm drains or watercourses. Residue from grinding operations should be picked up by means of a vacuum attachment to the grinding machine, should not be allowed to flow across the pavement, and should not be left on the surface of the pavement. See also AM-18, Concrete Waste Management.

Dig out activities should not be conducted in the rain. Collect dig out material by mechanical or manual methods. This material may be recycled for use as shoulder backing or base material. If dig out material cannot be recycled, transport the material back to an approved storage site.

Asphaltic Concrete Paving

If paving involves asphaltic cement concrete, follow these steps:

- Do not allow sand or gravel placed over new asphalt to wash into storm drains, streets, or creeks. Vacuum or sweep loose sand and gravel and properly dispose of this waste.
- Old asphalt must be disposed of properly. Collect and remove all broken asphalt from the site and recycle whenever possible.

Portland Cement Concrete Paving

Do not wash sweepings from exposed aggregate concrete into a storm drain system. Collect and return to aggregate base stockpile or dispose of properly. Allow aggregate rinse to settle. Then, either allow rinse water to dry in a temporary pit as described in AM-18, Concrete Waste Management, or pump the water to the sanitary sewer if allowed by the local wastewater authority.

Sealing Operations

During chip seal application and sweeping operations, petroleum or petroleum covered aggregate must not be allowed to enter any storm drain or water courses. Apply temporary perimeter controls until structure is stabilized. Drainage inlet structures and manholes should be covered with filter fabric during application of seal coat, tack coat, slurry seal, and fog seal. Seal coat, tack coat, slurry seal, or fog seal should not be applied if rainfall is predicted to occur during the application or curing period.

Paving Equipment

Leaks and spills from paving equipment can contain toxic levels of heavy metals and oil and grease. Place drip pans or absorbent materials under paving equipment when not in use. Clean up spills with absorbent materials rather than burying.

Substances used to coat asphalt transport trucks, and asphalt spreading equipment should not contain soap and should be non-foaming and non-toxic. Use only non-toxic substances to coat asphalt transport trucks and asphalt spreading equipment. Paving equipment parked onsite should be parked over plastic to prevent soil contamination. Clean asphalt coated equipment offsite whenever possible. When cleaning dry, hardened asphalt from equipment, manage hardened asphalt debris as described in AM-08, Waste Management and Recycling. Any cleaning onsite should follow AM-14, Vehicle and Equipment Cleaning.

Thermoplastic Striping

Thermoplastic striper and pre-heater equipment shutoff valves should be inspected to ensure that they are working properly to prevent leaking thermoplastic from entering drain inlets, the storm water drainage system, or watercourses. Pre-heaters should be filled carefully to prevent splashing or spilling of hot thermoplastic. Leave six inches of space at the top of the pre-heater container when filling thermoplastic to allow room for material to move when the vehicle is deadheaded. Do not pre-heat, transfer, or load thermoplastic near drain inlets or watercourses. Clean truck beds daily of loose debris and melted thermoplastic. When possible, recycle thermoplastic material.

Raised/Recessed Pavement Marker Application and Removal

Do not transfer or load bituminous material near drain inlets, the storm water drainage system, or watercourses. Melting tanks should be loaded with care and not filled to beyond six inches from the top to leave room for splashing when vehicle is deadheaded. When servicing or filling melting tanks, ensure all pressure is released before removing lids to avoid spills.

On large-scale projects, use mechanical or manual methods to collect excess bituminous material from the roadway after removal of markers.

Maintenance

- Inspect and verify that activity-based BMPs are in place prior to the commencement of associated activities. While activities associated with the BMP are under way, inspect weekly during the rainy season and at two-week intervals in the non-rainy season to verify continued BMP implementation. Keep ample supplies of drip pans or absorbent materials onsite. Inspect and maintain machinery regularly to minimize leaks and drips.

- Inspect and maintain machinery regularly to minimize leaks and drips. Keep ample supplies of drip pans or absorbent materials onsite.

- Maintain inlet protection so that water is not allowed to back up onto areas subject to traffic. If water begins to back up and flood areas subject to traffic, the protective device must be removed and alternative measures deployed. Repair and clean inlet protection measures as needed.

References **30, 31, 33, 34, 35, 100, 122, 203** (see BMP Manual Chapter 10 for list)

ACTIVITY: Concrete Waste Management	AM – 18

Targeted Constituents				
● Significant Benefit		◗ Partial Benefit	○ Low or Unknown Benefit	
○ Sediment	○ Heavy Metals	○ Floatable Materials	○ Oxygen Demanding Substances	
○ Nutrients	◗ Toxic Materials	◗ Oil & Grease	○ Bacteria & Viruses	◗ Construction Wastes

Description Prevent or reduce the discharge of pollutants to storm water systems and natural streams from concrete waste by conducting truck and equipment washout offsite or in a designated area.

Approach Portland cement concrete is a very common building material used in road and street construction, drainage structures, retaining walls, footings and foundations, building construction, and many other applications. Asphalt concrete is a common building material for road and street construction, walking trails, and parking lots.

Both materials have the potential to pollute storm water runoff, especially when washout is conducted next to natural drainage channels or storm drain inlets. This BMP is primarily concerned with Portland cement concrete because:

- It has a liquid component.
- It requires immediate cleaning due to the short time period required for Portland cement concrete to harden.

Improperly disposed concrete may set up in the storm drain system and severely reduce the capacity of the system. Instruct drivers and equipment operators on proper disposal and equipment washout practices. Designate a foreman or supervisor to oversee and enforce concrete waste management procedures. Make supervisors aware of the potential environmental and consequences of improperly handled concrete wastes.

Asphalt Concrete Placement

Asphalt concrete also generates waste material that needs to be managed carefully; however, it is much more likely that a specialized asphalt paving contractor will be conducting the work. Paving and hauling vehicles need to be cleaned regularly; this should generally occur at an offsite location. Use

dry methods of removing hardened asphalt before using water or solvents. Recycle asphalt pavement (new and used) whenever possible. Small amounts of asphalt concrete waste may be incorporated into fill areas as allowed by the construction specifications. Do not allow asphalt waste material to leach pollutants into storm water.

Portland Cement Concrete Placement

The following steps will help reduce storm water pollution from Portland cement concrete wastes:

- Store dry materials under cover in areas protected from storm water runoff. Conduct concrete operations during dry weather and monitor weather forecasts throughout the workday.

- Avoid mixing excess amounts of fresh concrete or cement onsite. Do not allow excess concrete to be poured, which generates extra waste material that must then be cleaned up immediately.

- Perform washout of concrete trucks offsite or in designated areas only such as a specially designed soil-mixing sump protected by a sediment trap. Do not wash out concrete trucks into storm drains, open ditches, streets, or streams.

- For onsite washout:

  - Locate washout area at least 50 feet from storm drains, open ditches, or water bodies. Make sure that access to the washout area does not impact storm water channels. Washout locations may be flagged as necessary to ensure that concrete truck drivers utilize proper areas.
  - Contain runoff by constructing a temporary pit or bermed area large enough to handle for liquid and solid waste. Allow adequate freeboard for structural stability.
  - Wash out wastes into the temporary pit where the concrete can set, be broken up, and then disposed of properly. Be sure that the storm water collection system is protected by a sediment trap or similar practice.
  - The temporary pit containing waste concrete may be incorporated into fill areas as needed. The waste concrete may be broken into smaller pieces to allow proper soil compaction.

- Do not wash sweepings from exposed aggregate concrete into the street or storm drain system; collect and return sweepings to aggregate base stockpile or dispose as waste.

Portland Cement Concrete Demolition

- Monitor weather conditions and wind direction to ensure that concrete dust is not entering storm drains, watercourses, or surface waters. Sweep or vacuum as necessary to collect and control concrete dust. Construct sediment traps or other types of sediment detention devices downstream of demolition activities.

- Segregate and handle demolition materials such as reinforcing bars, roof shingles, lumber and wood framing, bricks, blocks, wires and cables, etc. Recycle materials whenever possible.

Maintenance

- Inspect subcontractors to ensure that concrete wastes are being properly managed. Foreman or construction supervisor shall monitor onsite concrete waste storage and disposal procedures continuously.

References **30, 31, 33, 34, 35, 43, 100, 137** (see BMP Manual Chapter 10 for list)

ACTIVITY: Structure Construction and Painting	AM – 19

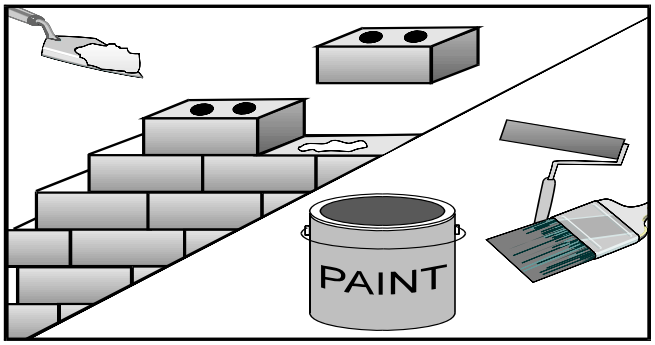

Targeted Constituents

● Significant Benefit ◗ Partial Benefit ○ Low or Unknown Benefit

○ Sediment	○ Heavy Metals	● Floatable Materials	○ Oxygen Demanding Substances	
○ Nutrients	◗ Toxic Materials	○ Oil & Grease	○ Bacteria & Viruses	● Construction Wastes

Description

Prevent or reduce the discharge of pollutants to storm water system and natural streams from structure construction and painting by enclosing, covering, or berming building material storage areas, using good housekeeping practices, using safer alternative products, and training employees and subcontractors. This management practice is likely to cause a significant reduction in floatable materials and construction wastes and also a partial reduction of toxic materials.

Approach

Construction and painting activities can generate pollutants that can reach storm water if proper care is not taken. The sources of these contaminants may be solvents, paints, paint and varnish removers, finishing residues, spent thinners, soap cleaners, kerosene, asphalt, and concrete materials, adhesive residues, and old asbestos insulation.

Educate employees and subcontractors of the importance of keeping pollutants out of the storm water system. Inform subcontractors of company policy on these matters and include appropriate provisions in subcontracts to make certain that proper housekeeping and disposal practices are implemented.

Ensure that good housekeeping practices are being followed. Cleanup at the end of each shift or at the end of the workday. Proper disposal and recycling of wastes is heavily dependent upon having enough waste containers. For a quick reference on disposal alternatives for specific wastes, see the Table AM-01-1 presented in the Employee Training BMP fact sheet.

Structure Construction

- Keep the work site clean and orderly. Remove debris in a timely fashion. Sweep the area regularly. If the construction work exposes

areas of soil, employ the appropriate soil erosion and control BMPs as needed.

- Properly store and dispose waste materials generated from construction activities. Consult the following BMPs for guidelines:

  AM-06, Material Delivery and Storage
  AM-08, Waste Management and Recycling
  AM-18, Concrete Waste Management

- Buy recycled products to the maximum extent practicable. Use less hazardous products if there is a choice.

- Carefully install all plumbing and storm water systems, including roof drains. Cross-connections between the sanitary and storm drain systems, as well as any other connections into the storm water system from inside a building, are illegal and violators may be prosecuted. Color code or flag pipes on the project site to prevent such connections, and explain identification system to all construction personnel

- Protect storm water pollutants from entering roof drainage systems, including gutters. Sweep or wash gutters to collect dust particles at the outlet of the downspout. A sock or geofabric placed over the outlet may effectively trap small particles. If the downspout is lined tight, place a temporary plug at the first convenient point in the storm drain system, pump out the water with a vacuum truck, and then clean the access point where the plug was placed.

- Protect storm drainage inlets and channels. Clean the storm drainage system in the immediate area after each stage of construction is completed.

Painting

- Never clean paintbrushes or rinse paint containers into a street, gutter, storm drain, or watercourse. Make sure that nearby storm drains are well marked to minimize the chance of inadvertent disposal of residual paints and other liquids.

- Conduct painting operations consistent with local air quality and Occupational Safety and Health Administration regulations.

- Enclose areas that contain painting operations in order to minimize drift. Use temporary scaffolding to hang drop cloths.

- Minimize overapplication and waste by using the proper equipment for painting. Clean up spills and drips immediately.

- Properly store paints and solvents. Properly store and dispose waste materials using guidelines contained in Table AM-01-1 of the Employee Training BMP fact sheet. Recycle residual paints, solvents, lumber, and other materials to the maximum extent practicable.

- If painting requires scraping or sand blasting of the existing surface, use a drop cloth to collect paint chips. Dispose the residue properly. If the paint contains lead or tributyl tin, it is considered a hazardous waste, which can not be disposed as regular solid waste.

- Mix paint indoors, in a containment area, or in a flat unpaved area not subject to significant erosion. Do so even during dry weather because cleanup of a spill will never be 100% effective. Dried paint will erode from sloped surfaces and be washed away by storms.

- If using water-based paints, clean the application equipment in a sink that is connected to the sanitary sewer or in a containment area where the dried paint can be readily removed. Remove as much paint as possible prior to washing. Store leftover paints to be kept for the next job or dispose paint properly.

- Latex paint and paint cans, used brushes, rags, absorbent materials, and drop cloths, when thoroughly dry and no longer hazardous, may be disposed of with other construction debris.

- For oil-based paints, paint out brushes to the extent practical, and filter and reuse thinners and solvents. Dispose of as hazardous waste any paint, thinners, residue and sludges that cannot be recycled. For a quick reference on disposal alternatives for paint, thinners, residue and sludges, see Table AM-01-1 presented in the Employee Training BMP fact sheet.

Maintenance

- Spot check employees and subcontractors daily throughout the work day to ensure that good housekeeping practices are being employed. Inspect nearby open channels and drainage inlets to ensure that pollution is not entering the storm water drainage system.

- Most jobs and projects require the foreman or building supervisor to inspect a job site daily for safety considerations. Any formalized checklist should also include inspections for storm water quality, waste management and pollution prevention.

Limitations

- Safer alternative products may not be available, suitable, or effective in every case.

- Hazardous waste that cannot be recycled must be disposed by a licensed hazardous waste hauler.

References **30, 31, 33, 34, 35, 100** (see BMP Manual Chapter 10 for list)

ACTIVITY: Stabilized Construction Access	ES – 01

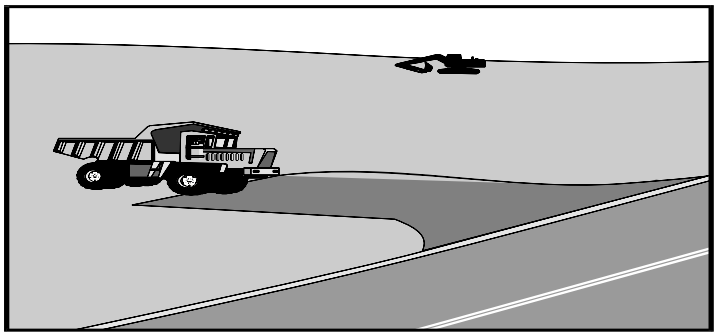

Targeted Constituents

● Significant Benefit ◗ Partial Benefit ○ Low or Unknown Benefit

● Sediment	○ Heavy Metals	○ Floatable Materials	○ Oxygen Demanding Substances	
○ Nutrients	○ Toxic Materials	◗ Oil & Grease	○ Bacteria & Viruses	○ Construction Wastes

Description

A stabilized construction exit involves a pad of aggregate underlain with filter cloth located at any point where traffic will be entering or leaving a construction site. Stabilizing the construction exit significantly reduces the amount of sediment (dust, mud) tracked offsite, especially if a washrack is incorporated for removing caked sediment. See ES-02, Tire Washrack, if soil and storm water runoff conditions warrant additional removal of mud from construction vehicles. This management practice is likely to create a significant reduction in sediment and a partial reduction in oil and grease. A separate construction entrance is strongly suggested and should be constructed with crushed stone.

Suitable Applications

- All points of construction ingress and egress, especially from dirt or soil conditions to a paved public roadway.

Approach

- Consider scheduling for dry season.
- Stabilized construction exits shall be constructed early in the process of setting up erosion and sediment controls, prior to the movement onsite of large vehicles and equipment.
- Stabilized construction exits are moderately effective in removing sediment from equipment leaving a construction site. Efficiency is greatly increased when a tire washrack is included as part of a stabilized construction exit (see ES-02).
- The exit must be properly graded to prevent runoff from leaving the construction site. When washracks are provided, washing is done on a reinforced concrete pad that drains to a properly constructed sediment trap or sediment basin. Other erosion and sediment controls should be in place to prevent sediments from entering into the storm water drainage system, ditch, or waterway.

- Construct on level ground where possible, at a location suitable for traffic safety and sight distance.

- Length is typically 50 feet and width is typically 20 feet. Busy exits will need the capability of handling a lane of traffic each way, typically 30 feet wide. It is more important for trucks exiting the site to be cleaned on the way out.

- Aggregate should generally be crushed, washed, and well-graded rock, with 2" to 3" median size (D_{50}) or larger, at a depth of at least 6 inches. Smaller aggregate, such as washed #57 stone, does not remove mud and clay soils and is easily pushed into the street by trucks, or can be washed away by heavy rains. It is strongly suggested that a separate construction entrance be established with crushed stone.

- Place aggregate on top of a medium to heavy geotextile (typically 12 ounces per square yard) suitable for material separation applications. Do not drop aggregate from a large height.

- Inspect and clean construction entrance and adjacent pavement at the end of each shift or workday; do not wash sediment and mud into the storm water system or into natural creeks or streams. Street sweeping or street vacuuming may be needed depending on the level of mud deposited on the roadway. Mud on public streets and roads is a traffic hazard and is a violation of Memphis and Shelby County Storm Water Ordinances.

- Provide ample turning radius as part of stabilized construction exits and entrances, taking into account the speed of traffic on the intersecting roads.

- It is strongly suggested that perimeter fencing be installed adjacent to the stabilized construction entrance in order to limit egress. Use chain-link fencing or silt fence in accordance with the level of security needed.

Maintenance

- Inspect daily to ensure that mud and dirt are not tracked onto roadways. Remove all sediment deposited on paved roadways at the end of each workday, do not wash the sediment and mud into the storm water system or into natural creeks or streams.

- Requires periodic top dressing with additional gravel material, especially if the subgrade is soft or becomes saturated.

- Remove gravel material and filter fabric at completion of construction, or as paved surfaces are finished.

- Restrict employees and subcontractors from using unauthorized construction ingress and egress points.

References **8, 30, 31, 32, 33, 34, 35, 43, 114, 115, 141, 144** (see BMP Manual Chapter 10 for list)

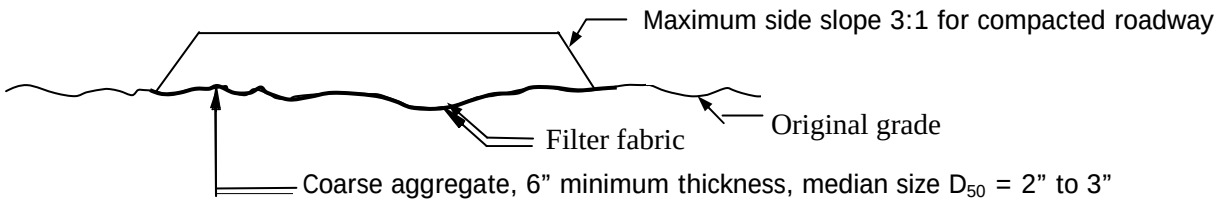

SECTION A-A

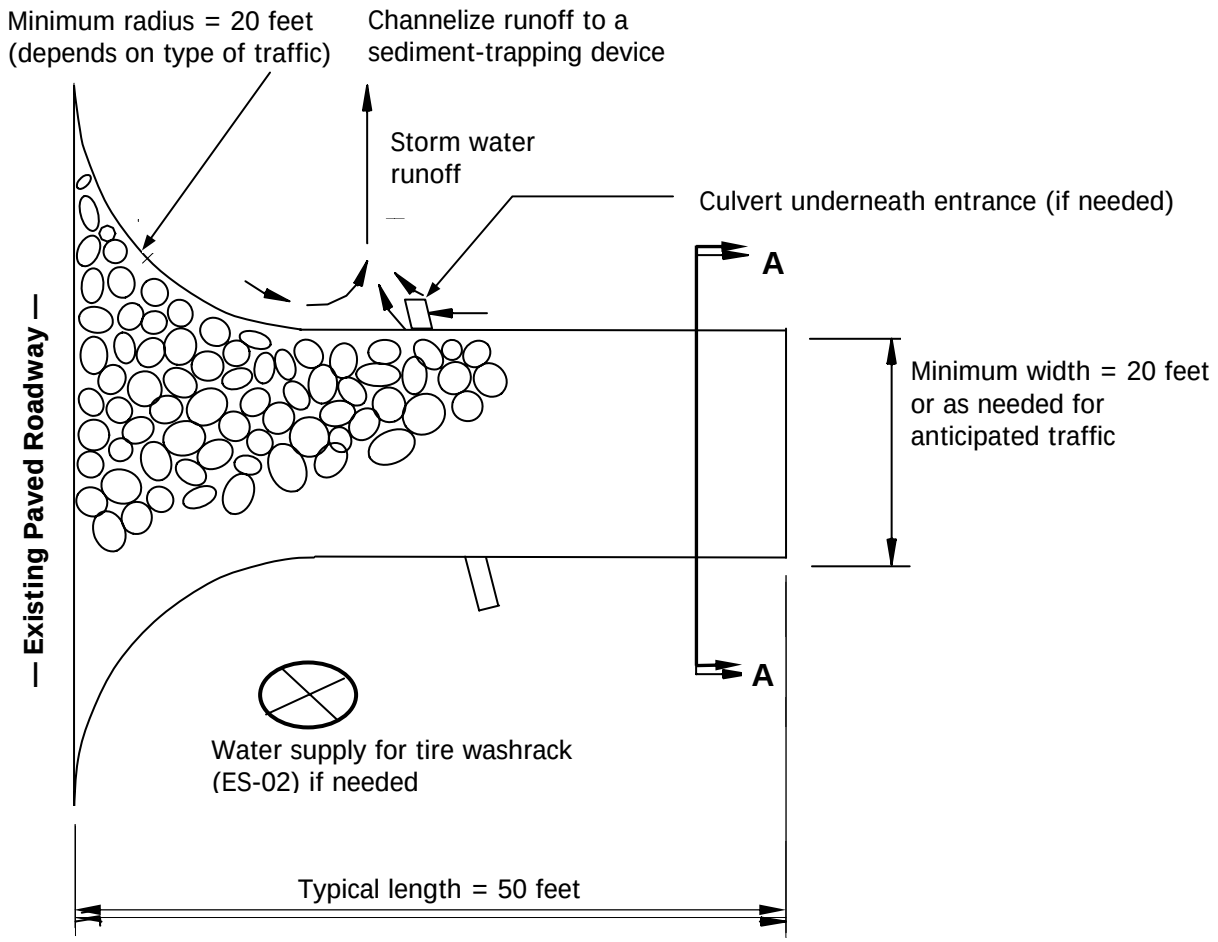

NOT TO SCALE

Figure ES-01-1
Stabilized Construction Entrance

ACTIVITY: Tire Washrack	ES – 02

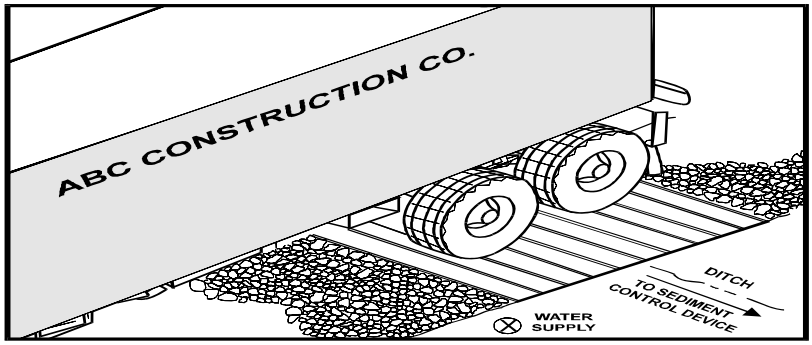

Targeted Constituents

● Significant Benefit ◗ Partial Benefit ○ Low or Unknown Benefit

● Sediment	○ Heavy Metals	○ Floatable Materials	○ Oxygen Demanding Substances	
○ Nutrients	○ Toxic Materials	○ Oil & Grease	○ Bacteria & Viruses	○ Construction Wastes

Description

An application that supports a stabilized construction exit. It is intended to prevent or reduce the discharge of pollutants as a result of vehicular egress from the construction site by providing facilities that remove mud and dirt from vehicle tires and undercarriages prior to entering public roads. See ES-01, Stabilized Construction Access, for basic application and installation guidelines. This management practice is likely to create a significant reduction in sediment.

Approach

- If a tire washrack is necessary, it shall be designed for anticipated traffic loads and placed on compacted level ground on a pad of coarse aggregate. The washrack will freely drain to a swale leading to a sediment-trapping facility.

- Require that all employees, subcontractors, and visitors with mud-caked tires or undercarriages use the washrack prior to exiting the construction site. It is strongly encouraged that perimeter fencing be installed adjacent to the construction entrance in order to limit egress to the designated construction exits.

- A typical washrack is shown in Figure ES-02-1. Other materials may be used, provided that the construction is durable and effective in removing dirt and mud. Increase the width of the tire washrack, or modify the washrack design, if the intention is to routinely wash vehicle undercarriages.

Maintenance

Remove accumulated sediment in tire washrack and sediment traps as necessary to maintain system performance. Inspect routinely for damage and repair as needed.

Limitations

- Requires a supply of water, either by overhead tank, pressurized tank or by water pipeline. All wash water shall drain into a sediment-trapping device such as a sediment basin or sediment trap.

- If chlorinated water (such as ordinary tap water or hydrant water) is used, allow the water to sit for 24 hours to allow chlorine to dissipate into the air prior to discharging effluent to the storm water system or to a natural stream. Effluent may be checked by a standard pool test kit to verify that it is chlorine free.

- May require a turnout or an extra-wide exit to avoid entering vehicles from having to drive through the tire washrack area (which is intended for exiting vehicles).

References **30, 31, 32, 33, 34, 35, 115** (see BMP Manual Chapter 10 for list)

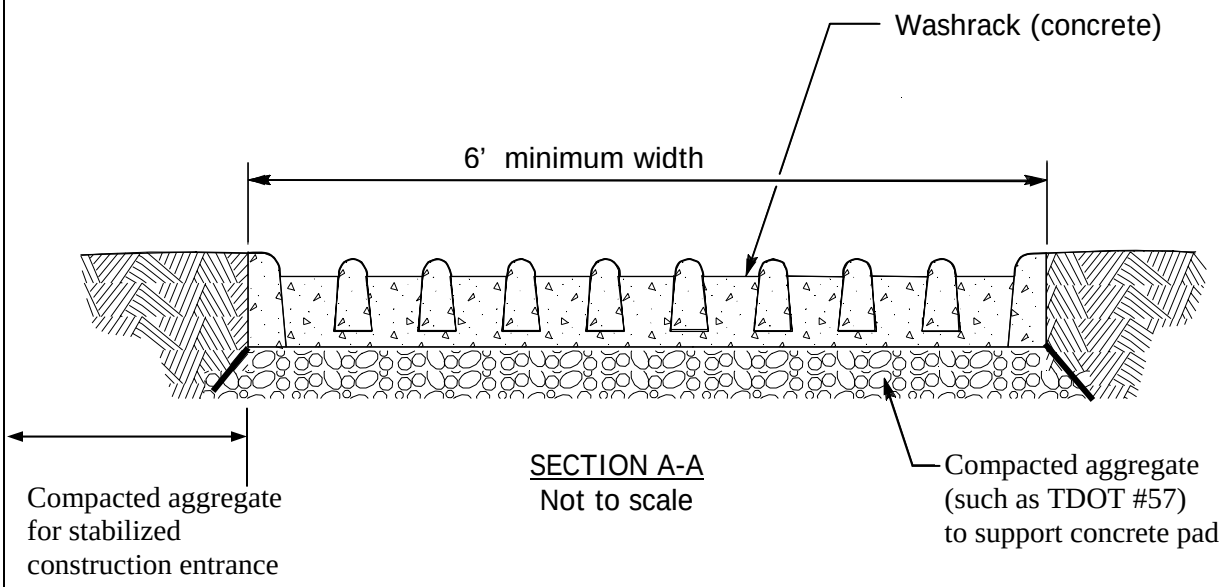

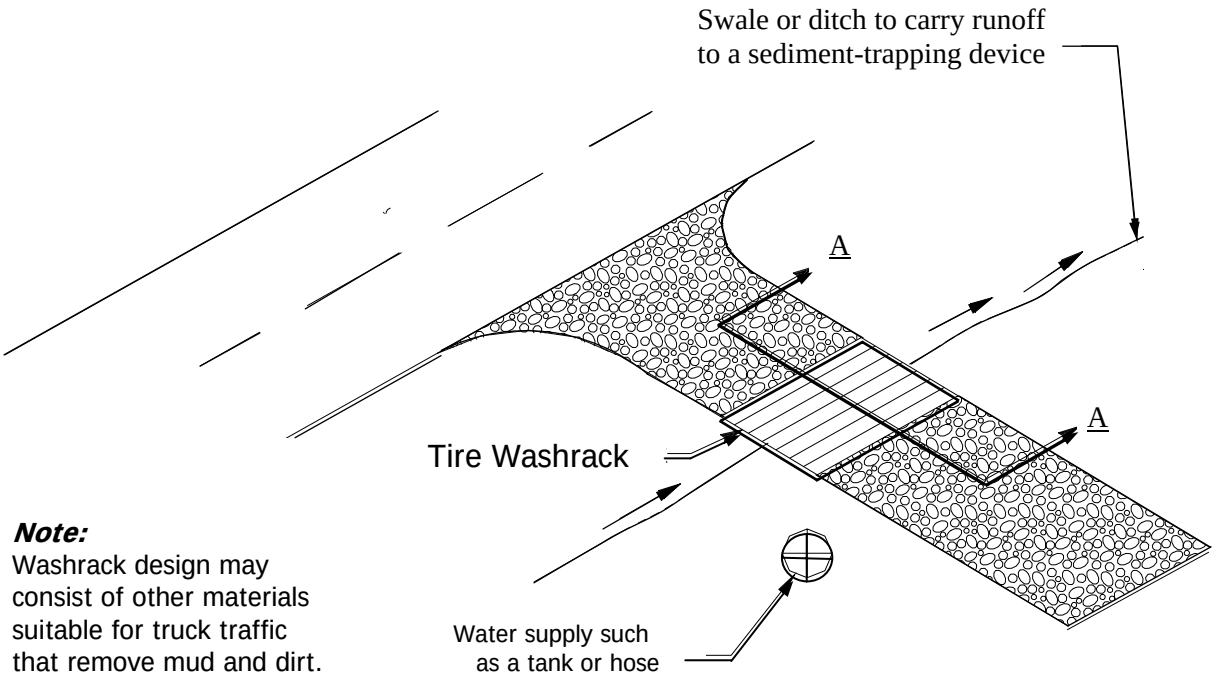

Note:
Washrack design may consist of other materials suitable for truck traffic that remove mud and dirt.

Figure ES-02-1
Typical Washrack for Construction Access Area

ACTIVITY: Construction Road Stabilization	ES – 03

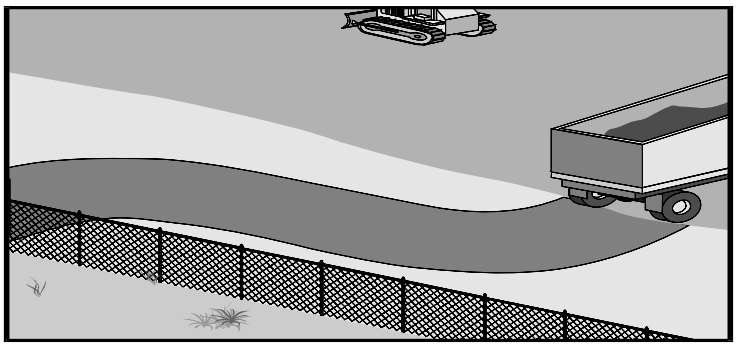

Targeted Constituents

● Significant Benefit ◗ Partial Benefit ○ Low or Unknown Benefit

● Sediment	○ Heavy Metals	○ Floatable Materials	○ Oxygen Demanding Substances	
○ Nutrients	○ Toxic Materials	○ Oil & Grease	○ Bacteria & Viruses	○ Construction Wastes

Description

Access roads, subdivision roads, parking areas, and other onsite vehicle transportation routes should be stabilized immediately after grading and frequently maintained to prevent and control erosion and dust. This management practice is likely to create a significant reduction in sediment.

Suitable Applications

- Temporary construction traffic.
- Phased construction projects with offsite road access.
- Detour roads for local or temporary construction traffic.
- Construction during wet weather.
- Any construction road with a temporary stream crossing must be approved by the Tennessee Department of Environment and Conservation (TDEC) prior to construction. Consult Figures ES-03-1 and ES-03-2 for typical illustrations of temporary stream crossings using a temporary bridge and culverts, respectively.

Considerations

Areas that are graded for construction vehicle transport and parking purposes are especially susceptible to erosion and dust. The exposed soil surfaces are continually disturbed, leaving no opportunity for vegetative stabilization. During wet weather, these areas become muddy and generate significant quantities of sediment that pollute storm drainage systems and nearby streams. Dirt roads become unstable during wet weather, rendering them unusable and delaying construction.

Efficient construction road stabilization not only reduces onsite erosion but can significantly speed transit, avoid instances of immobilized machinery, and generally improve site efficiency and working conditions during adverse weather conditions.

Permanent roads and parking areas should be paved as soon as possible after grading. Where feasible, alternative routes may be used for construction traffic in wet conditions. Wet conditions will generally require that the contractor reduce expected construction goals and adjust accordingly. Temporary gravel roads should be heavily considered on any slopes that are greater than 5 percent.

Approach

- Temporary construction roads should follow topographic contours to reduce erosion. Roadway slope should preferably be less than 10 percent and must not exceed 15 percent.

- Compact subgrade surface and provide drainage culverts as necessary. The use of engineered geotextile fabric is recommended to improve subgrade support and strength. Install according to manufacturer's recommendations for overlap and anchoring. Place initial lift of aggregate carefully on geotextile.

- Gravel roads should be a minimum of 6 inches thick with 2-inch approximate size coarse aggregate base applied immediately after grading or as recommended by design engineer or soils engineer.

- Roadways should be carefully graded to drain transversely. Provide drainage swales on each side of the roadway. Simple gravel berms without a trench can also be used. Installed inlets should be protected to prevent sediment from entering the storm sewer system.

- Temporary stream crossings may only be constructed in accordance with TDEC permits. Temporary stream crossings should be installed for the shortest possible time period so that the possibility of stream flooding is minimized. Generally, corrugated metal pipe is used for temporary pipes due to inexpensive cost and light weight. Minimum culvert size is 18 inches or as needed to pass five-year storm. However, if there is potential for flooding to buildings or structures, a higher design storm shall be used to minimize the risk.

- Chemical stabilizers or water are usually required on gravel or dirt roads to prevent dust; apply as needed to meet dust control requirements in AM-11, Dust Control. Chemical stabilization may also be used upon compacted native subgrade. These chemical controls should be applied in accordance with the manufacturer's directions.

Maintenance

- Maintain gravel roads so that mud and dirt are not tracked offsite from the project. Periodically apply additional aggregate on gravel roads. Use shovels to remove excess dirt from gravel roads. Do not wash gravel roads with water, which allows the sediment and mud to enter the storm water system, natural creeks, or streams.
- Active dirt construction roads are commonly watered three or more times per day during hot and/or dry weather.
- Inspect weekly and after each rain event. Look particularly for rill and gully erosion. Repair any eroded areas immediately.

Limitations

- The roadway must be removed or paved when construction is complete.
- Certain chemical stabilization methods may cause storm water pollution and are not generally allowed (see AM-11, Dust Control).
- Management of construction traffic is subject to air quality control measures. Contact TDEC Air Pollution Division or the City of Memphis Engineering Department for additional guidance.
- Gravel construction roads are moderately expensive, but cost is usually balanced by reductions in construction delays, travel times, street sweeping, etc.

References

8, 30, 31, 32, 33, 34, 35, 43, 114, 141, 144 (see BMP Manual Chapter 10 for list)

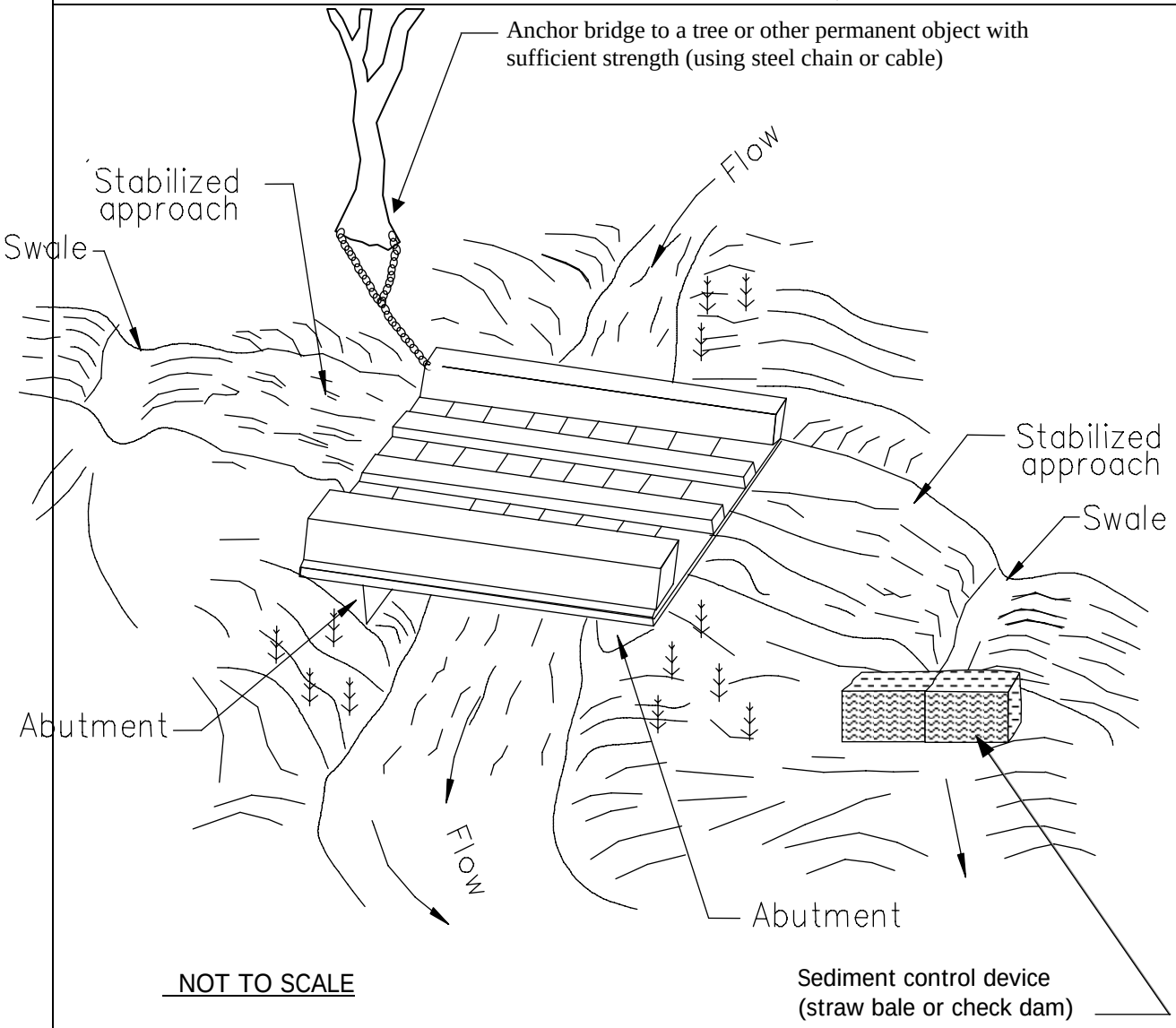

NOT TO SCALE

Notes:

1. Temporary bridge structure must be designed and inspected by a licensed structural engineer in order to protect the safety of all workers. Temporary bridge structure must be capable of passing the five-year storm at a minimum. A larger design storm must be used if there is potential for flooding buildings, structures, or adjacent property owners.

2. All temporary stream crossings must be approved and permitted by TDEC prior to beginning construction.

3. Securely anchor temporary bridge to an existing structure or tree.

Figure ES-03-1
Temporary Stream Crossing — Bridge

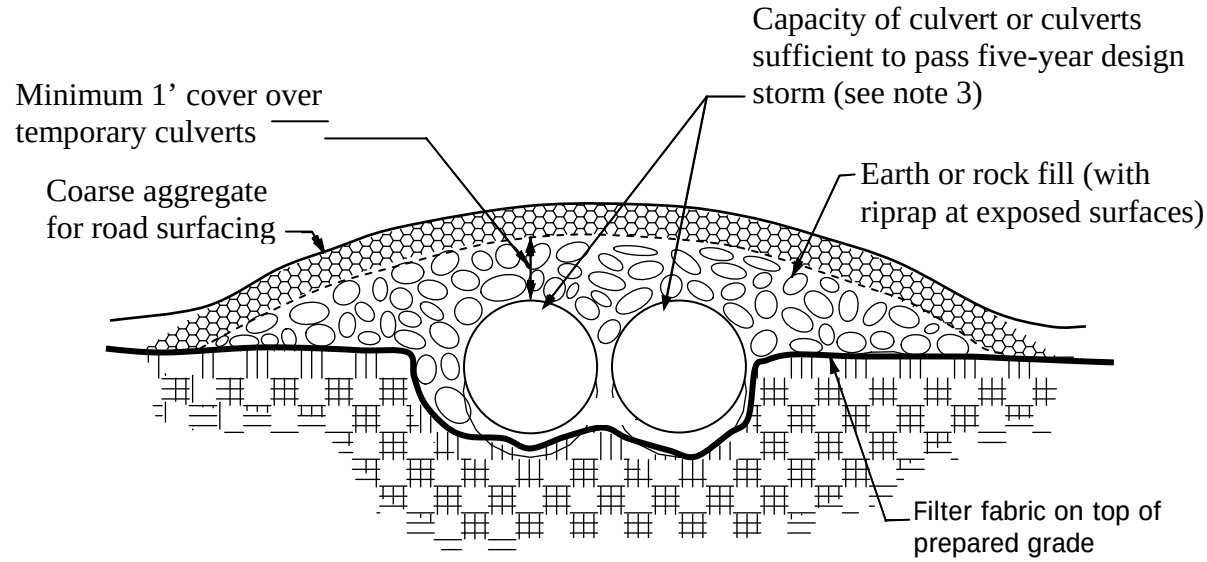

ELEVATION

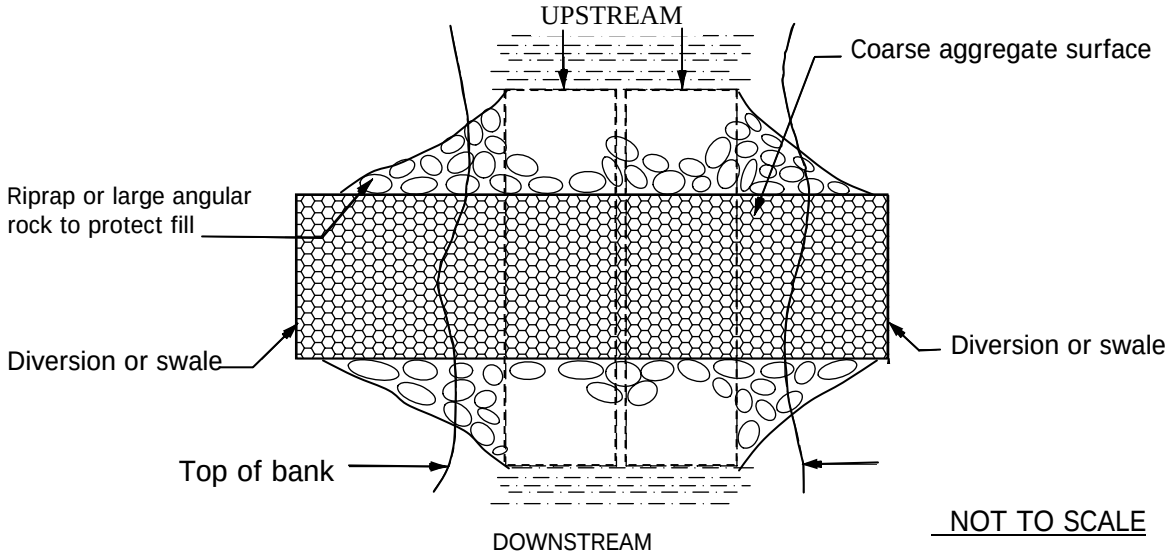

NOT TO SCALE

Notes:

1. Temporary culvert structure must be designed and inspected by a licensed engineer in order to protect the safety of all workers.

2. All temporary stream crossings must be approved and permitted by TDEC prior to beginning construction.

3. At a minimum, use a five-year design storm for culvert capacity. Use a larger design storm if there is potential for flooding to buildings, structures or adjacent property.

Figure ES-03-2
Temporary Stream Crossing — Culverts

ACTIVITY: Gradient Terraces and Silt Trenches	ES – 04

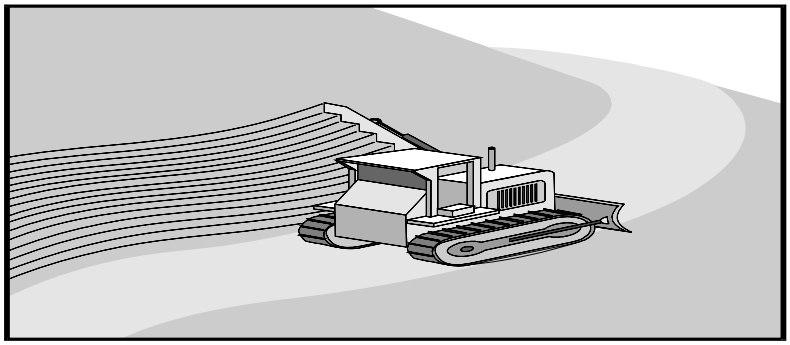

Targeted Constituents

● Significant Benefit ◗ Partial Benefit ○ Low or Unknown Benefit

● Sediment	○ Heavy Metals	○ Floatable Materials	○ Oxygen Demanding Substances	
○ Nutrients	○ Toxic Materials	○ Oil & Grease	○ Bacteria & Viruses	○ Construction Wastes

Description

Terraces prevent or reduce the discharge of pollutants to the storm drain system or to watercourses as a result of construction activity by decreasing runoff velocities, trapping sediment, increasing infiltration, and supporting the establishment of vegetative cover. This management practice is likely to create a significant reduction in sediment.

Silt Trenches are used to trap sediment during construction and require appropriate maintenance.

Suitable Applications

- Slopes steeper than 3:1 (H:V) and greater than 5 feet in height and that are not part of a trench or excavation.
- Graded areas with smooth hard surfaces or any cleared area prior to permanent seeding and planting.
- Where length of slopes need to be shortened by terracing. Note: terracing is usually permanent and should be designed under the direction of and approved by a licensed professional civil engineer based on site conditions. Terraces must be designed with adequate drainage and stabilized outlets.

Approach

- **Terraced slopes, as well as any slopes that are steeper than 3:1, should be designed by a licensed professional civil engineer based upon actual site conditions. Adequate drainage channels and diversions must be provided.**
- Terraces and benches are commonly used in trenches or excavations as a means of providing slope stability. It is extremely important that trenches and excavations meet all of the Occupational Safety and Health Administration (OSHA) regulations in Title 29 Code of Federal Regulations Part 1926, Subpart P — Excavations, latest edition. The

gradient terraces in this BMP are intended for slopes and hillsides, not for use in trenches and other excavations.

- Graded areas with smooth, hard surfaces give a false impression of "finished grading" and a job well done. It is difficult to establish vegetation on such surfaces due to reduced water infiltration and root penetration. Rough surfaces with uneven soil and rocks left in place may appear unattractive or unfinished at first, but they encourage water infiltration, speed the establishment of vegetation, and decrease runoff velocity. Rough, loose soil surfaces give lime, fertilizer, and seed some natural coverage and favorable moisture levels that aid seed germination.

- If terraced slopes become unstable due to diverted runoff patterns, then alternative measures should be considered. Alternative measures can include flow diversion, drains, swales, level spreaders, geotextiles, and bank stabilization practices as described in the ES section of the BMP Manual.

Application

There are several ways to create a gradient terrace that will meet slope stability requirements. Factors to be considered are the steepness of slope, mowing requirements, and whether or not the slope is formed by fill or by excavation. Generally, a slope cannot be mowed if it is steeper than 3:1 (H:V).

The following methods are shown in the attached figures:

Figure ES-04-1	Contour furrow
Figure ES-04-2	Serrated slope
Figure ES-04-3	Stepped slope, terraced slope

There are also different methods for achieving a roughened soil surface on a slope, and the selection of an appropriate method depends upon the type of slope. Roughening methods include grooving and tracking. The use of different equipment in various areas may be used to accomplish different levels of compaction or roughening.

Silt Trench

A silt trench may be used for slopes 3:1 (H:V) or flatter. This type of trench requires a bladed piece of equipment to cut a trench at the base of a slope and to periodically re-cut the trench when it becomes filled with sediment. This can be utilized over a variety of slope lengths. Affectivity depends upon frequency of maintenance.

Contour Furrows

Contour furrows may be used for slopes 3:1 (H:V) or flatter. Diversion berms or channels may be necessary at the top of slope and along the edges of the

slope in order to prevent concentrated storm water runoff from eroding the slope. The maximum distance between furrows shall be 40 feet, and the maximum slope length shall be 200 feet.

Serrated Slopes

A serrated slope may be used for slopes 2:1 (H:V) or flatter. This type of gradient terrace is labor-intensive in that bladed equipment will be needed to make numerous passes along a slope, beginning at the top and working downward. The maximum slope length shall be 100 feet.

Stepped Slopes

Graded areas steeper than 3:1 (H:V) that will not be mowed should preferably have a stepped slope as in Figure ES-04-3. The stair-stepping effect will help vegetation become attached and also trap soil eroded from the slopes above. Stepped slopes are particularly appropriate in soils containing rock. Each step catches rocky material, which sloughs from above, and provides a level site where vegetation can become established.

Steps should be wide enough to work with standard earth-moving equipment. Preferably the horizontal distance should be at least 1.5 times the vertical cut distance. Slightly grade the horizontal bench inwards (e.g., back towards the top of slope). Do not make individual vertical cuts more than 24 inches high in soft materials or more than 3 feet high in rocky materials. Groove the slope using machinery to create a series of ridges and depressions that run across the slope and on the contour.

Terraced Slopes

Terraced slopes are preferable for longer slopes that will be regularly mowed. A designed drainage channel is located within the terraces at regularly spaced intervals. The designed drainage channel shall have a regular cross section that includes slope and depth requirements. It may be necessary to locate intersecting channels to safely convey storm water to the bottom of the slope. The intersecting channels typically incorporate down drains, riprap, energy dissipaters, stilling basins, concrete aprons, and other measures to safely control velocities and erosive forces.

Fill Slope Roughening

- Place fill slopes with a gradient steeper than 3:1 (H:V) in lifts not to exceed 8 inches and make sure each lift is properly compacted. Fill slopes are not as stable as cut slopes, no matter how much compaction is applied.

- Ensure that the face of the slope consists of loose, uncompacted fill 4 inches to 6 inches in depth. This is not to be confused with proper

compaction necessary for slope stabilization. Use grooving or tracking to roughen the face of the slopes, if necessary.

- Apply fertilizer, mulch, or other soil amendments as necessary and as specified. Do not over fertilize. Then track or crimp. Do not blade or scrape the final slope face.

Cut Slope Roughening

- Create shallow grooves by normal tilling, disking, or harrowing or use a mechanical seeder. Make the final pass of any such tillage along the contour.

- Make grooves formed by such implements close together, less than 10 inches apart, and not less than 1 inch deep. Excessive roughness is undesirable where mowing is planned.

Maintenance

Periodically check the seeded or planted slopes for rills and washes, particularly after significant storm events greater than 0.5 inch. Fill rills and washes slightly above the original grade, then reseed and mulch as soon as possible.

Inspect monthly for the first year after construction. The slope should be inspected in early fall thereafter.

Limitations

- **Terraced slopes and stepped slopes, as well as any slopes that are steeper than 3:1, should be designed by a licensed professional civil engineer based upon actual site conditions. Adequate drainage channels and diversions must be provided.**

References

5, 30, 31, 32, 33, 34, 35, 43, 135, 144 (see BMP Manual Chapter 10 for list)

Notes:

1. Contour furrows will catch fertilizer, seed, mulch, and rainfall to reduce storm water runoff.

2. Contour furrows should be designed with appropriate channel slope to safely convey storm water without excessive velocity.

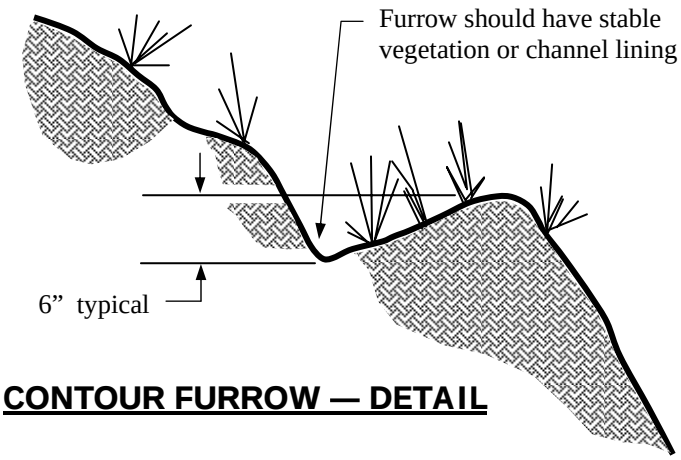

CONTOUR FURROW — DETAIL

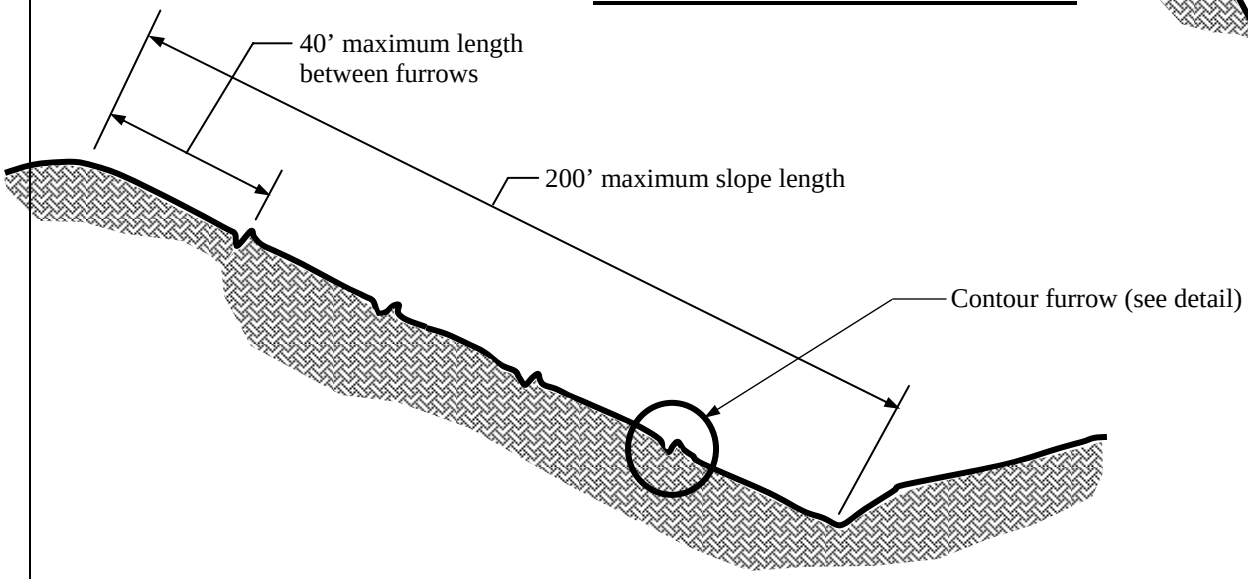

CONTOUR FURROW — SPACING

NOT TO SCALE

Figure ES-04-1
Furrow Layout

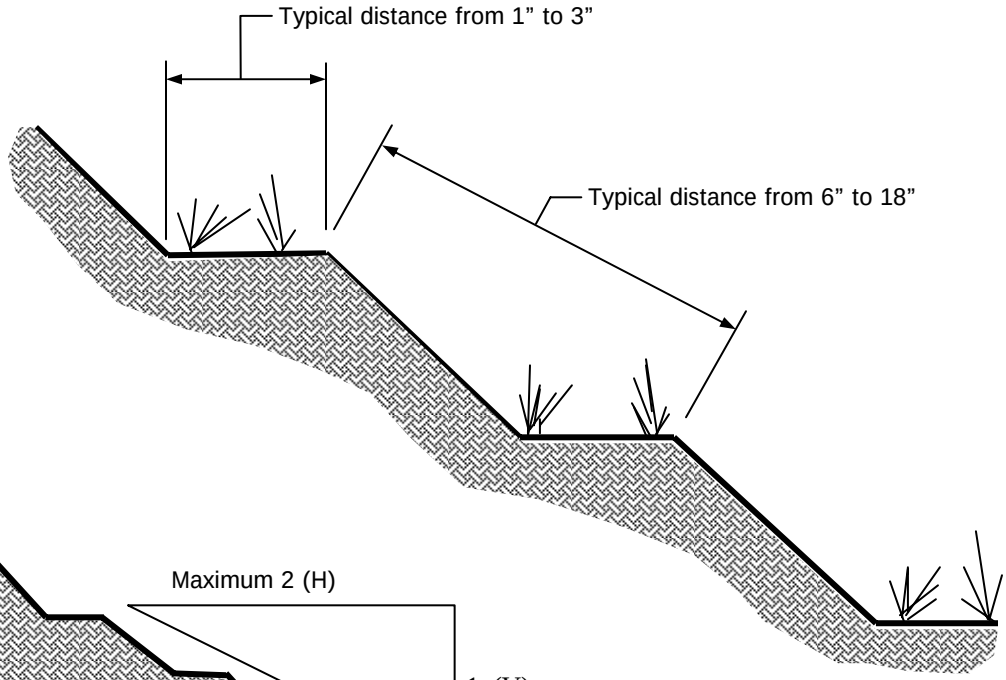

SERRATED SLOPE — DETAIL

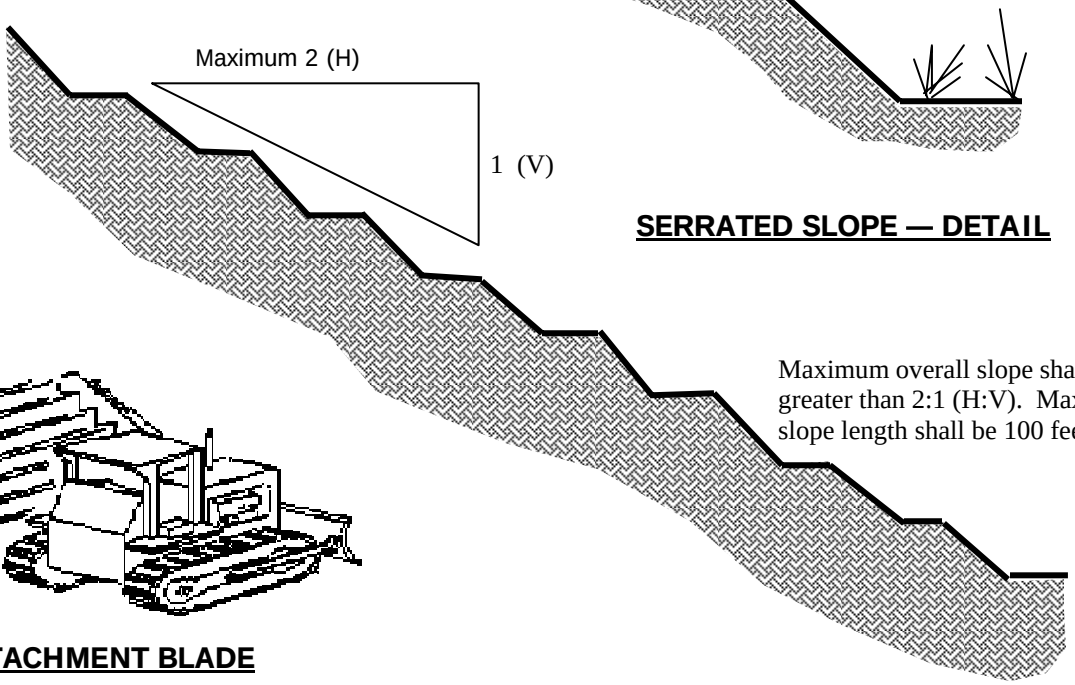

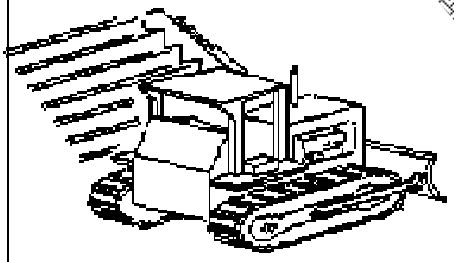

ATTACHMENT BLADE

MAXIMUM OVERALL SLOPE

Note:
Serrated slopes will catch fertilizer, seed, mulch, and rainfall to reduce storm water runoff.

NOT TO SCALE

Figure ES-04-2
Serrated Slope Layout

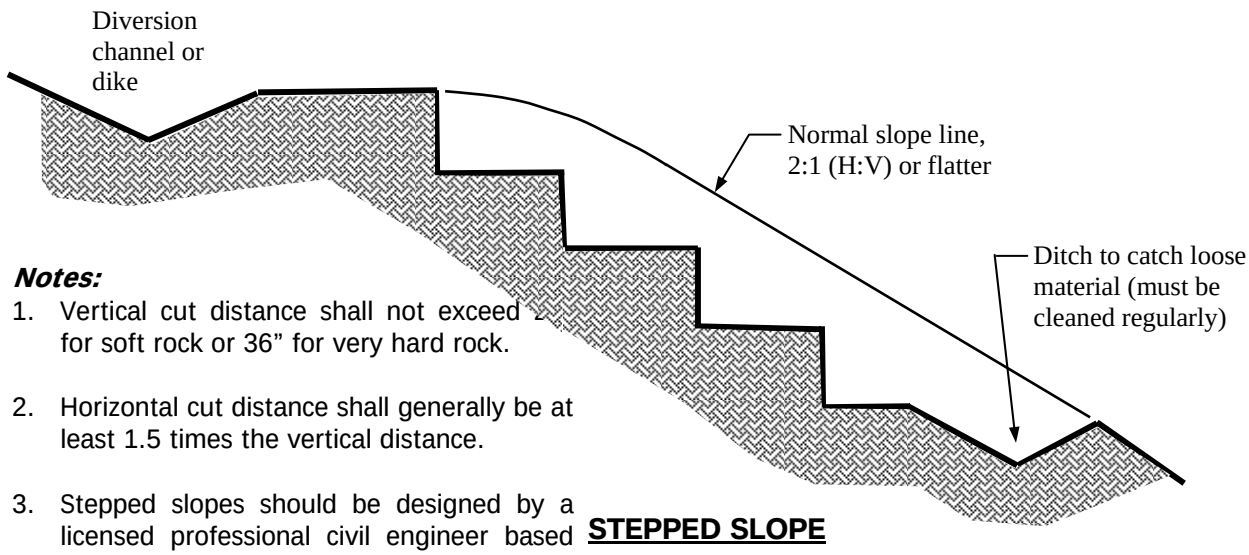

Notes:

1. Vertical cut distance shall not exceed 2[illegible] for soft rock or 36" for very hard rock.
2. Horizontal cut distance shall generally be at least 1.5 times the vertical distance.
3. Stepped slopes should be designed by a licensed professional civil engineer based upon actual site conditions.

STEPPED SLOPE

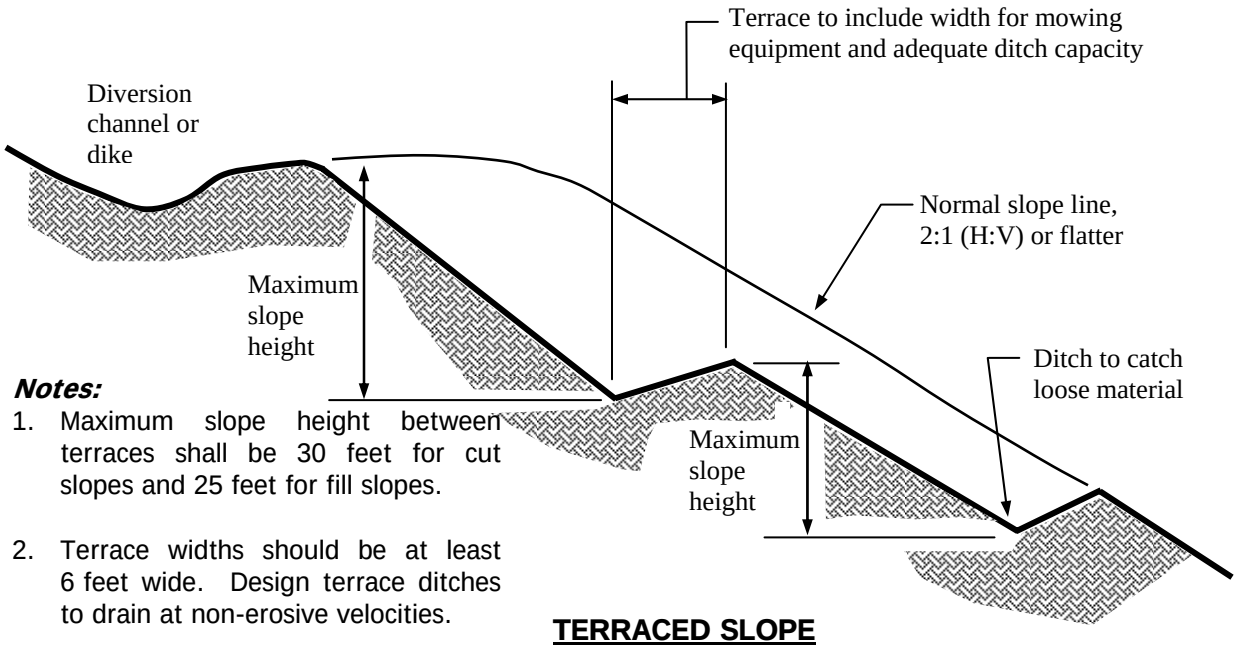

Notes:

1. Maximum slope height between terraces shall be 30 feet for cut slopes and 25 feet for fill slopes.
2. Terrace widths should be at least 6 feet wide. Design terrace ditches to drain at non-erosive velocities.
3. Terraced slopes should be designed by a licensed professional civil engineer based upon actual site conditions.

TERRACED SLOPE

NOT TO SCALE

Figure ES-04-3
Stepped Slopes and Terraced Slopes

ACTIVITY: Surface Roughening	ES – 05

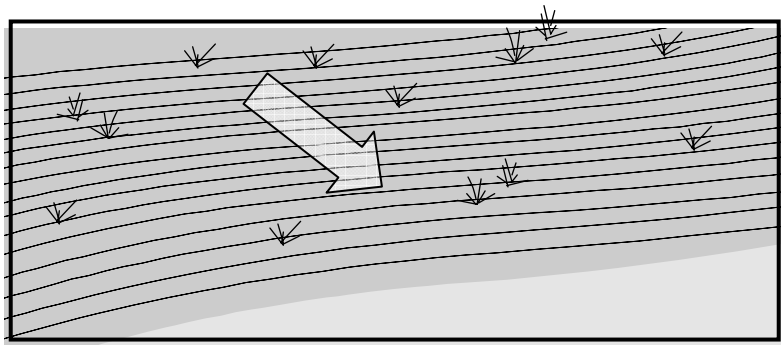

Targeted Constituents				
● Significant Benefit		◗ Partial Benefit	○ Low or Unknown Benefit	
● Sediment	○ Heavy Metals	○ Floatable Materials	○ Oxygen Demanding Substances	
○ Nutrients	○ Toxic Materials	○ Oil & Grease	○ Bacteria & Viruses	○ Construction Wastes

Description

Soil roughening is a technique used for creating unevenness on bare soil. The primary function of surface roughening is to reduce erosion potential by decreasing runoff velocities, trapping sediment, and increasing infiltration of water into the soil. It should be used as a permanent measure to prepare slopes for permanent vegetation. **When running tracked equipment over soil, never track vertically.**

Suitable Applications

- On all construction slopes where seeding, planting, and mulching to stabilize exposed soils will benefit from surface roughening.
- Graded areas with smooth, hard surfaces, and the potential for erosion of clay, silt, or sand-sized particles.

Approach

Roughening methods may include tilling, disking, or harrowing, which must be done across the slope along the contour. Tracking, by contrast, must be done up and down the slope. Factors to be considered in choosing a method are slope steepness, mowing requirements, type of soil, and whether or not the slope is formed by cutting or filling. Generally, a slope cannot be mowed if it is steeper than 3:1 (H:V). Roughening is performed after the slopes have been graded and dressed. Steep slopes may require the techniques discussed in ES-04, Gradient Terraces.

Cut Slope Roughening

- Consider the use of stepped slopes or terraced slopes. Tilling, disking, and harrowing are acceptable methods of roughening a cut slope. Groove the slope using machinery to create a series of ridges and depressions that run across the slope and on the contour. Make grooves less than 10 inches apart and not less than 1 inch deep. Excessive roughness is undesirable where mowing is planned.

- There are special attachments to equipment specifically for aerating soils, particularly for prepared lawns for houses, parks, golf courses, etc. These attachments should be used as directed by the manufacturer.

- Roughening with tracked machinery should preferably be limited to soils with a sandy textural component to avoid undue compaction of the soil surface. Operate tracked machinery up and down the slope to leave horizontal depressions in the soil. Each pass should move across the slope gradually. Do not backblade during the final grading operation. Seed and mulch roughened areas to obtain optimum seed germination and growth.

Fill Slope Roughening

- Place fill slopes in lifts not to exceed 8 inches and make sure each lift is properly compacted. Fill slopes are not as stable as cut slopes, no matter how much compaction is applied. Therefore, slopes that are steeper than 3:1 (H:V) should be avoided. The face of the slope should consist of loose uncompacted fill 4 to 6 inches deep.

- Use grooving or tracking to roughen the face of the slopes as necessary. Operate tracked machinery up and down the slope to leave horizontal depressions in the soil. Each pass should move across the slope gradually. Apply fertilizer, mulch, or other soil amendments as necessary prior to grooving or tracking. Do not blade or scrape the final slope face. Seed and mulch roughened areas to obtain optimum seed germination and growth.

Maintenance

Periodically check the seeded or planted slopes for rills and washes, particularly after significant storm events greater than 0.5 inches. Fill rills and washes slightly above the original grade, then reseed and mulch as soon as possible.

Limitations

- Surface roughening may increase grading costs and result in sloughing in certain soil types. Surface roughening and/or stepped slopes may not be practical for sandy, steep, or shallow soils.

- Use equipment that will not roll over on steep slopes. Keep blades and other attachments in the lowered position. Rollover bars must be installed.

- Roughening alone as an erosion control measure is of limited effectiveness in intense rainfall events. If roughening effects are washed away in a heavy storm, the surface will have to be roughened again and new seed and mulch applied.

References

34 (see BMP Manual Chapter 10 for list)

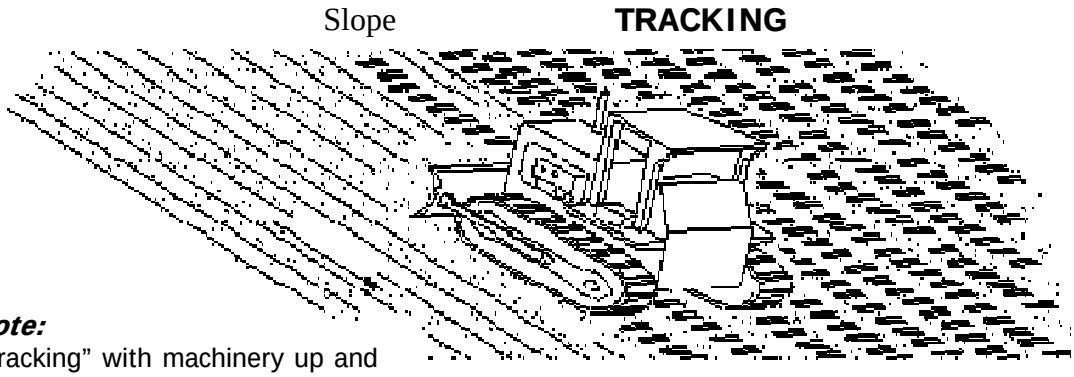

Note:
"Tracking" with machinery up and down the slope will catch fertilizer and seed and provide grooves to catch rainfall and reduce runoff. Never track vertically.

Figure ES-05-1
Surface Roughening — Equipment Tracking

ACTIVITY: Topsoil	ES – 06

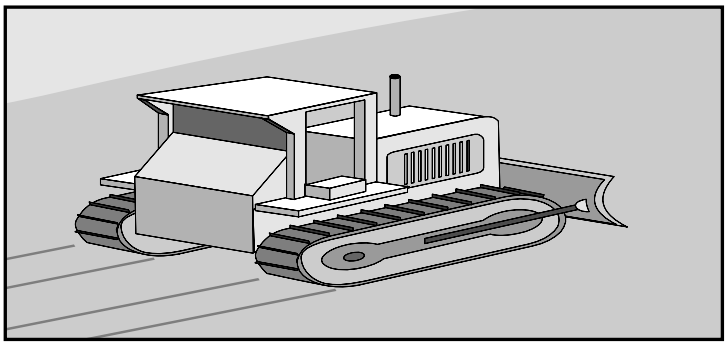

Targeted Constituents

● Significant Benefit ◗ Partial Benefit ○ Low or Unknown Benefit

● Sediment	○ Heavy Metals	○ Floatable Materials	○ Oxygen Demanding Substances	
○ Nutrients	○ Toxic Materials	○ Oil & Grease	○ Bacteria & Viruses	◗ Construction Wastes

Description

Topsoil from the construction site should be preserved and used to enhance the final site stabilization with vegetative cover. This management practice is to be done in support of temporary or permanent seeding, in conjunction with erosion source control practices such as silt fences and mulching.

Suitable Applications

This technique is applicable to all types of areas where earth-disturbing activities expose subsoil layers that are poorly suited to supporting vegetation growth. Topsoil is generally not placed on areas that are steeper than 3:1 or that are not adequately graded and compacted.

Approach

Preservation and reuse of native topsoil helps to improve the success rate of new vegetation. Importing topsoil may be necessary for some areas that do not have fertile soil layers.

Typically, a minimum of 4 inches of stabilized topsoil is needed to support grass vegetation. Trees, shrubs, and vines will require a good layer of topsoil in addition to the proper subsurface soils.

Stripping Topsoil

- Vegetative material that is cleared and grubbed during construction can be economically reused as compost or mulch onsite if handled correctly. Inspect to be sure that nuisance vegetation and weeds are not composted. Stockpile and water as necessary.

- Prior to stripping away topsoil, make certain that all downslope sediment control practices are in place and operational.

- Strip topsoil (typically 4 to 6 inches) only from those areas that will be disturbed by excavation, filling, road building, or compaction from equipment. Locate topsoil stockpiles where they will not erode, block drainage structures, or interfere with work on the site. Contain sediment using measures such as silt fences, straw bales, temporary seeding, erosion control mats, etc.

Placing Topsoil

- Prior to placing topsoil, verify that the subgrade has been graded and compacted. Scarify subgrade to a depth of 3 inches or disk the subgrade to ensure that topsoil bonds with underlying earth.

- Imported topsoil, if needed, shall be from a reliable non-contaminated source. Perform pH tests prior to placement in order to determine soil amendments and treatments necessary to support vegetation growth. Perform pH tests whenever a change in topsoil is noted or a different source is selected.

- Apply a minimum of 4 inches topsoil evenly. Compact soil with one or two passes of a tracked piece of equipment up and down the slope (see ES-05, Surface Roughening) to reduce erosion potential.

- Apply fertilizer at rates suitable for the particular type of vegetation and soil conditions. Consult an agricultural extension agent or a horticulturist for specific instructions and recommendations (or see UT Agricultural Extension Web site).

- Table ES-06-1 shows the typical amount of lime needed for topsoil that does not meet normal pH requirements. The amount of lime will also depend on the particular type of vegetation selected.

Maintenance

Inspect areas of newly applied topsoil frequently until vegetation is fully established. Maintain newly graded topsoil areas and inspect regularly. Restore areas showing wash and settlement to the specified grades, with a tolerance of 1 inch above or below. Finish grading is ordinarily done by hand shovel operations.

Limitations

- Topsoil can wash away if erosion control practices are not provided. Place stockpiles in protected areas with silt fences and other controls.

- Topsoil should not be applied to slopes steeper than 3:1 (H:V) without the use of suitable erosion control matting or geotextiles (see ES-11 and ES-12).

References **33, 34, 35, 139, 172** (see BMP Manual Chapter 10 for list)

Table ES-06-1
Typical Amount of Lime Required for Grass Seeding

Topsoil pH **Less than 4.0** **4.0 to 4.5** **4.5 to 5.0**	**Lime required per 1,000 square feet** **5.5 to 6.0** **6.0 to 8.0** **Over 8.0**
Less than 4.0	(soil not suitable for use)
4.0 to 4.5	160 pounds
4.5 to 5.0	120 pounds
5.0 to 5.5	80 pounds
5.5 to 6.0	40 pounds
6.0 to 8.0	0 pounds
Over 8.0	(soil not suitable for use)

ACTIVITY: Mulch	ES – 07

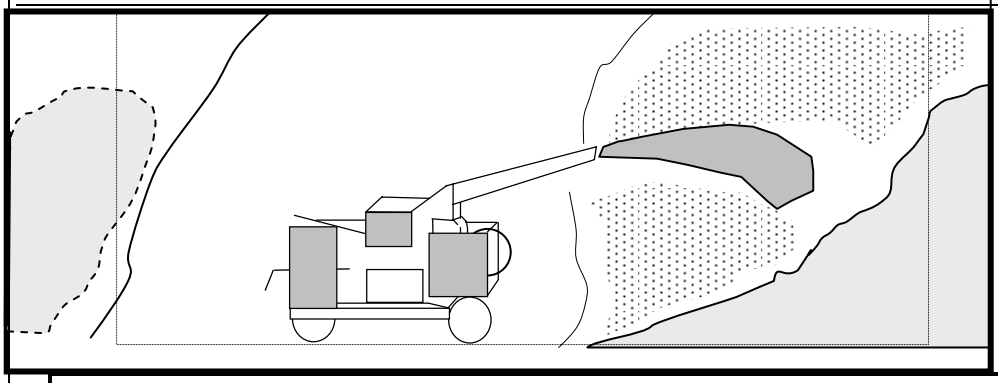

Targeted Constituents

● Significant Benefit ◗ Partial Benefit ○ Low or Unknown Benefit

● Sediment	○ Heavy Metals	○ Floatable Materials	○ Oxygen Demanding Substances	
◗ Nutrients	○ Toxic Materials	○ Oil & Grease	○ Bacteria & Viruses	○ Construction Wastes

Description

Mulch is the application of shredded or processed material to the ground surface for the purpose of protecting vegetation. Mulch is used to temporarily or permanently stabilize cleared or freshly seeded areas. Common types of mulches include organic materials, straw, wood chips, and bark or other wood fibers. Mulch is likely to create a significant reduction in sediment and a partial reduction in nutrients. When clearing land for development, consider shredding the land's trees and shrubs for use as a ground cover mulch to prevent erosion.

Uses

- Temporary stabilization of freshly seeded and planted areas or during periods unsuitable for growing permanent vegetation.
- Permanent stabilization around established plants, such as trees or shrubs, in order to prevent the growth of weeds and to maintain soil moisture conditions.
- On poor or marginal soils, to add organic matter and retain moisture and fertilizer as a strategy to speed establishment of permanent vegetative cover.
- As a short-term ground cover on steepened slopes, to reduce rainfall impact, decrease the velocity of sheet flow, and settle out sediment.

Approach

The term "mulch" is commonly used to describe a variety of materials, such as:

- Grass clippings from lawnmowers (see AM-03)
- Shredded tree bark and other woody materials to protect trees and shrubs
- Straw or hay scattered across a slope or disturbed area
- Peat mulch, used in planting trees and shrubs (see ES-10)

Grass Clippings

The disposal of grass clippings is also discussed in AM-03, Preservation of Existing Vegetation, and in Table AM-01, Quick Reference for Disposal Alternatives. Since grass clippings and other vegetative matter decompose quickly, these materials should not be disposed as municipal waste to be carried to a landfill. Mulching mowers are specifically designed to make short grass clippings that will remain on the ground surface and decompose quickly. The essential practice for protecting storm water is to remove grass clippings from streets, driveways, ditches, storm water channels, detention basins, slopes and any other areas subject to storm water flow.

Grass clippings may also be composted, along with most types of non-acidic tree leaves. Consult the Natural Responses Conservation Service (NRCS) office or Web site for publications on mulching mowers, cutting height and frequency, composting, and many other lawn care topics. In general:

- Grass clippings can be left on lawns if the volume is small and the clippings have been chopped into small pieces. Remove grass clippings from paved surfaces and drainage channels.

- Remove only one-third of the total height of the grass blades at each mowing. These clippings can be left on the lawn and are unlikely to wash away.

- Mulching mowers work best when about 1 inch of grass is removed at each mowing. For actively-growing lawns, this equates to once a week (depending on the type of grass, amount of fertilizers, sun/shade, etc.)

- If two inches or more is cut at each mowing, mow more frequently or use a bagging-type mower to prevent accumulation of excess clippings on the lawn surface. Rainfall, temperature, and soil fertility may cause variations in the normal mowing interval.

General Description

Mulch is basically defined as a layer of material spread uniformly over a ground surface to prevent weeds and/or retain soil moisture. Mulch is usually an organic material such as shredded tree bark, hay, straw, sawdust, or leaves. Mulch prevents erosion by protecting the soil surface from rain and runoff impact and fostering growth of new seeds or seedlings. The choice of mulch should be based on the size of the area, site slopes, amount of sunlight or shade, proximity to drainage features and natural streams, soil hardness and moisture, weed potential, and availability of mulch materials. Organic materials may also decompose and aid the soil in providing nutrients for vegetation.

Inorganic materials such as inert black plastic or manufactured landscaping fabric can also be used to prevent weeds and retain moisture, but are not considered as mulch. Newspaper is also commonly used to control weeds, but is subject to leaching of ink and chemicals. The use of newspaper within soil for weed control is discouraged.

Grass Vegetation

Mulch helps to establish temporary or permanent grass vegetation for disturbed soils after a construction project or land-use reclamation project. Straw and hay mulch are often selected due to the ease of application and good results. Alternatively, hydroseeding (including hydraulic application of mulch) is often performed, especially on steep slopes and locations that require quick establishment of grass.

Applying straw or hay mulch to a slope or hillside will require either physical measures (crimping, erosion control mats) or chemical binders (special asphalt emulsions) to keep the mulch from washing away or blowing away. The binder is also called a tacking agent or tackifier. A typical application rate might be 100 pounds of straw or hay mulch per 1,000 square feet.

Application

Vegetative Fibers

Loose hay or straw are the most common mulch materials used in conjunction with direct seeding of soil. Straw mulch is preferable over hay mulch, which may contain weeds and other objectionable material. Straw mulch is the short-term protection most commonly used with seeding. Wheat or oat straw is recommended from the current season's crop (less than 12 months old). Average fiber length should exceed 6 inches.

Straw mulch is applied immediately after seeding, either by machine or by hand distribution. Anchor the mulch in place using a tacking agent or plastic netting or by punching into the soil mechanically. Plastic netting (see ES-11, Erosion Control Blankets and Mats) requires wire staples, wooden stakes, or plastic stakes. If the slopes are too steep for netting, then tacking agents should be selected on the basis of longevity and ability to hold the fibers in place.

Shredded Vegetation

"Green" mulch is produced by the recycling of vegetation trimmings such as grass, shrubs, and trees. Methods of application are generally by hand, although pneumatic methods are currently being developed. Green mulch can be used as a temporary ground cover with or without seeding. The green material should be evenly distributed at a depth necessary to prevent erosion. Anchor green mulch in place with a tacking agent on steep slopes

and in areas where overland sheet flow is anticipated. The quality of green mulch may vary, and there is a strong potential for establishing unwanted weeds and plants.

Wood and Bark Chips

Wood and bark chips are suitable for landscaped areas that will not be closely mowed. Wood and bark chips should not be used on steep slopes and therefore do not require tacking agents. Wood chips may require nitrogen treatment (12 pounds/ton typical rate) to prevent nutrient deficiency. Bark chips do not require additional nitrogen fertilizer.

If there is a wood source near the project site, wood and bark chips can be very inexpensive. Caution must be used in areas of steep slopes since both wood and bark chips tend to wash down slopes exceeding 6 percent. Wood and bark chips are also used around trees and shrubs or in ornamental or landscape gardens. Typical depth is 2 to 3 inches.

Hydraulic Mulch

Hydraulic mulch can be made from virgin wood fibers or from recycled waste paper sources (newsprint, magazine). There are also mulches available that are a combination. In general, virgin wood fibers contain a longer fiber length than recycled paper mulch.

Hydraulic mulch is mixed in a hydraulic application machine (such as a hydroseeder or a mulch blower) and then applied as a liquid slurry. The hydroseeder slurry contains recommended rates of seed and fertilizer for the site, usually specified with a tacking agent. Slurry must be constantly agitated to keep the proper application rate and achieve uniform effective coverage.

Hydraulic application of seeding and other materials (hydroseeding) can be done quickly and efficiently with the correct equipment and ingredients. Also, hydraulic application must be done when no rainfall is expected, preferably within a 24-hour time period.

Virgin wood fiber mulch consists of specially-prepared wood fiber that does not contain any growth-inhibiting factors. The mulch is manufactured and processed so the fibers will remain in uniform suspension in water under agitation to form a homogeneous slurry. The fiber lengths should be as long as possible to increase the effectiveness for erosion control. Wood fiber mulching should not be used in areas of extremely hot summer and late fall seasons because of fire danger. When used as a tacking agent with straw mulch, wood fiber mulches are good for steep slopes and severe climates.

A wood fiber mulch can be manufactured containing a tacking agent in each bag or specified without a tacking agent. A typical construction specification for wood fiber mulch is as follows:

- Composed of 100% wood fiber.
- Moisture content (total weight basis) not to exceed 12%.
- Organic matter content (dry weight) = 99.3% minimum.
- Inorganic matter (ash) content (dry weight) = 0.7% maximum.
- Controlled pH values
- Water-holding capacity (dry weight) = minimum 1.2 gallons per pound.

A high-quality type of hydraulic matrix known as a Bonded Fiber Matrix is generally manufactured for easy application by the appropriate equipment. It generally contains a tacking agent mixed with the wood fibers.

A combination mulch may include wood fiber and paper fiber, with a tacking agent. A hydraulic matrix can be formulated using varying quantities of these components. A typical mixture is as follows:

- 12 pounds per 1,000 square feet wood fiber mulch.
- 24 pounds per 1,000 square feet recycled paper mulch.
- 2 gallons per 1,000 square feet acrylic copolymer (55% solids content).

Maintenance

- Avoid traveling on mulched and seeded areas. Maintain traffic barriers and fencing as necessary.
- Inspect mulched areas weekly and after rainfall for damage or deterioration. Replace as necessary. Continue inspections until vegetation is firmly established.

Limitations

- Organic mulches may affect the pH of soil.
- The tackifier may lose adhesiveness during very cool weather or due to extreme temperature variations.

References

8, 9, 30, 31, 32, 33, 34, 35, 43, 114, 115, 123, 125, 126, 135, 136, 144 (see BMP Manual Chapter 10 for list)

ACTIVITY: Seeding	ES – 08

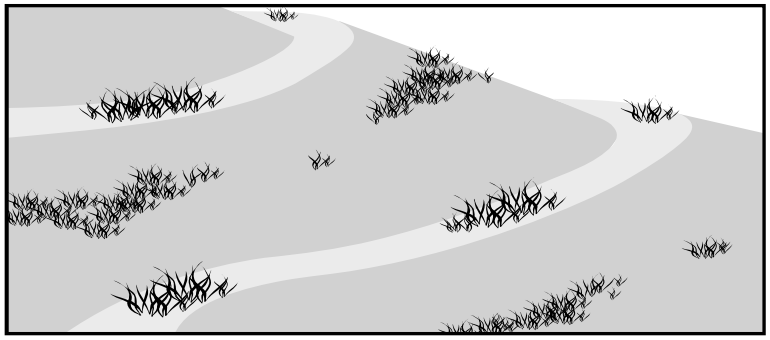

Targeted Constituents

● Significant Benefit ◗ Partial Benefit ○ Low or Unknown Benefit

● Sediment	○ Heavy Metals	○ Floatable Materials	○ Oxygen Demanding Substances	
◗ Nutrients	◗ Toxic Materials	○ Oil & Grease	○ Bacteria & Viruses	○ Construction Wastes

Description

Temporary or permanent stabilization of soil, with rapidly growing annual or perennial grasses, is used to prevent erosion on disturbed areas. Temporary seeding is performed for graded areas that are not ready to receive permanent vegetation. Permanent seeding is performed for finished construction areas and for eroded areas that need a permanent vegetation cover.

Suitable Applications

- Apply temporary seeding whenever grading operations are temporarily halted for more than 14 days and final grading of exposed surfaces is to be completed within one year. Apply temporary seeding to soil stockpiles.

- Apply permanent seeding whenever grading operations are completed and all construction operations will not impact the disturbed area. Apply permanent seeding to all non-construction areas that show signs of excessive erosion.

Approach

Sheet erosion, caused by the impact of rain on bare soil, is the source of most fine particles in sediment. To reduce this sediment load in runoff, the soil surface itself should be protected. The most efficient and economical means of controlling sheet and rill erosion is to establish vegetative cover.

Proper seedbed preparation and the use of quality seed are important in this practice. Failure to carefully follow sound agronomic recommendations will often result in an inadequate stand of vegetation that provides little or no erosion control.

Temporary seeding is essential to preserve the integrity of earthen structures used to control sediment, such as dikes, diversions, and the banks and dams of sediment basins. Temporary seeding may prevent

costly maintenance operations on other erosion control systems. Annual plants that sprout rapidly and survive for only one growing season are suitable for establishing temporary vegetative cover.

Permanent seeding is necessary to prevent long-term erosion of topsoil from the land surface. If performed correctly, permanent seeding will provide many benefits such as increased land value, aesthetics, and animal habitats, in addition to reduced erosion and sedimentation.

General Seeding Guidelines

- Verify that erosion control devices are functioning. Prepare ground surface using methods in ES-04, Gradient Terraces and Silt Trenches, and ES-05, Surface Roughening.

- Select desired type of grasses. Consult a horticulturist or the Shelby County Extension Service, located at the Agricenter. This office has a wide variety of brochures and pamphlets for selecting all types of vegetation such as lawns, parks, or field crops.

- Analyze topsoil for fertilizer and lime requirements. Fertilizer and lime shall be uniformly incorporated into soil at a minimum depth of 1 inch, typically by rakes.

- A typical fertilizer application rate is anywhere from 5 to 20 pounds per 1,000 square feet with commercial grades 6-12-12 and 10-10-10 being commonly used. Fertilizer should be free-flowing and uniform in composition. Fertilizer packaging should indicate weight, chemical analysis, and date of production.

- Lime requirements are listed in Table ES-06-1 for soils with a pH less than 5.5. Requirements for crushed agricultural limestone are generally a minimum of 85% by weight calcium carbonate and magnesium carbonate.

- Purchase seed from a reputable dealer in original packaging that indicates percentage of seed mix, date of production, net weight, seed purity, and germination rates.

- Apply selected seed at rate recommended for temporary or permanent seeding, using seeding package instructions or as directed by local experts (such as a horticulturist or agricultural extension agent). Seed should be sown uniformly by means of a rotary seed spreader, hydraulic equipment, or hand broadcasting.

- Apply straw mulch with tackifier, especially to seedlings in the fall for winter cover or on slopes that exceed 3:1 (H:V). See ES-07, Mulch, for additional description and methods.

- A tackifier should generally be used in conjunction with mulch for steep slopes. A tackifier is an inflammable, non-toxic, non-asphaltic, organically formulated product that is capable of holding mulch and soil in place. Tackifier compound may contain a color additive to assist in the uniform application of product after mixing with water.

- Tackifier and water shall be blended and applied at a rate that is in accordance with the manufacturer's written instructions. Written instructions may give different application rates for revegetation (mulch tackifying) and for erosion control (soil stabilization). Application shall be performed with a fine spray immediately after each area is mulched.

- Do not seed during rainfall events or when heavy rain is predicted. No seeding shall be done during windy weather or when the ground surface is frozen, wet, or otherwise unsuitable. Permanent seeding shall not be performed during December and January. Temporary seeding may be performed during the winter months with expectations that additional seeding is required in the spring.

- For slopes steeper than 3:1 or where surface water cannot be diverted from flowing over the face of slopes, install erosion control matting such as jute nets or excelsior mats (see ES-11, Erosion Control Blankets and Mats). Mulch and tackifier are not required for areas that receive erosion control matting.

- Do not allow any equipment or material placed on any seeded areas. Erect suitable barricades and guards to prevent equipment, vehicles, or labor from traveling onto or over any seeded areas.

- Maintain newly seeded areas until final acceptance of the construction project or until erosion problems have stopped. Restore areas that are washed out or that have settled. Re-seed as necessary until an acceptable grass stand has been achieved.

Temporary Seeding

- All areas receiving temporary grass mixture shall receive an application of fertilizer and be protected with mulch or erosion control matting. Apply fertilizer at a minimum rate of 5 pounds per 1,000 square feet. Uniformly incorporate into soil for a depth of 1 inch. Lightly water to aid dissipation of fertilizer.

- Apply seed mixture at recommended application rate evenly in two intersecting directions by the use of a mechanical spreader. Do not seed an area in excess of that which can be mulched on the same day. Do not sow immediately following rain, when ground is too dry, or during windy periods.

- Straw mulch shall be applied at a minimum rate of 100 pounds per 1,000 square feet and traversed with mechanical roller or other device specially manufactured for crimping. Mulch shall be applied immediately after seeding. All mulched areas shall receive an application of tackifier.

- Roadside: Temporary mixtures for Tennessee Department of Transportation (TDOT) projects are listed in Table ES-08-1; these seed mixtures grow rapidly and are low-maintenance. Seeding rate is typically 1 pound per 1,000 square feet.

- Lawns and parks: Apply the desired permanent grass mixture at reduced rates. Use straw mulch liberally, and use additional slope stabilization methods for steep grades. Typical seeding rate is 2 to 3 pounds per 1,000 square feet.

- Fields and open spaces: Consult local agricultural extension office for recommended types of crops or grasses, and follow suggested seeding dates.

Permanent Seeding

- All areas receiving permanent grass mixture shall receive an application of fertilizer and be protected with mulch or erosion control matting. Apply fertilizer at a rate of not less than 10 pounds per 1,000 square feet. Apply lime at rate based on pH of soil. For dry seeding, uniformly incorporate into soil for a depth of 1 inch and lightly water to aid the dissipation of fertilizer.

- Apply seed mixture at recommended rates evenly in two intersecting directions by the use of a mechanical spreader or hydroseeder. Do not seed area in excess of that which can be mulched on same day. Do not sow immediately following rain, when ground is too dry, or during windy periods.

- Combined hydraulic application of seed, fertilizer, and mulch may be performed. Tackifier application may be within the combined mixture if allowed by manufacturer's recommendations. Hydraulic spraying equipment and mixture shall be designed so that when the grass mixture is sprayed over the area, the mixture components shall be equal in quantity to the specified rates.

- Wood fiber or cotton mulch shall be applied at a minimum rate of 35 pounds per 1,000 square feet. As an option, straw mulch can be utilized at a rate of 100 pounds per 1,000 square feet. Mulch shall be applied immediately after seeding or during seeding. All mulched areas shall receive an application of tackifier.

- Roadside: Permanent mixtures for TDOT projects are listed in Table ES-08-2; these seed mixtures (primarily fescue) grow rapidly and are low-maintenance. Seeding rate is typically 2 pounds per 1,000 square feet.

- Lawns and parks: Tall fescue grasses (such as Kentucky 31) have good resistance to high temperatures, drought, and soil acidity. Bermudagrass is commonly used for lawns and for athletic fields; it does not fare well in shady areas. Shady lawns and parks may require a more specialized seed mixture. Plant in the late summer or early spring to take advantage of mild climate conditions in spring and autumn. Typical seeding rate is 5 to 8 pounds per 1,000 square feet.

- Fields and open spaces: Consult the local Shelby County Extension Service, located at the Agricenter. This office has a wide variety of brochures and pamphlets for selecting field crops and planting dates.

Hydroseeding

Hydroseeding is the wet hydraulic spraying of seed, fertilizer, tackifier, and usually mulch in a one-step process. Materials are mixed with water in a slurry tank to form a homogeneous slurry, which is then sprayed on the soil surface at a uniform rate in two intersecting directions by a hydraulic seeder.

Ordinary mulch is not suitable for hydroseeding. Mulch for hydroseeding is generally virgin wood fiber mulch at a rate of 35 pounds per 1,000 square feet, manufactured to be uniformly suspended as a slurry. Alternatively, straw mulch can be applied after hydroseeding at a rate of 100 pounds per 1,000 square feet.

Maintenance

- Inspect frequently within the first six weeks of planting to see if grass stands are uniform and dense and to assure that appropriate moisture levels are maintained. Make provisions to water as needed to penetrate to a depth of 6 inches.

- Check for damage caused by equipment or heavy rains. Damaged areas should be repaired, fertilized, seeded, and mulched. Tack or tie down mulch as necessary.

Limitations

- Annual rye grass and a few other types of annual grass may reseed the following year without assistance. This may make it difficult to establish a different type of grass as permanent vegetation.

- Uneven application of fertilizer, lime, seed, or other materials may cause patchy growth and erosion. Over-application of fertilizer or lime causes storm water runoff pollution.

References **33, 34, 35, 115, 139, 172, 179** (see BMP Manual Chapter 10 for list)

Table ES-08-1
Temporary Seed Mixtures (TDOT)

Groups Less than 4.0 4.0 to 4.5 4.5 to 5.0	Seeding Dates	Grass Seeds 5.5 to 6.0 6.0 to 8.0 Over 8.0	Percentages
D	January 1 to May 1	Annual Rye	33%
		Korean Lespedeza	33%
		Summer Oats	34%
E	May 1 to July 15	Sudan-Sorghum	100%
E	May 1 to July 15	Starr Millet	100%
F	July 15 to January 1	Balboa Rye	67%
		Annual Rye	33%

Table ES-08-2
Permanent Seed Mixtures (TDOT)

Groups Less than 4.0 4.0 to 4.5 4.5 to 5.0	Seeding Dates	Grass Seeds 5.5 to 6.0 6.0 to 8.0 Over 8.0	Percentages
A	March 30 to June 1	Kentucky 31 Fescue	80%
		Korean Lespedeza	15%
		English Rye	5%
B	June 1 to August 15	Kentucky 31 Fescue	55%
		English Rye	20%
		Korean Lespedeza	15%
		German Millet	10%
B1	May 15 to July 1	Bermudagrass (hulled)	70%
		Annual Lespedeza	30%
C	August 1 to December 1	Kentucky 31 Fescue	70%
		English Rye	20%
		White Clover	10%
C1	February 1 to December 1	Kentucky 31 Fescue	70%
		Crown Vetch	25%
		English Rye	5%

ACTIVITY: Sodding	ES – 09

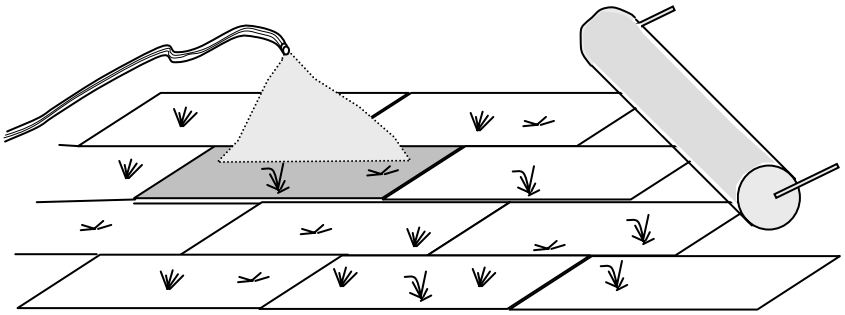

Targeted Constituents

● Significant Benefit ◗ Partial Benefit ○ Low or Unknown Benefit

● Sediment	○ Heavy Metals	○ Floatable Materials	○ Oxygen Demanding Substances	
○ Nutrients	○ Toxic Materials	○ Oil & Grease	○ Bacteria & Viruses	○ Construction Wastes

Description

The placement of sod allows the rapid establishment of grass vegetation, along with a layer of good topsoil. This can be beneficial in critical erosion areas, adjacent to natural streams and ditches, and as a filter strip to slow storm water runoff and trap sediment.

Suitable Applications

- Critical erosion areas such as slopes, drainage channels, detention basins, and stream banks.
- Adjacent to paved areas such as streets, sidewalks, and parking lots to slow storm water runoff and to filter pollutants.
- Adjacent to catch basins and yard inlets to filter pollutants.
- Areas without enough topsoil to establish seeded vegetation and grass.

Approach

Sodding is usually specified for aesthetic reasons on projects that have a substantial landscaping budget. However, sodding can also be useful for projects that have almost no landscaping budget and a limited erosion control budget. The use of sod adjacent to paved areas can greatly reduce the amount of sediment entering streets and parking lots. The use of sod in detention basins and adjacent to catch basins will greatly reduce the maintenance effort to clean storm water structures.

The type of grass should be selected on the basis of use, site conditions and slope, amount of sunlight, intended grass height, etc. Popular types of grass that can be placed by sodding include:

– Kentucky 31 Fescue (all-purpose, residential, and commercial lawns)
– Bermuda grass (athletic fields)

Bermuda grass is considered a warm-weather grass that generally will not thrive in the Memphis area without extensive maintenance. Additional information and advice on the best selection for sodding can be obtained from the Shelby County Extension Service office at the Agricenter and Web site. There are also many professional associations for sod and turfgrass producers.

Soil preparation is just as necessary for sod placement as it is for seeding operations. Do not place sod on compacted and hard soils. Disking and harrowing will usually be necessary to prepare the subgrade soil for receiving sod. See Table ES-09-1 for a comparison of advantages for seeding versus sodding.

The use of certified sod will ensure that a high-quality, dense stand of grass is established on fertile soil that is generally free from weeds, insects, and plant disease. Tennessee (through the Department of Agriculture) and adjoining states control the sale and movement of sod, in order to prevent the spread of pests and plant disease.

Production

Sod is grown in controlled environments using certified seeds and carefully controlled soil. Obtain sod from a reputable dealer with appropriate certifications to ensure best quality. It may be beneficial to visit the facility in order to verify that adequate watering and fertilization equipment is used.

Sod should be at least 3/4 inch thick, consisting of a thatch and root zone that is capable of supporting the sod during transportation and placement. Biodegradable polypropylene netting is often placed on the sod early in the growing cycle as an erosion control measure to protect seedlings. Sod shall consist of live, well-rooted growth of the specified permanent grasses. Often a blend of two or more tolerant grasses is specified, in order to increase survival rates. Sod shall be free from insects and disease. Sod shall be free from weeds such as Johnson grass, dandelion, nutgrass, poison oak or ivy, crabgrass, thistles, rushgrass, morning glory, etc.

Sod is generally harvested and transported the same day, in order to limit stress on the grass. Transportation distances are usually less than 100 miles, which also ensures that the sod is grown in climate conditions similar to the installation location. Harvesting may be done by slabs or rolls using mechanical cutters. Typical slab dimensions are 18” wide and 24” long. Transportation methods must minimize hot and cold temperatures and also desiccation by air during highway speeds.

Placement

Carefully prepare the subgrade soils prior to placing sod. Remove rocks, large clods, and roots as a first step. The subgrade soils must be loosened to a depth of at least 3 inches prior to placing sod. Apply fertilizer and lime to the subgrade immediately prior to placing sod. Soil testing is recommended to determine fertilizer and lime application rates.

Typical application rates are 10 pounds fertilizer and 50 pounds agricultural lime per 1,000 square feet.

Inspect sod upon delivery; reject damaged sod or desiccated sod. Install sod soon after delivery to the project site. Keep sod in the shade prior to placement. Liberally water subgrade soils prior to placement to establish moisture beneath the sod layer. Place sod in a brick pattern so that there are no seams in the longer direction. Seams in the shorter lawn direction are permissible but should be limited in length. Align direction of sod so that cutting and trimming of slabs will be minimized. Do not use pieces of sod that are damaged.

Carefully handle sod during unloading and placement to retain as much topsoil as possible for the grass root systems. Each strip of sod should be closely fitted to the existing edges. A machine cut may be angled in such a way that butt ends will fit. A mason's trowel is often used to correctly fit and tuck ends of sod together. Do not stretch a piece of sod to cover a few more inches; trim sod and place an additional piece of the correct size. Roll the sod into place using a lightweight hand-operated roller in order to create solid contact with the subgrade soil.

Sod should be immediately watered after installation, at a rate of up to 1 inch the first day during the heat of summer. Apply water gently and evenly so that the soil is moist throughout. Water at least daily for a period of three weeks.

Sod placed in drainage channels or slopes steeper than 4:1 will usually require pegs or staples. A typical pattern is four pegs/staples per block of sod, with an additional secure point in the middle for large pieces of sod. Additional jute netting or other erosion control may be required for drainage channels with substantial flows.

Maintenance

- Sod maintenance is important to preserve the cost and effort of investment. Sod should be kept moist for at least 3 weeks until it is properly rooted. Do not mow sod for three weeks; set the mowing height to only trim the grass blades by 1/3 or less when cutting the sodded grass for the first time.

- Inspect sod daily, especially after heavy storms or severe winds. Repair damage promptly using stakes or pegs. High-quality topsoil may be used to repair chinks or gaps from storm damage.

Limitations

- Placement of sod can be expensive and time consuming. Sod must be handled carefully. Appropriate moisture conditions can be difficult to maintain during transportation and placement, especially in hot weather.

- Do not place sod during the winter or when frozen conditions may occur. Ideal conditions generally occur in the middle of spring or autumn.
- Protect newly placed sod from heavy use and vehicle traffic for at least one month. Protect sod from burrowing animals and from foot traffic (children playing) when possible.

References **30, 31, 32, 141, 167, 172, 179** (see BMP Manual Chapter 10 for list)

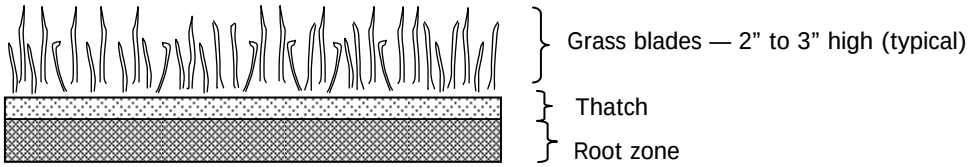

Table ES-09-1
Comparison of Seeding and Sodding

Advantages of seeding:	Advantages of sodding:
Less expensive materials	Establish high-quality grass surface
Less labor and effort required	Less chance of failure
No transplanting	Immediate aesthetics
Grass develops in final location	Immediate erosion control
	No weeds

ACTIVITY: Trees, Shrubs, and Vines	ES – 10

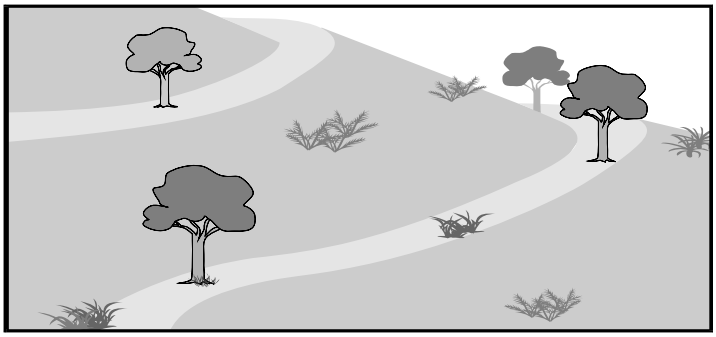

Targeted Constituents

● Significant Benefit ◗ Partial Benefit ○ Low or Unknown Benefit

● Sediment	○ Heavy Metals	○ Floatable Materials	○ Oxygen Demanding Substances	
◗ Nutrients	○ Toxic Materials	○ Oil & Grease	○ Bacteria & Viruses	○ Construction Wastes

Description

Planting trees, shrubs, vines, and other ground covers will provide long-term stabilization of soil. The primary functions of permanent vegetation are to improve aesthetics, reduce erosion by slowing runoff velocities, enhance infiltration and transpiration, trap sediment and other particulates, protect soil from raindrop impact, and provide habitat for wildlife. This management practice is likely to create a significant reduction in sediment.

Suitable Applications

- Appropriate for site stabilization both during construction and after construction.
- Open areas and slopes, such as parks or playgrounds.
- Landscaping corridors and buffer areas.
- Near buildings and structures, to provide shade and aesthetics.

Approach

See AM-03, Preservation of Existing Vegetation, in order to plan removal of existing vegetation during construction projects. Existing vegetation should be preserved whenever possible, particularly native species that are aesthetically pleasing and provide wildlife habitats. In addition, Table AM-03-1 contains a brief description of tree location requirements for obtaining a grading permit, building permit, preliminary plan review, or construction within right-of-way.

Prior to the planting of trees, consult Table AM-03-1, which contains the Tree Ordinance located in Memphis and Shelby County Code, Zoning, Appendix A. The following list includes some of the major points in the ordinance:

Section 33-3 — Definition of an existing tree
Section 33-4A.1 — Applies to every property except for single-family dwelling units
Section 33-4C — Maximum limit on the destruction or removal of trees
Section 33-5B — Minimum rate of tree planting/tree bank contribution
Section 33-5A.7 — Maintain and replace planted trees up to 18 months later

Table ES-10-1 contains the approved plant list of tree species for planting within Shelby County from section 32 of the zoning ordinances. This list contains the most common types of trees planted in this area; other trees may be approved by the city horticulturist.

Selecting the right type of vegetation to be planted depends on many factors such as sunlight or shade, water requirements, allowable room, soil pH, amount of soil available, tolerance to automobile emissions or street deicing salts, fertilizer and other maintenance requirements, preference for deciduous or evergreen trees, and aesthetic considerations. For instance, some trees may grow considerably and create problems for overhead utilities or underground pipes.

Trees in particular are essential for improving the urban environment. They provide shade and protection from the elements for humans and for wildlife. Trees greatly improve ground temperatures, air temperatures, the movement of air, humidity, and the transmission of urban noise.

This BMP contains general guidance for selecting and for planting the various types of vegetation. Extensive guidance is available from the Shelby County Extension Service at the Agricenter. There are many publications available in hard copy and at the Web site for topics such as native trees, urban trees, small trees, trees for poorly drained soils, fruit trees, etc.

There are also many different species of vines and ground covers from which to choose, but care must be taken in their selection. It is essential to select planting materials suited to both the intended use and specific site characteristics. Additional information can be obtained from local nurserymen, landscape architects, and the Shelby County Extension Service.

For construction projects, planting should be performed as soon as final grading is completed, unless there is a specific planting time recommended for a particular plant. In areas where no activity is performed, vegetation may be maintained or established along landscaped corridors and buffer zones to act as filter strips.

Permanent planting during the construction stage of projects will require careful coordination between the local agency inspectors, project managers, construction managers, and landscape contractor. Protocols for site access

and construction staging are the responsibility of the site owner or his designated site manager.

Trees and Shrubs

Selection: Trees and shrubs, when properly selected, are low-maintenance plantings that stabilize adjacent soils, moderate the adjacent air and ground temperatures, filter air pollutants, and serve as a barrier to wind. Some desirable characteristics to consider in selecting species for trees and shrubs include vigor, potential size and shape, tolerance to man-made environment, adaptability, climate, wildlife habitat, etc.

Sites for new plantings should be evaluated for prior land use, potential for soil contamination, adverse soil conditions such as poor drainage or acidity, exposure to wind, temperature extremes, location of utilities or pavement, and proximity to traffic,

Transplanting: In general, autumn is the preferred time for transplanting small trees. Evergreen trees can also be transplanted in spring. Seedlings (although not usually specified for an urban setting) can generally be planted in the early spring or early autumn to take advantage of moderate temperatures. Proper transplanting for a tree or shrub includes the conservation of as much of the root system as possible. Soil adhering to the roots should be damp when the tree is dug, and kept moist until replanting. The soil ball should be 12 inches in diameter for each inch of diameter of the trunk. Most transplanted trees and shrubs will need artificial support to prevent excessive swaying. Soil around the tree should be thoroughly watered after the tree is set in place, and then watered deeply once a week during summer and dry periods. Mulching at the base of a tree or shrub is helpful in preventing roots from drying out.

Vines and Ground Covers

Selection: Vines and ground covers can quickly spread and stabilize a slope, preventing erosion from occurring. Vine and ground covers come in many types, colors, and growth habits. Some vines and ground covers are suitable only as part of a small well-maintained landscape area, while others can stabilize large areas with little maintenance. Flowers do not provide erosion control but may be planted to add color and beauty. Vines and ground covers provide food and habitat for many types of wildlife.

Site Preparation: Ground covers are plants that naturally grow very close together, which may create competition for space, nutrients, and water. Soil for ground covers should be well prepared. The entire area should be spaded, disked, or rototilled to a depth of 6 inches. Approximately 2 to 3 inches of organic material, such as good topsoil or peat, should be spread over the entire area.

General Planting Guidelines

The following general steps will help ensure good plant growth:

1. Position the plantings to follow the contours of the land, taking into account drainage patterns and the potential for heavy winds.

2. Dig the holes approximately 1/3 larger than the plant root ball.

3. Use good topsoil or soil mixture with a lot of organic matter. Fill hole approximately ¼ full and gently shake plants to settle soil among roots.

4. Leave a saucer-shaped depression around the plant to hold water. Use mulch to protect the soil from erosion and to retain soil moisture.

5. Water thoroughly and regularly. Stake and support trees or other vegetation as necessary until root systems are capable of firmly infiltrating the subgrade.

Figures ES-10-1 and ES-10-2 show a typical details for planting a shrub or vine and also for planting a tree (balled and burlapped). Plants grown in containers are handled in a similar manner. Acclimate plants to outdoor conditions prior to transplanting.

The importance of properly supporting and staking a tree or shrub cannot be overemphasized. Although some trees may take root after a few months, other trees may need to be supported for a couple years. Therefore use proper materials and methods that will both remain functional and look attractive.

Maintenance

- Water trees regularly once a week, particularly during summer months or dry periods. Young trees should receive an inch of water each week for the first two years after planting. Fertilizing may be required for some types of trees and shrubs, in late autumn or early spring. Mulch applied to the base of a tree will help to reduce weeds and retain soil moisture.

- Proper pruning, watering, and application of fertilizer is necessary to maintain healthy and vigorous shrubs. A heavy layer of mulch applied around the shrubs reduces weeds and increases the retention of soil moisture.

- Vines and ground covers will require pruning and watering during the summer months. Vines and ground covers may not provide sufficient erosion control during winter months.

- Trees and shrubs with thin bark may require additional protection from insects and small animals. Spraying may be necessary for some types of

trees and shrubs. Repair wounds and abrasions by either tree paint or by removing limbs. Consult an arborist or horticulturist as necessary for the care of trees or shrubs.

Limitations

- If the site is susceptible to erosion, additional control measures may be necessary during the establishment of vegetation. Caution should be exercised in selecting non-native vegetation because of potential impacts to native vegetation on adjacent lands. Non-native species may quickly spread and compete with originally undisturbed vegetation.

- Overapplication of fertilizers, herbicides, and pesticides may create storm water pollution. Follow the guidelines in AM-13, Pesticides, Herbicides, and Fertilizer Use to prevent misuse of these materials. Follow package instructions carefully.

- Construction activities are likely to injure or kill trees unless adequate protective measures are taken. Direct contact by equipment is the most obvious problem, but damage is also caused by root stress from filling, excavation, or compacting soil near trees. Follow guidelines in AM-03, Preservation of Existing Vegetation.

References

8, 30, 33, 34, 35, 43, 63, 114, 125, 135, 136, 141, 144 (see BMP Manual Chapter 10 for list)

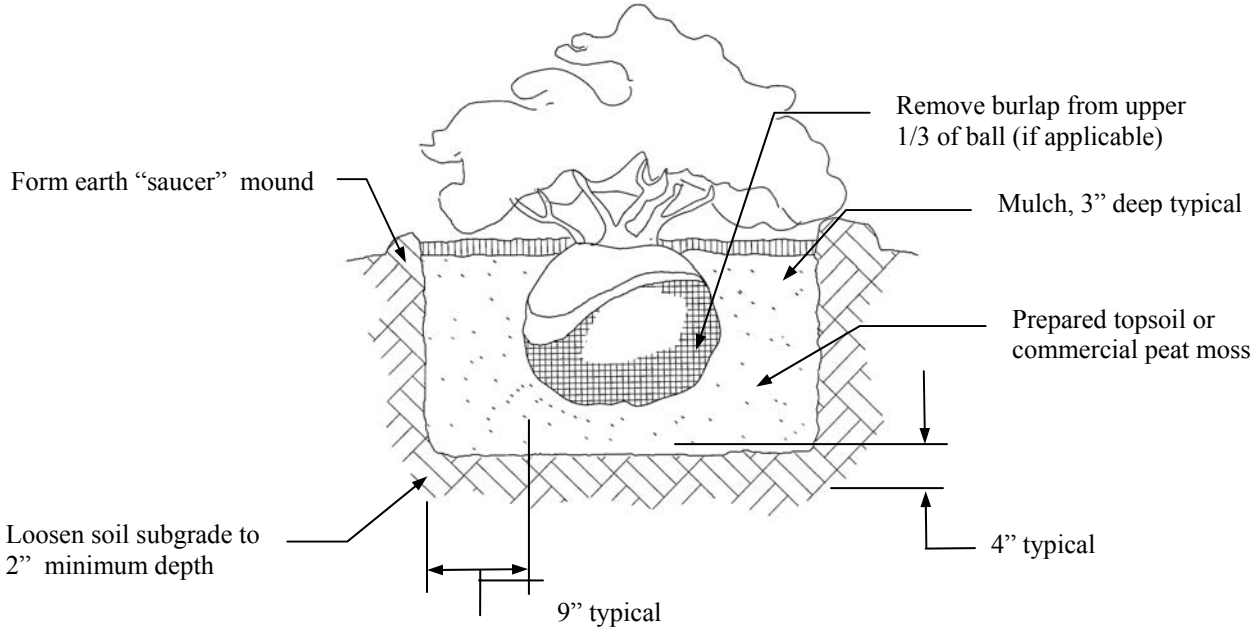

Notes:

1. Balled-and-bur lapped (B&B) stock from nurseries shall meet the standards of American National Standards Institute Z60.1, American Standard for Nursery Stock.
2. Young deciduous trees may be wrapped from the base of the tree to the height of the lowest branches. Wrap shall consist of 4-inch-wide rolls of bituminous impregnated tape that is specially manufactured to resist insects.
3. Alternative materials for staking trees include common garden hose, sliced open and fitted around trunk, and galvanized wire, 12-gauge or thicker.

Figure ES-10-1
Typical Planting Detail — Shrub or Vine

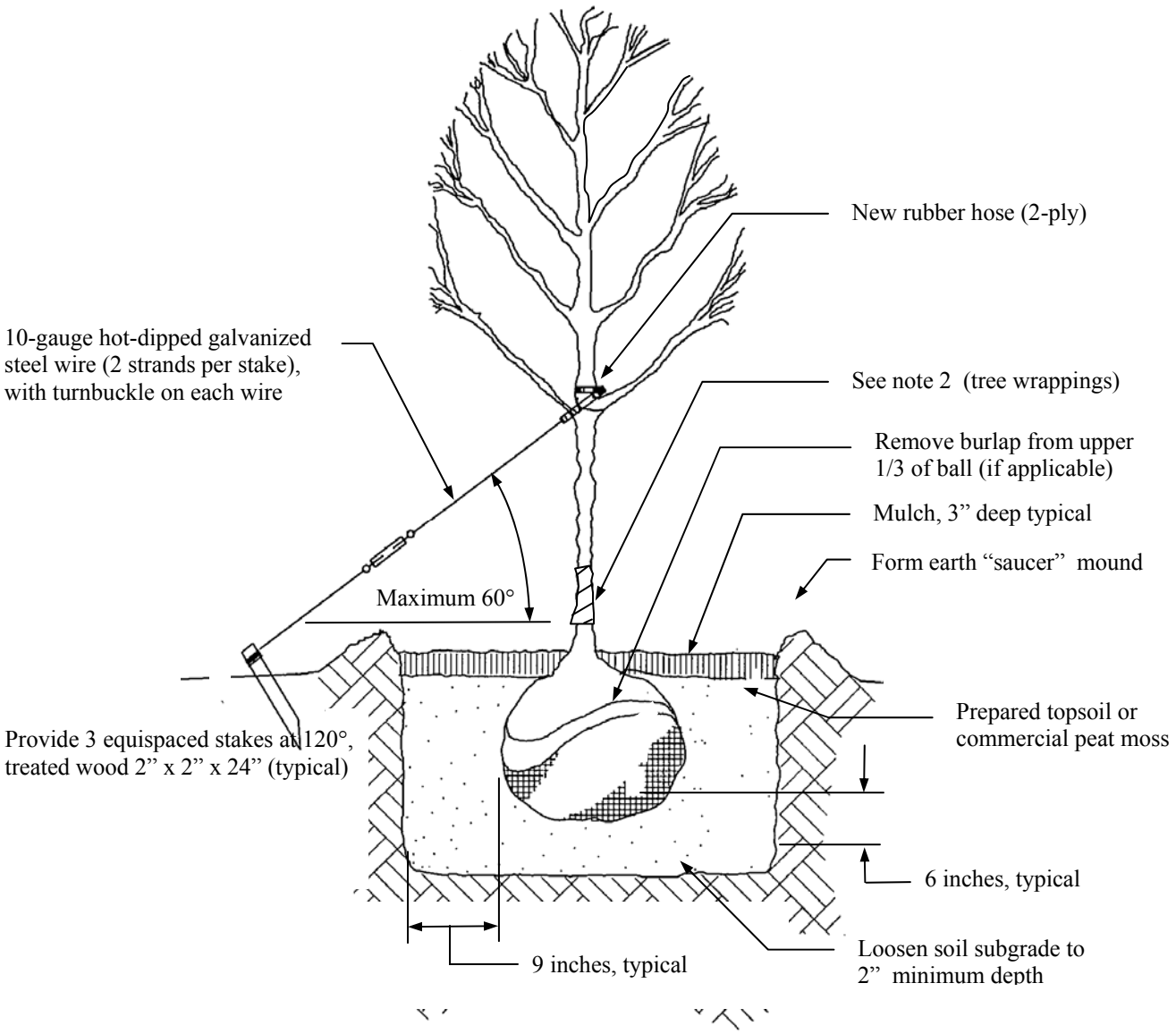

Figure ES-10-2
Typical Planting Detail — Tree

TABLE ES-10-1
APPROVED PLANT LIST

(From Memphis and Shelby County Code, Zoning Appendix A, Chapter 32, Landscape and Screening Regulations) The following listings are suggested tree species, generally preferred for survival and adaptability to the urban environment. An asterisk (*) means that the tree is evergreen.

TREE A. TREES OVER 50' TALL
TABLE INSET:

Common Name	Botanical Name	Growth Rate	Recommended Cultivars
Norway Maple	*Acer platanoides*	Moderate	"Cleveland," "Summer Shade"
Red Maple (N)	*Acer rubrum*	Fast	"Autumn Flame," "Tilford," "Red"
Katsura Tree*	*Cercidiphyllum japonicum*	Fast	
Seedless Green Ash (N)	*Fraxinus pennsylvanica lanceolata*	Fast	"Marshall's Seedless," "Newport," "Summit"
Ginkgo (Male)	*Ginkgo biloba*	Slow	"Autumn Gold," "Lakeview," "Mayfield"
Kentucky Coffee Tree (N)	*Gymnocladus dioicus*	Moderate	
Tulip Poplar* (N)	*Liriodendron tulipifera*	Fast	
Sycamore* (N)	*Platanus occidentalis*	Fast	
London Planetree	*Platanus x acerifolia*	Moderate	
Sawtooth Oak	*Quercus acutissima*	Moderate	
Water Oak (N)	*Quercus nigra*	Moderate	
Willow Oak (N)	*Quercus phellos*	Moderate	
Red Oak (N)	*Quercus borealis*	Moderate	
Scarlett Oak (N)	*Quercus coccinea*	Fast	
Shumard Oak	*Quercus shumardii*		
Bald Cypress (N)	*Taxodium distichum*	Moderate	
Japanese Zelkova	*Zelkova serrata*	Fast	"Parkview," "Village Green"
Basswood (N)	*Tilia Americana*	Moderate	
Lacebark Elm	*Ulmus parvifolia*	Moderate	

* These large natives require space and need planting where dropping of leaves is not objectionable.
* Katsura Tree — use single trunk only.
Growth rate: slow — less than 1' per year; moderate — 1' to 2' per year; fast — more than 2' per year.
(N) denotes native tree.

TREE B. TRESS 30' to 50' TALL
TABLE INSET:

Common Name	Botanical Name	Growth Rate	Recommended Cultivars
Turkish Filbert	*Corylus colurna*	Moderate	
Thornless Honey Locust (N)	*Gleditsia triacanthos inermis*	Fast	"Skyline," "Shade-master," "Green-glory," "Moraine"
Black Gum (N)	*Nyssa sylvatica*	Slow	
Japanese Pagoda Tree	*Sophora japonica*	Fast	
Little-Leaf Linden	*Tilia cordata*	Moderate	"Greenspire"
Silver Linden	*Tilia tomentosa*	Moderate	

Growth rate: slow — less than 1' per year; moderate — 1' to 2' per year; fast — more than 2' per year.
(N) denotes native tree.

TREE C. TREES LESS THAN 30' TALL
TABLE INSET:

Common Name	Botanical Name	Growth Rate	Recommended Cultivars
Trident Maple	*Acer buergerianum*	Slow	
Ironwood (American Hornbeam) (N)	*Carpinus caroliniana*	Slow	
Thornless Cockspur Hawthorn	*Crataegus crusgalli inermis*	Moderate	
Washington Hawthorn (N)	*Crataegus phaenopyrum*	Moderate	"Clark"
Winter King Hawthorn	*Crataegus viridis*	Moderate	
Goldenrain Tree	*Koelreuteria paniculata*	Moderate	
Crape Myrtle	*Lagerstroemia indica*	Fast	"Cherokee," "Muskogee," "Potomac," "Natchez"
Hop Hornbeam (N)	*Ostrya virginiana*	Slow	
Persian Parrotia	*Parrotia persica*	Moderate	
Chinese Pistache	*Pistacia chinensis*	Moderate	
Sourwood* (N)	*Oxydendrum arboreum*	Slow	
Possumhaw Holly	*Ilex deciduous*	Moderate	

* Questionable street tree for urban street.
Growth rate: slow — less than 1' per year; moderate —1' to 2' per year; fast —more than 2' per year.
(N) denotes native trees.

TREE D. EVERGREEN TREES OVER 30' TALL (EVERGREEN TREES FOR SCREENING)
(VARIETY OF EVERGREEN TREES IS ENCOURAGED)
TABLE INSET:

Common Name	Botanical Name	Growth Rate	Effective Height
Eastern Red Cedar**	*Juniperus virginiana*	Moderate	40'-50'
Southern Magnolia (N)	*Magnolia grandiflora*	Slow	60'-80'
Austrian Pine	*Pinus nigra*	Moderate	50'-60'
Eastern White Pine (N)	*Pinus strobus*	Moderate	60'-80'
Scotch Pine	*Pinus sylvestris*	Fast	60'-90'
Japanese Black Pine	*Pinus thunbergii*	Moderate	30'-50'
Virginia (Scrub) Pine (N)	*Pinus virginiana*	Moderate	20'-40'

* Loses lower limbs — under plant.
** Easily transplanted, many cultivars, including "Canaerti," "Glauca."
Growth rate: slow — less than 1' per year; moderate — 1' to 2' per year; fast — more than 2' per year.
(N) denotes native tree.

TREE E. EVERGREEN TREES LESS THAN 30' TALL
TABLE INSET:

Common Name	Botanical Name	Growth Rate	Effective Height
Foster Holly #2	*Ilex opaca "Fosteri #2"*	Moderate	25'-30'
Savannah Holly	*Ilex opaca "Savannah"*	Moderate	25'-30'
Yaupon Holly	*Ilex vomitoria*	Moderate	12'-15'

Growth rate: slow — less than 1' per year; moderate — 1' to 2' per year; fast — more than 2' per year.

EVERGREEN
TABLE INSET:

Common Name	Botanical Name	Size	Remarks
Eastern Red Cedar	*Juniperus virginiana*	50'	Grows well in sun

NATIVE PLANTS — TREES AND SHRUBS FOR NATURALIZING IN A SUNNY LOCATION
TABLE INSET:

Common Name	Botanical Name	Size	Remarks
Sweet Gum	*Liquidambar styraciflua*	100'	Outstanding fall color
Oaks	*Quercus species*	60'	Naturally occurring throughout region
River Birch	*Betula nigra*	50'	Fast growth; tolerates shade and wet
Persimmon	*Diospyros virginiana*	50'	
Osage Orange	*Maclura pomifera*	40'	Plant close to produce thorny hedge; male plant preferred
Sassafras	*Sassafras albidum*	40'	Forms dense thicket; good sound barrier
Fringe Tree	*Chionanthus virginicus*	25'	
Rough Leaf Dogwood	*Cornus drummondii*	20'	Forms dense thicket
Chickasaw Plum	*Prunus angustifolia*	10'	
Smooth Sumac	*Rhus glabra*	10'	Fall colors
American Filbert	*Corylus Americana*	8'	Taller when found in natural habitat; forms dense thicket
Flameleaf Sumac	*Rhus copallina*	8'	Outstanding fall color
Coralberry	*Symphoricarpos orbiculatus*	5'	Attractive fruit; shade tolerant

NATIVE PLANTS — ORNAMENTAL SHRUBS FOR SHADE
TABLE INSET:

Common Name	Botanical Name	Size	Remarks
Sweet Shrub	*Calycanthus floridus*	8' to 10'	Clump forming; fragrant
Witch Hazel	*Hamamelis virginiana*	8' to 10'	Winter flowers
Oakleaf Hydrangea	*Hydrangea quercifolia*	6' to 8'	Showy summer flowers
Spice Bush	*Lindera benzoin*	4' to 6'	Spring flowers; fall colors; fragrant
American Beauty Berry	*Callicarpa americana*	4' to 6'	Freezes to ground in severe winters
Inkberry	*Ilex glabra*	4' to 6'	Evergreen
Native Azalea	Available species	4' to 6'	Needs strict attention to habitat requirements, then adapts well

ACTIVITY: Erosion Control Blankets and Mats	ES – 11

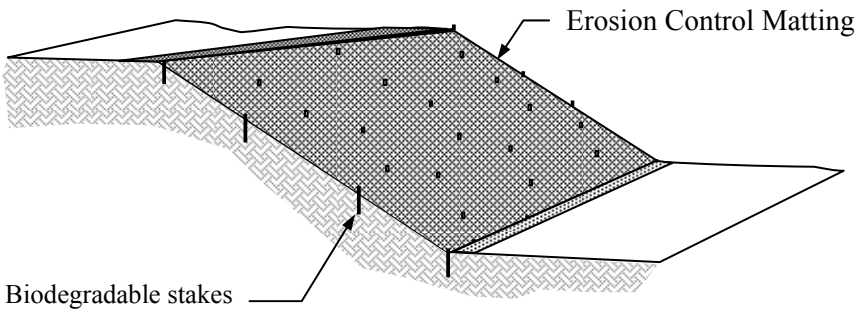

Targeted Constituents

● Significant Benefit ◗ Partial Benefit ○ Low or Unknown Benefit

● Sediment	○ Heavy Metals	○ Floatable Materials	○ Oxygen Demanding Substances	
○ Nutrients	○ Toxic Materials	○ Oil & Grease	○ Bacteria & Viruses	○ Construction Wastes

Description

Placing jute mesh, excelsior matting, or other lightweight erosion control mat will reduce erosion on previously graded and seeded swales, channels, slopes, or critical areas. Firmly anchor erosion control matting by means of trenching, anchor slots, stakes, or staples. This practice will create a significant reduction in sediment.

Applications

Erosion control matting can be used in any area subjected to erosive action for which permanent grass vegetation has been planted. Typical applications include: graded slopes, storm water channels, detention structures, stream banks, or swales.

Approach

Erosion control matting is a temporary slope stabilization measure that allows seeded vegetation to grow through the mat. Erosion control matting can also be used to stabilize storm water channels or other areas that are subject to occasional flowing water. See ES-12, Geotextiles, for areas which are normally underwater or which require permanent slope stabilization measures. Hydraulically applied mulch with a tackifier (as specified in ES-07) also functions similarly to an erosion control matting for shorter time periods, and could be specified as an alternative. If the slope is subject to slumping, groundwater, or structural failure, then consult ES-04, Gradient Terraces.

Erosion control matting generally consists of a biodegradable plastic net with some form of organic material such as straw, wood shavings, or coconut fiber. The overall purpose of the matting is to protect the soil and seeds from raindrop impact or from surface water runoff, while allowing air and sunlight to pass through the matting to the underlying vegetation.

The biodegradable net is manufactured as a very thin plastic mesh (polypropylene) that does not contain any chemicals to resist deterioration from the natural ultraviolet sunlight. The net biodegrades

naturally within a year or two, by which time a thick healthy stand of vegetation should be established. Principal functions of the biodegradable net are to:

— Contain the organic matting from blowing or washing away.
— Allow easy transportation and installation of the product.

The areas to receive the erosion control matting should be previously shaped, fertilized, and seeded. A smooth surface, free of depressions and eroded areas, is necessary to prevent water from flowing underneath the matting edges, especially on the uphill side.

Materials

Numerous types of erosion control matting currently exist on the marketplace. A few basic types will be described using terminology in TDOT Standard Specifications for Road and Bridge Construction (reference 172). Erosion control products should always be installed in accordance with the manufacturer's instructions; typical generic installation procedures are given in Figure ES-11-1. The basic types of lightweight erosion control mats for gentle slope applications are:

- Straw Blanket: Straw shall consist of clean, weed-free, harvested straw with an average length of at least 6 inches. The typical roll will be 4 to 12 feet wide and have a minimum dry weight of approximately 0.5 pounds per square yard.

- Excelsior Blanket: Excelsior (shaved wood fibers) shall generally be curled with at least 80% of fibers having a minimum length of 6 inches. A typical roll will be 4 to 12 feet wide and have a minimum dry weight of 0.8 pounds per square yard.

- Jute Mesh: Jute mesh consists of woven root fiber or yarn, with regularly spaced openings between strands. A typical jute mesh will weigh approximately 1.0 pounds per square yard for basic slope applications.

Coconut fiber can also be specified as part of an erosion control mat. Other types of biodegradable products can also be used. Most erosion control mats also contain thin thread to keep the materials within the plastic netting. An approximate rule of thumb is that a one-sided blanket lasts for one year and a two-sided blanket lasts for two years.

Several common manufacturers have different gradations of product in order to meet different needs, including blankets with various amounts of seeding, fertilizer, etc., already within the blanket itself. Erosion control blankets also come in different colors, with a green blanket being very popular for aesthetic reasons.

There are a wide variety of ways to fasten an erosion control mat. Trenching and cutoff slots are used to anchor the mat, but additional fasteners are usually needed.

It is highly recommended that biodegradable materials and methods should be used to install a temporary product such as erosion control matting.

Basic materials for anchoring erosion control mats are:

- Metal Staples: Metal U-shaped wire staples are commonly used in conjunction with a staple gun as a quick way to install anchoring. Typical staples are 6" to 10" deep, with a 1" width to hold down the erosion control mat. Staples are generally 10-gauge or 11-gauge.

- Wooden Stakes: Stakes should be made from sound pieces of wood, at least 1" wide, and typically sawn into a triangular shape. Wooden stakes are usually 12" to 18" in length, depending on the type of soil.

- Biodegradable Stakes: Biodegradable stakes are made of plastic or other materials that will degrade naturally in a few years. Choose biodegradable stakes with projected life as recommended by the manufacturer. Plastic stakes are specifically made to hold erosion control matting and are generally more effective than wood stakes.

Installation

Erosion control fabrics vary widely and must be installed per manufacturer recommendations. In general, erosion control and fabrics may generally be applied perpendicular or horizontal to the contour lines depending upon slope characteristics and the roll width. Place erosion control mats in direction of water flow for ditch installation, working upstream. Trim matting as necessary to fit the area to be covered. Use large pieces whenever possible and discard small pieces. The following guidelines are suggested for orientation:

- Erosion control matting should be placed horizontal (with contours):

  - On slopes that are less than 2:1 (H:V) and less than 20 feet long.
  - In situations where one width of the fabric roll will cover entire length.

- Erosion control matting should be placed perpendicular (downhill):

  - On slopes steeper than 2:1 (H:V) or on slopes longer than 20 feet.
  - If the downhill length of the slope exceeds the width.
  - On slopes with runoff from adjacent areas regardless of length or steepness.

Site Preparation

Proper site preparation is essential to ensure complete contact with subgrade. Grade and shape the installation area, removing all rocks, clods, vegetation, or other obstructions. Prepare subgrade by loosening at least 2 inches of topsoil beneath erosion control matting installation. Incorporate topsoil amendments as necessary, such as lime and fertilizer, according to soil tests and manufacturer recommendations.

Delivery and Storage

Deliver erosion control matting to the application site in rolls that are wrapped with protective coverings to prevent damage from mud, dirt, dust, and debris. Inspect materials to ensure that they are free of defects or flaws. Store materials above the ground surface and away from potential storm water contact. Protect materials from direct sunlight and from extreme hot or cold temperatures.

Slopes

- Excavate anchor trench at the top and bottom of each slope. The anchor trench should be at least 6 inches deep and 6 inches wide, or as recommended by the manufacturer for the specific application. The top anchor trench should be placed at least 1 foot past the top of slope.

- The erosion control mat should be tucked into the top trench, stapled, or staked, and then covered with topsoil. The mat is then unrolled downhill and stapled as the work proceeds. The mat should be allowed to lie smoothly and loosely on the surface. Do not stretch or twist the erosion control matting.

- For horizontal applications (involving short or gentle slopes), work must proceed from the bottom toward the top of the slope with a minimum 4-inch overlap. After cutting or trimming each end, the material should be folded under by 3 to 4 inches, stapled or staked, and then covered with topsoil.

- Staples or stakes should generally be placed 12 inches apart within anchor trenches and along horizontal overlapping joints. Interior staples or stakes should be placed in the pattern recommended by the mat manufacturer. Extra staples or stakes should be used for drainage channels, particularly near culverts and flumes.

- Slopes flatter than 4:1 (H:V) may have a typical staple or stake spacing of 5 feet apart on all edges and 1 foot apart at all joints and

ends. On all slopes steeper than 4:1 (H:V) and in all ditches, a typical installation pattern is three staggered rows spaced 3 feet apart. Follow manufacturer's recommendations for spacing and materials.

- Check slots should be spaced at not more than 50 feet from an end slot or another check slot. Check slots should be placed with a tight fold of matting anchored 6 inches vertically into the ground and 6 inches across, then tamped firmly.

Ditches and Channels

- Matting should be unrolled from the downstream end headed toward the upstream direction of flow. In general, the mat should be installed to minimize the number of seams and joints in the channel, with edges and ends above the bottom invert of the ditch. This may require a wider roll of erosion control mat to be purchased, especially for ditches.

- Anchor ditches are required on all four sides of the erosion control mat, in addition to staples or stakes. Anchor ditches within the channel or adjacent to culverts should have a transverse fold (as shown in Figure ES-11-1, third picture).

- When unrolled, fibers should be in contact with the soil and the netting should be on top (to prevent fibers from floating or washing away). Stakes or staples should be driven vertically into the ground, anchoring the mat firmly to the soil, and driven flush with the surface of the mat.

- Check slots should be spaced at not more than 50 feet from an end slot or another check slot. Check slots should be placed with a tight fold of matting anchored at least 6 inches vertically into the ground and 6 inches across, then tamped firmly.

The following items should be checked when inspecting the installation of erosion control mats:

- Uphill and downhill anchor slots should be installed at least 6 inches deep.
- Overlap by at least 3 inches or as recommended by manufacturer.
- Fasteners should be spaced and distributed evenly at correct density.

Maintenance

- Inspect erosion control mats weekly and after rainstorms to check for movement of topsoil, movement of the mulch, or erosion.

- Promptly repair or replace erosion control matting in the event of washout, breakage, or erosion damage. Repair ground surface with topsoil, replace mulch and fertilizer in addition to seed, and then install new netting.

Limitations

- Inadequate coverage or anchoring results in erosion, washout, and poor plant establishment. If appropriate anchor spacing is not applied, then seed, topsoil, and mulch may be lost to wind and storm water runoff.

- Do not install within a stream or drainage channel that carries water continuously. If the channel grade and liner are not appropriate for the runoff velocity, channel bottom erosion will result and vegetation will grow poorly.

References **30, 31, 32, 33, 34, 35, 139, 148, 172, 179**
(see BMP Manual Chapter 10 for list)

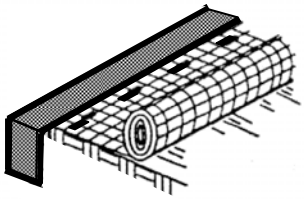

UPHILL ANCHOR SLOT:

Bury the uphill end of the mat within a trench at least 6” deep (12” deep for longer slopes). Tamp the soil firmly. Staple or stake at 12” intervals across the mat.

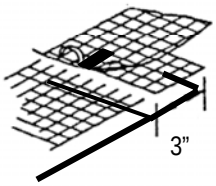

OVERLAP:

Overlap edges of the strips at least 3” (and preferably more for channels). Staple or stake every 12” down the center of the overlap.

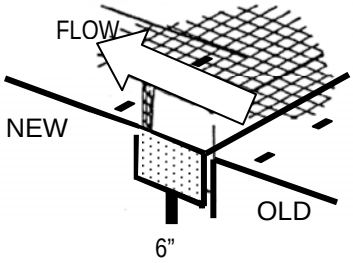

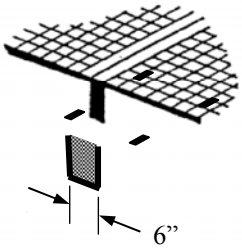

CHECK SLOTS:

Check slots should be made every 50 feet on slopes and intermittent drainage channels. Insert a fold of the mat into a 6” deep trench and tamp firmly. Staple or stake at 12” intervals across the mat. Lay mat smoothly on the surface of the soil. Do not stretch the mat and do not allow wrinkles.

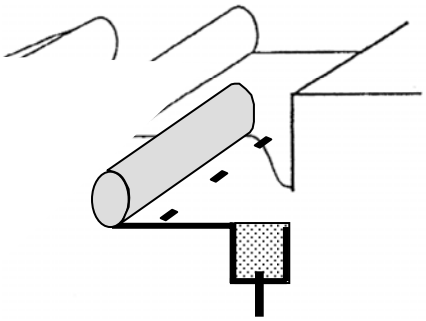

Figure ES-11-1
Typical Anchoring Details for Erosion Control Matting

ACTIVITY: Geotextiles	ES – 12

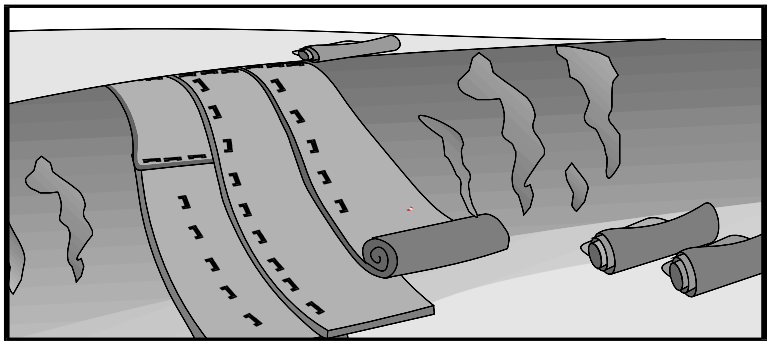

Targeted Constituents

● Significant Benefit ◗ Partial Benefit ○ Low or Unknown Benefit

● Sediment	○ Heavy Metals	○ Floatable Materials	○ Oxygen Demanding Substances	
○ Nutrients	○ Toxic Materials	○ Oil & Grease	○ Bacteria & Viruses	○ Construction Wastes

Description

Prevent or reduce the discharge of sediment as a result of construction activity by stabilizing soil, using a wide variety of geotextile materials and applications. Areas with current and potential erosion problems may also benefit from the installation of geotextiles. Geotextiles may also be used in conjunction with other construction methods or as part of a landscaped terrain to prevent potential erosion problems. This practice will create a significant reduction in sediment.

Suitable Applications

- Areas where disturbed soils must be stabilized on a construction project for which erosion control matting, hydraulic mulch and other methods are not appropriate.
- Slopes steeper than 2:1 (H:V), or where the erosion hazard is high.
- Critical areas, such as streams, wetlands, or other highly-valued resources needing protection.
- Channels intended to be vegetated or otherwise lined where the design flow exceeds the permissible velocity.

Overview

This BMP will include a discussion of various geotextiles used for typical construction projects and for erosion control applications. A related application is ES-11, Erosion Control Blankets and Mats, for temporary uses involving a thin plastic mesh to contain organic materials in establishing permanent vegetation growth.

Geotextiles have filtration and separation properties that directly contribute to erosion and sediment control. Other geotextile products, by virtue of streamlining or shortening the construction

process, contribute to erosion and sediment control in terms of reduced schedules or reduced excavations.

As a word of explanation, geotextiles are a particular type of geosynthetic material. Geosynthetic materials are made from long polymers of plastic substances such as polypropylene, polyethylene, polyvinyl chloride, and other types, usually created from petrochemical raw materials. Geosynthetics have unique properties that are used to replace traditional materials in the construction process. Geosynthetic liners are waterproof, chemically-resistant plastic sheets that are commonly used for landfills, stream channels, holding ponds, vapor barriers, etc.

Approach

A geotextile is not waterproof and generally has the appearance of cloth or fabric. There are two types, woven and nonwoven, indicating how the geotextile was made. Most applications can use either woven or nonwoven geotextiles; each type has its advantages and disadvantages. Some geotextile applications may affect slope stability, bearing strength, and settlement; these applications should be designed by a registered engineer in conjunction with product information from the geotextile manufacturer. Common applications are listed below; this BMP only discusses the first two items.

- Erosion Control: A geotextile can be installed on steep slopes or drainage channels as part of a permanent solution to sloughing soils or high flow velocities. Other types of geosynthetic materials, such as turf reinforcement mats or geocells, are briefly mentioned in this BMP as alternatives for controlling erosion.

- Sediment Control: A geotextile can be used as part of a silt fence, excavation dewatering system, sand filter, or outlet control structure to prevent sediment from leaving a construction site. The principal geotextile property would be the size of openings in the fabric.

- Subgrade Stabilization: A geotextile can be placed on subgrade to help bridge loads for traffic, buildings, or permanent structures. Can often be installed on muddy or soft soils as a first step in constructing a temporary access road.

- Protection or Cushion: A geotextile can act as a cushion during the construction process, to prevent impact damage, or as a barrier.

- Filtration or Drainage: A geotextile can separate two materials while still allowing water to drain in either direction. This property makes geotextiles highly desirable in the construction of subsurface drains, French drains, sand filters, retaining walls, streets and roadways, and buildings.

Definition of Terms

Geotextile Filtration: The property of a geotextile barrier that allows the passage of water while retaining the solid material on the uphill or upstream side of the barrier.

Geotextile Separation: The property of a geotextile barrier placed between dissimilar materials so that the integrity of both materials can remain intact or be improved.

Nonwoven Geotextile: Geotextiles made by extruding and spraying fibers onto a moving conveyor belt to form a continuous web, which is then joined by melt-bonding, resin-bonding, or needle punching.

Woven Geotextile: Geotextiles made by weaving polymeric threads on a loom.

Minimum Average Roll Value (MARV): The minimum average value of a representative number of tests made on selected rolls of a production lot, with a minimum of a 95% confidence level as determined statistically.

Geogrid or Geocell: A geosynthetic material to be placed at a stream or channel location where it can be filled with soil or rock, or where it can fill with sediment, so that the geosynthetic material can reinforce the soil against movement.

Fiber Roll: A roll of organic material, reinforced by plastic mesh or netting, installed to capture sediment on a slope or to prevent storm water from eroding a stream bank.

Factors for Material Selection

There are many types of geotextiles; selection of the appropriate type should be based on the desired need and site conditions. The following criteria should be considered in selecting a geotextile:

- Effectiveness (reducing erosion, slowing flow velocity, retaining soils)

- Engineering properties (strength, texture, weight, opening size)
- Acceptability (no environmental impacts, regulatory approval, aesthetics)
- Function (vegetation enhancement, safety, affect on wildlife)
- Maintenance (longevity, repair or replacement methods, inspection schedule)
- Costs (materials, transportation, preparation, installation, maintenance)

Geotextiles are commonly specified and categorized by weight, which allows a quick comparison on prices and performance. A lightweight geotextile typically weighs in the neighborhood of 4 to 6 ounces per square yard. A heavyweight geotextile may weigh as much as 16 ounces per square yard. However, always check properties and test values as reported on the vendor catalog or on the delivery sheet.

Geotextile properties are referenced to standards procedures or specifications by the American Society for Testing and Materials (ASTM). The chart below has commonly referenced properties to include a few methods of measuring strength. Geotextile producers monitor quality with onsite laboratories and independent third-party checks. Geotextiles are usually inert to common chemicals and hydrocarbons; they are also resistant to mildew, rot, insects, and rodents.

The following list contains a typical geotextile specification for use as a separator beneath riprap or aggregate linings in drainage channels. Assumptions include that riprap will be dumped carefully onto the fabric from a height of less than 5 feet, and for nonmuddy areas where the geotextile will not be driven on directly.

Typical Properties for Geotextile Underneath Riprap or Aggregate

Property	Typical values (MARV)
Tensile strength (grab)	200 pounds
UV degradation at 500 hours	70%
Puncture strength	80 pounds
Burst strength	180 pounds per squire inch
Trapezoidal tear strength	60 pounds
Weight	6 ounces per square yard
Apparent opening size	40 to 70 (U.S. sieve sizes)

Field joining should be accomplished by sewing for critical applications, such as flowing streams or steep slopes. A typical stitch density for nylon thread is 5 stitches per inch with either single-thread or double-thread stitching patterns.

Field joining for less critical applications may also be accomplished by overlapping and then using stakes or staples in the overlapped portions. The amount of overlap depends on the size and positioning of the stakes or staples.

Site Preparation

- Proper site preparation is essential to ensure complete contact of a geotextile with the subgrade. Grade and shape the installation area. Remove all rocks, clods, vegetation, or other obstructions.

- Prepare subgrade by loosening at least 2 inches of topsoil. Incorporate topsoil amendments as necessary, such as lime and fertilizer, according to soil tests, vegetation plan, and manufacturer's recommendations.

Delivery and Storage

- Deliver geotextiles to the application site in rolls that are wrapped with protective coverings to prevent damage from mud, dirt, dust, and debris. Inspect geotextiles to ensure that the materials are free of defects or flaws.

- Store geotextiles above the ground surface and away from potential storm water contact. Protect materials from direct sunlight and from extreme hot or cold temperatures. Limit exposure to sunlight to a few days; ultraviolet light degrades any geosynthetic material that does not contain carbon black additives. Do not allow mud and dirt to clog geotextile fabric, thus preventing filtration or drainage.

Installation of Geotextiles on Slopes or Drainage Channels

Consult manufacturer's written guidelines for installation. Typical methods and anchor guidelines are shown in Figures ES-12-1 and ES-12-2. Geotextiles are usually not difficult to handle, except that strong winds can create an uplift. Use temporary weights during placement of geotextile to prevent movement or damage. Field joining by sewing requires special equipment and expertise, so this method is not described.

Geotextiles that are to be placed permanently on long slopes or steep grades must be selected and designed by a registered engineer with appropriate experience and knowledge. Slope stability and slope failure analyses may be necessary to ensure that a geotextile will not be a potential problem, particularly in areas that could endanger people or property. Placing geotextile under a layer of soil generally creates a potential slope failure plane, which could be mitigated by terraces or structural measures.

- Install the geotextile in anchor trench at least 6 inches deep and 6 inches wide at the uphill location, or at the downstream location if in a channel. Backfill anchor trench and tamp earth firmly.

- Unroll blanket down the slope or in the upstream direction of water flow. Lay blankets loosely and maintain direct contact with the subgrade soil. Do not stretch or twist geotextile fabric. Overlap edges of adjacent parallel rolls by at least 3 inches and then stake or staple within the overlap.

- When blankets must be spliced, place blankets end over end (shingle style) with a minimum overlap of 6 inches. Install stakes or staples through overlapped area approximately 12 inches apart.

- Stake or staple geotextiles as recommended by the manufacturer for the specific application. Stagger stakes or staples rather than installing in a straight line. Use biodegradable materials whenever possible. Place initial lift of material carefully onto geotextile; avoid damage from heavy equipment blades, buckets, or tracks.

Fiber Rolls

Fiber rolls (or fiber logs) are very similar to erosion control matting, except that they come in a different shape. Fiber rolls are installed horizontally (along a level contour) to prevent sediment from moving downhill. Fiber rolls are also useful along a stream bank or channel to prevent damage from rising/falling water levels or from wave action. See Figure ES-12-3 for typical installation of fiber rolls or fiber logs.

Maximum spacing between rows of fiber rolls is usually 30 feet or less, depending on the slope. Typical fiber roll diameters range from 8 to 20 inches. Wood or metal stakes with a minimum length of 3 feet are needed at a typical spacing of 4 feet. The fiber roll should be entrenched into the slope or stream bank a minimum of 4 inches deep, so that it will act in the same manner as a straw bale.

Geocells and Turf Reinforcement Mats

A geocell or geogrid, while not considered to be a geotextile, is a type of geosynthetic product that is commonly used to stabilize channel crossings or stream banks. The geocell is usually a mat consisting of hexagonal cells, possibly 4 to 6 inches across and also 4 to 6 inches deep, from a relatively thick piece of geosynthetic material. The honeycombed cells are filled with either aggregate or soil; a filled geocell typically has enough strength to support vehicle traffic.

Consult the manufacturer's recommendations for installation of geocells or geogrids. The manufacturer will have design charts and anchor patterns based upon the application. These structures require careful installation prior to backfilling with soil and other materials.

Turf reinforcement mats (TRMs) are not considered to be geotextiles either; they are very similar to erosion control matting (discussed in ES-11) except with stronger geosynthetic materials. A common application for TRMs is in an area where sedimentation is likely to take place, such as at the bottom of slopes or in certain channel reaches.

Maintenance

- Installation of geotextiles shall be inspected after significant rainfalls to check for erosion and undermining. If washout or breakages occur, repair or replace geotextile immediately after repairing the damage to the slope or channel.

- Inspect fiber rolls whenever rain is forecast and perform required maintenance. Inspect fiber rolls following rainfall events and at least daily during prolonged rainfall. Repair or replace fiber rolls that are torn or unraveling.

Limitations

- Some slopes or channels may be difficult for heavy equipment to access, requiring substantial effort such as excavation and filling. Consider access needs early in the design phase and incorporate into design plans.

- Geotextiles may not be suitable in areas where vegetation will be mowed regularly (since stakes and netting can catch in mowers and other equipment).

References

30, 31, 32, 33, 34, 35, 141, 148, 172, 179 (see BMP Manual Chapter 10 for list)

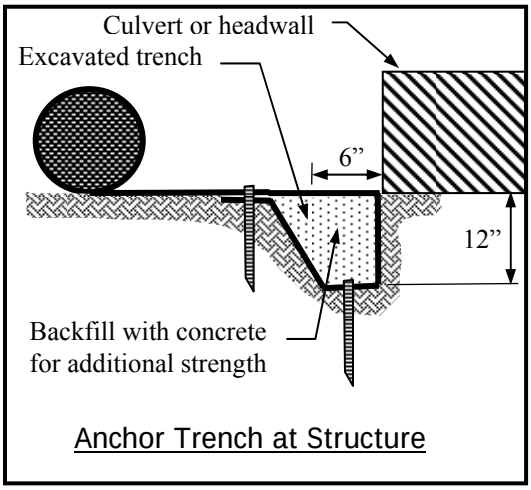

Anchor Trench at Structure

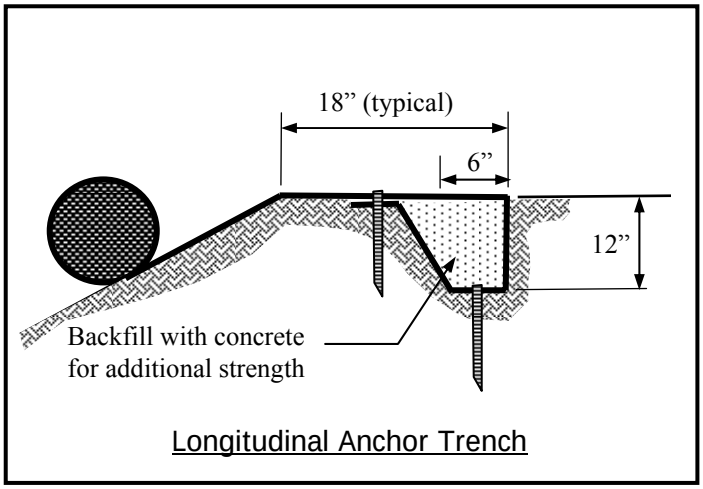

Longitudinal Anchor Trench

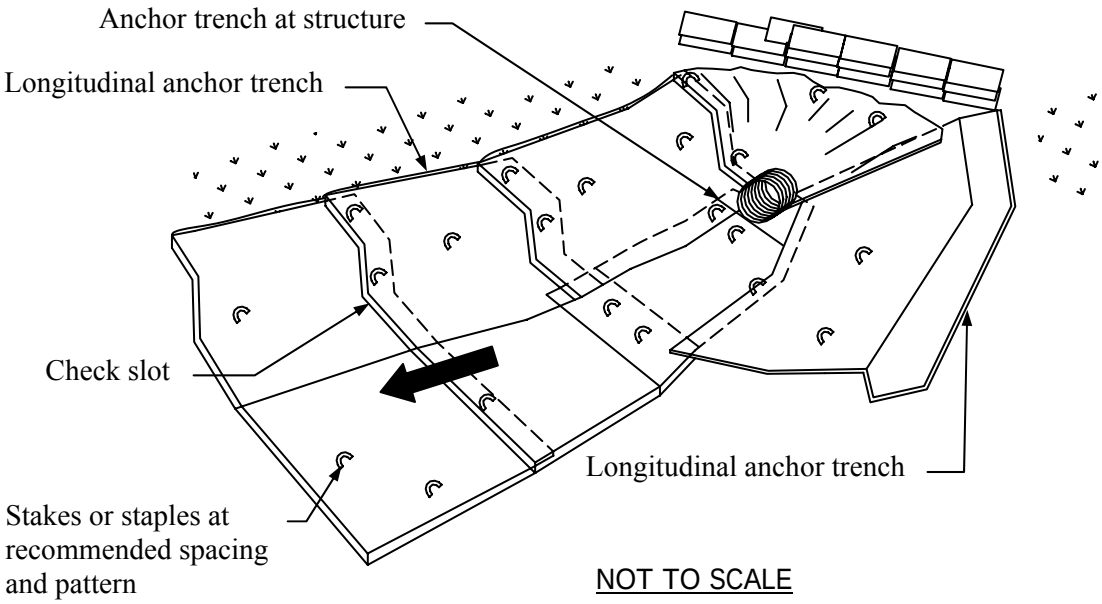

NOT TO SCALE

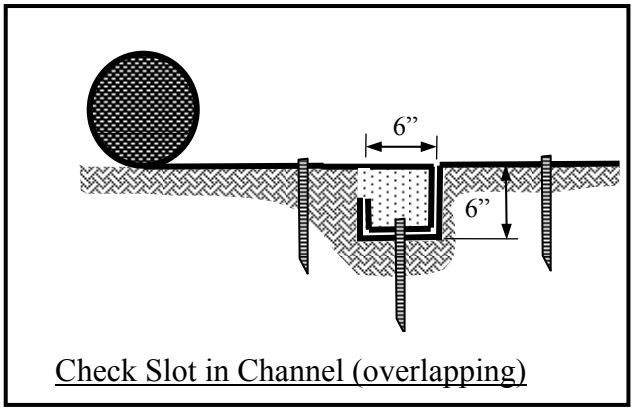

Check Slot in Channel (overlapping)

Notes:

1. Stitching geotextile seams is preferable to joints by overlapping. Consult a registered engineer for hydraulic and stability analyses for flowing streams and for steep grades.
2. Staking or stapling layout shall conform to manufacturer’s recommendations for flow and grades.

Figure ES-12-1
Anchoring Geotextiles in Channels

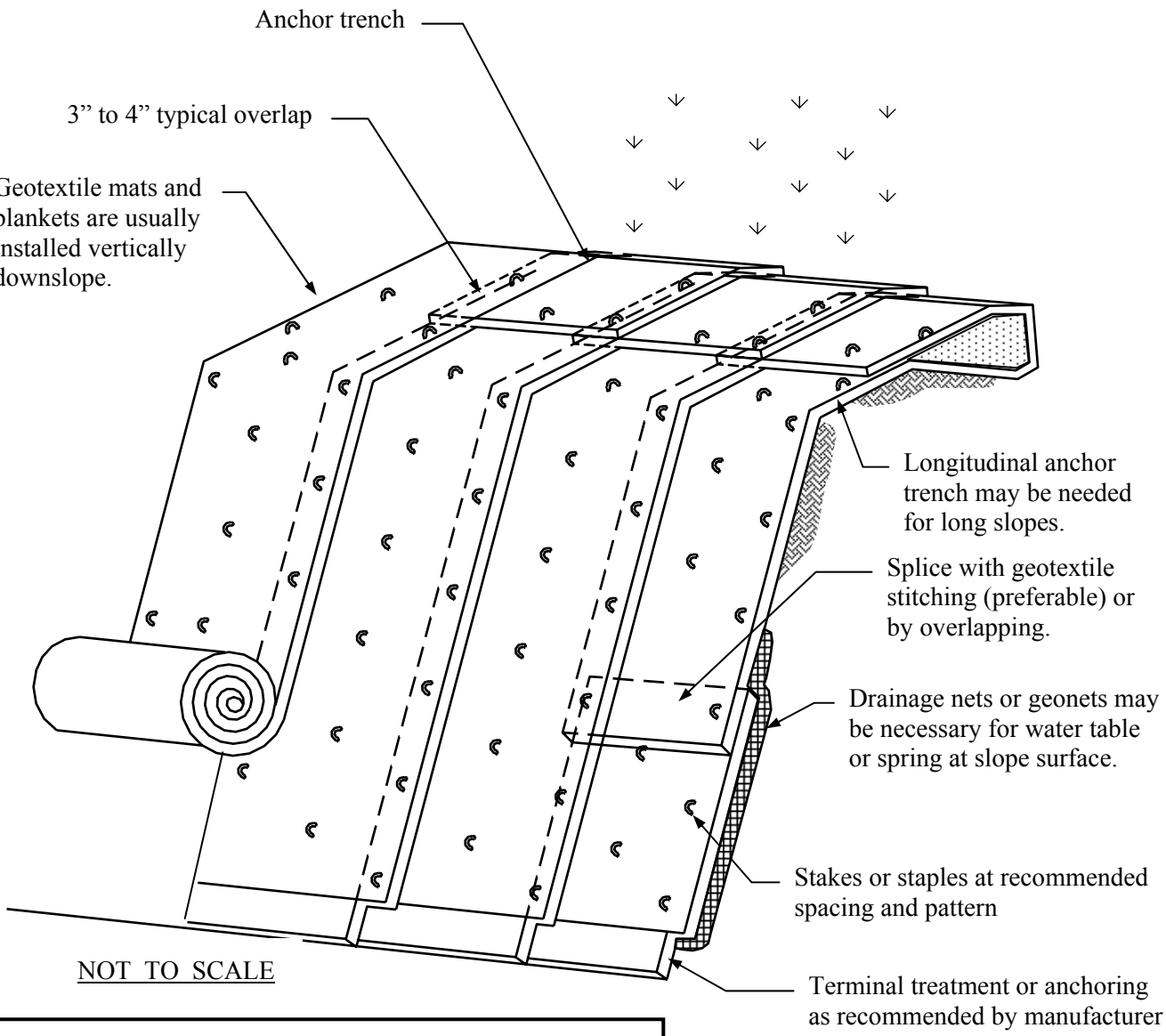

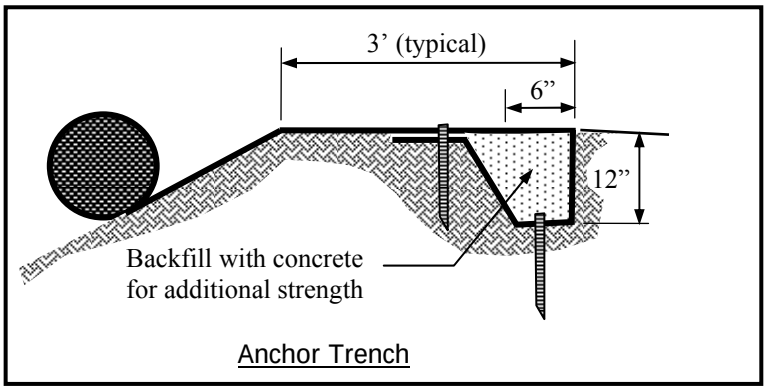

Notes:

1. Stitching geotextile seams is preferable to joints by overlapping. Consult a registered engineer for stability analysis of long grades or grades steeper than 3:1.
2. Staking or stapling layout shall conform to manufacturer’s recommendations for flow and grades.

Figure ES-12-2
Anchoring Geotextiles on Embankments

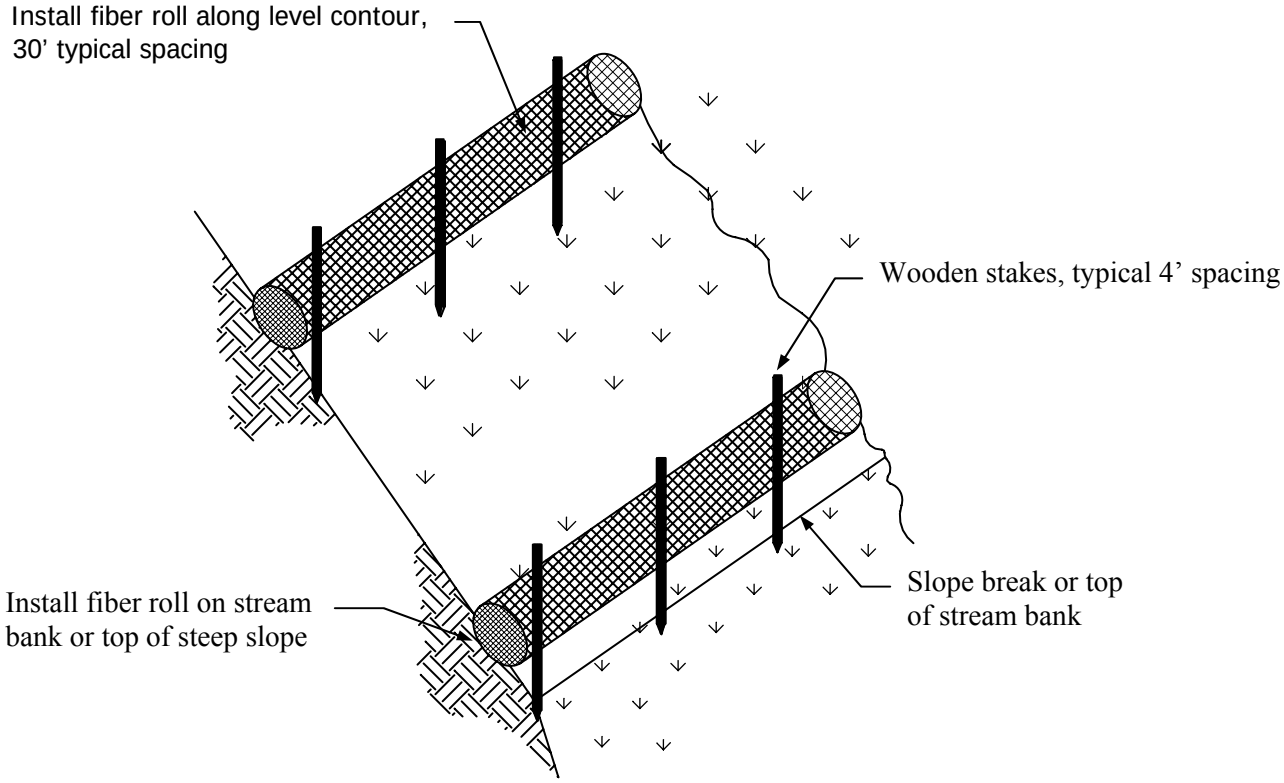

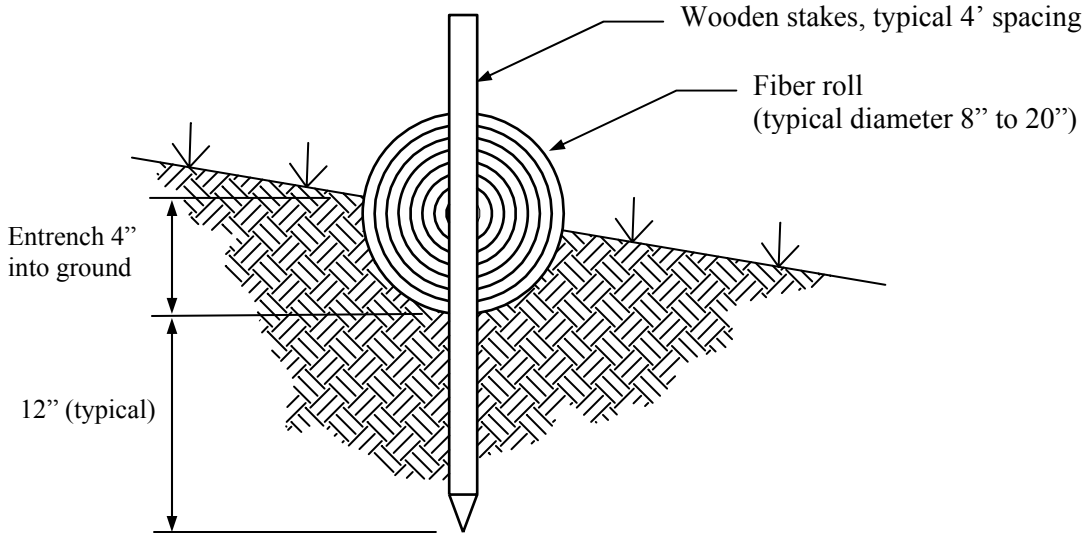

NOT TO SCALE

Figure ES-12-3
Fiber Roll Installation

ACTIVITY: Check Dams	ES – 13

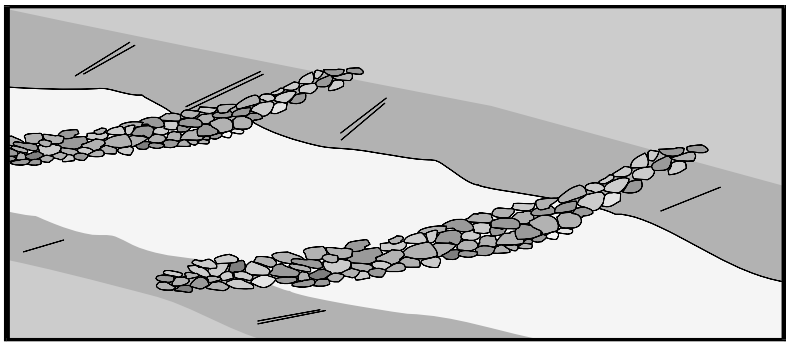

Targeted Constituents

● Significant Benefit ◗ Partial Benefit ○ Low or Unknown Benefit

● Sediment	○ Heavy Metals	○ Floatable Materials	○ Oxygen Demanding Substances	
○ Nutrients	○ Toxic Materials	○ Oil & Grease	○ Bacteria & Viruses	○ Construction Wastes

Description

Small temporary dams, constructed across a swale or drainage ditch, reduce the velocity of concentrated storm water flows. This reduces erosion of the swale or ditch, and also promotes sedimentation behind the dam. Check dams are usually constructed from large rocks or stones, but other materials can also be used. This practice is likely to create a significant reduction in sediment.

Suitable Applications

- Temporary erosion and sediment control in small open channels that typically drain 5 acres or less. A larger drainage area should be elevated by an engineer.
- During the establishment of permanent vegetation in drainage ditches or channels.
- On steep channels where storm water runoff velocities must be reduced.

Approach

Check dams are used to prevent erosion by reducing the velocity of channel flow in small drainage channels and swales. Check dams control sediment by allowing sediment to settle out above the check dam, and by allowing storm water to flow through a rock filter. Check dams are primarily used in small, steep channels where runoff velocities need to be reduced.

Check dams must be sized and constructed correctly and maintained properly, in order to prevent material from washing out. Check dams are usually constructed from large aggregate or riprap. Other materials may be used, such as fiber rolls or sandbags filled with gravel that can withstand the storm water flow velocities and forces. Do not use creosote railroad ties or telephone poles. Check dams in drainage channels are not usually constructed from straw bales or silt fences, since concentrated flows quickly wash out these materials.

Check dams should be placed at a distance and height to allow small pools 2 feet deep to form between each check dam. See typical spacing diagram in

Figure ES-13-1. Backwater from a downstream check dam should not exceed the toe of the upstream check dam. The center section of the dam should be lower than the edge sections so that the check dam will act like a weir during major floods. The dam must completely span the ditch or swale to prevent washout.

Since check dams are for temporary installation only, the designer or contractor should make provision for safe and expedient removal of check dams when no longer needed.

Rock Check Dam

Rock check dams are constructed from large aggregate (such as TDOT #1 or #2 with minimum stone size of ¾ inch) for small drainage areas up to 1 acre. Rock check dams can also be constructed from small riprap (such as TDOT Class A-1 with stone sizes from 2 to 15 inches) for drainage areas up to 5 acres, with an upstream layer of smaller aggregate for filtering. Rock can be placed by hand or by mechanical methods (no dumping of rock) to achieve complete ditch or swale coverage. Provide a minimum slope of 2:1 (H:V) on upstream and downstream faces, as shown in Figure ES-13-1.

Rock check dams may be keyed into the swale or channel bottom, typically a distance of 6 inches. Advantages of keying into the channel bottom are that the check dam will be more stable and less likely to slip or slide. A disadvantage of keying into the channel bottom is that the channel will have to be repaired and reshaped whenever the rock check dam is removed. Geotextile filter fabric should be placed beneath a rock check dam to assist in removal when the check dam is no longer needed.

Log Check Dam

Do not use creosote railroad ties or telephone poles; the creosote soaks into storm water to become a pollution source. Check dams built of natural logs or wood must be secured against floating away during floods; floating logs can be a source of significant damage to bridges and structures. Height and spacing should generally be less than for rock check dams. Log check dams are usually constructed of 4- to 6-inch diameter natural wood logs. Drive logs vertically into soil at least 18 inches, staked and tied together. A horizontal log, to reinforce the driven logs, is embedded into channel sides for increased stability. Provide overflow weir to prevent erosion to channel banks.

Sandbag Check Dam

Sandbags filled with either aggregate or sand may also be used as a check dam. Sandbags should be staked and tied together, after being placed in a staggered fashion. Provide overflow weir in the center of channel similar to check dam in Figure ES-13-1.

Maintenance

- Inspect for sediment buildup behind the check dam and signs of erosion around the check dam after each rain. Remove accumulated sediment whenever it reaches one-third of the upstream check dam height. Shovel by hand to prevent damage to the filter fabric and check dam. Dispose of accumulated sediment onsite in a manner that prevents additional movement of sediment.

Limitations

- Do not use this BMP for permanent placement without sufficient design for larger storms and additional controls for retaining rocks. Permanent placement must also include guaranteed provisions for sediment removal.

- Not to be used in live or continuously flowing streams. Generally not used in drainage channels that drain areas greater than 5 acres, but conditions may depend upon the channel slope and velocities versus the size of rock proposed.

- Installation and removal may damage vegetation and channel grades. Do not place in grass-lined channels unless erosion and sediment are expected. Check dams may kill vegetation by excessive sediment or by long periods of submergence.

References

8, 30, 31, 32, 33, 34, 35, 41, 114, 115, 136, 141, 144, 172, 179
(see BMP Manual Chapter 10 for list)

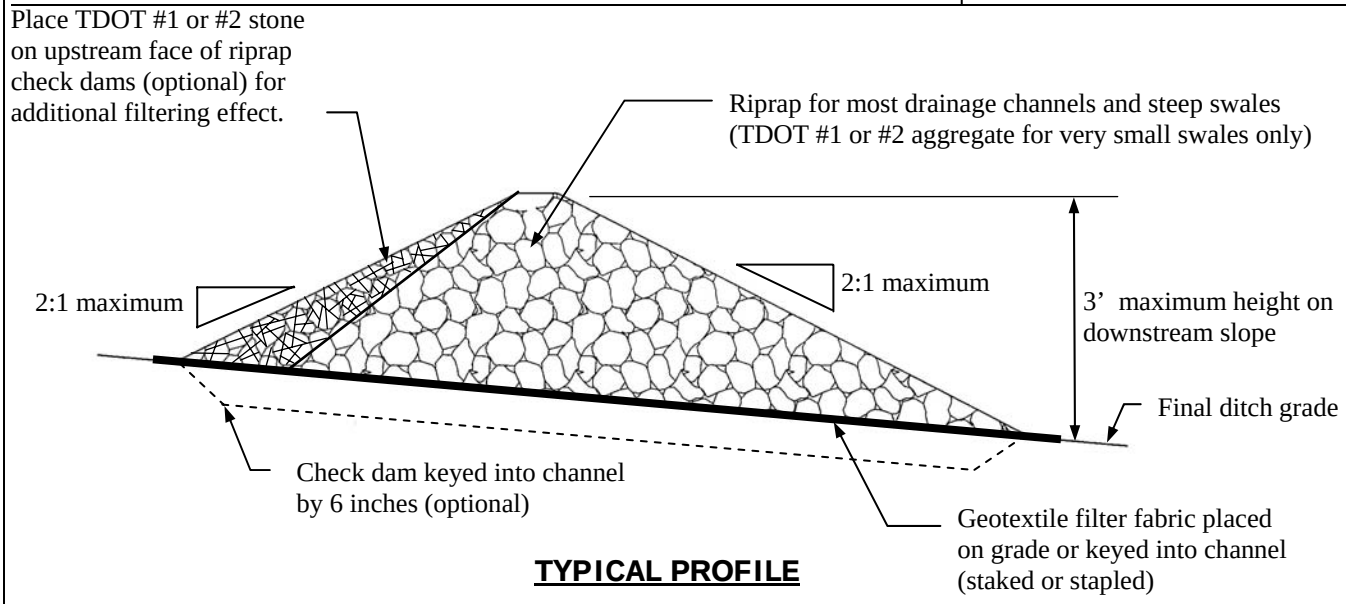

TYPICAL PROFILE

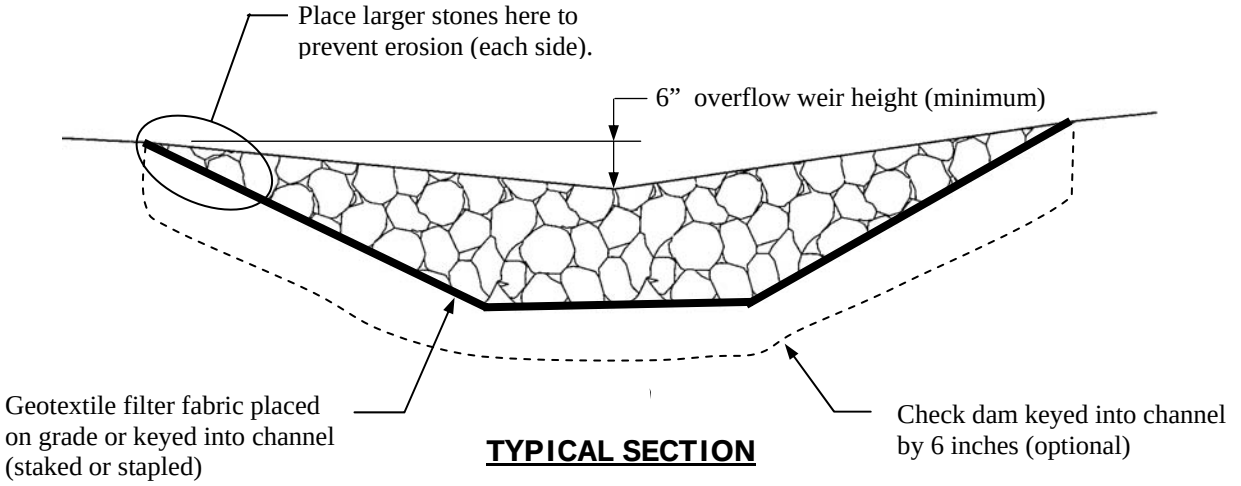

TYPICAL SECTION

NOT TO SCALE

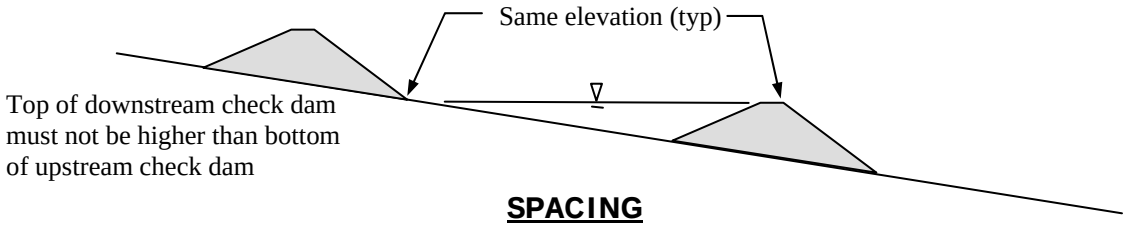

SPACING

Figure ES-13-1
Rock Check Dams

ACTIVITY: Silt Fence	ES – 14

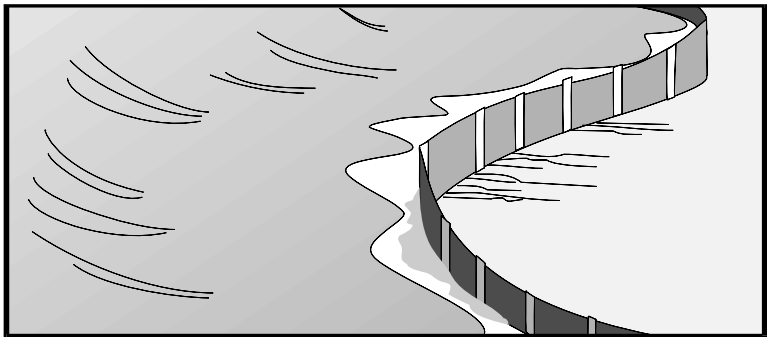

Targeted Constituents

● Significant Benefit ◗ Partial Benefit ○ Low or Unknown Benefit

● Sediment	○ Heavy Metals	○ Floatable Materials	○ Oxygen Demanding Substances	
○ Nutrients	○ Toxic Materials	○ Oil & Grease	○ Bacteria & Viruses	○ Construction Wastes

Description

A silt fence is a temporary filter fabric that is attached to supporting posts and entrenched into the ground. The silt fence intercepts small amounts of sediment from disturbed areas during construction operations. It is a fairly versatile tool that is used close to the erosion source or as a perimeter control. This practice is likely to create a significant reduction in sediment.

Suitable Applications

- At the bottom of a cleared slope or disturbed field.
- At the perimeter of disturbed construction areas.
- Along streams and ditches, or to protect sensitive areas.
- Around temporary soil or gravel stockpiles.
- Within a swale or ditch that has gentle slopes and drainage area less than 1 acre.

Approach

Silt fence is a well-known and common method for trapping sediment at or near the potential source of erosion. It also reduces the potential for overland sheet flow to concentrate into rills and gullies. Silt fence can be installed below slopes, along paved areas, in narrow buffer zones, along streams, and in many other locations without requiring vehicle access. Silt fence can be installed by hand or by using a small piece of trenching equipment. It is very dependable when used properly.

Silt fence must be designed and installed correctly to trap sediment. Silt fence is only meant to handle small quantities of storm water runoff such as sheet flow. Silt fence ponds water and then slowly releases it through the openings in the geotextile fabric. It is crucial that silt fences are sufficiently anchored and supported and that they follow the contours. Improperly

installed silt fence (not entrenched or not following contours) causes worse erosion by concentrating storm water runoff.

Silt fence is more effective in removing sediment than straw bale barriers. Silt fence is also more durable than straw bale barriers, requires less maintenance, and is often more cost-effective for most types of construction projects involving cleared land. Silt fence shall not be used in live or continuously-flowing streams. Silt fence can generally not be used in ditches or swales that drain areas greater than 1 acre. Do not use silt fence in steep ditches or swales where the design flow is greater than 2 feet per second.

A variation of silt fence in common use and manufactured by a few companies is a triangular-shaped structure with silt fence fabric on both sides. The triangular shape comes from a plastic or metal wire frame that provides continuous support similar to the wire reinforcement fabric described below. It requires a combination of staples and anchors to install the triangular silt fence. The outer edges of the triangular silt fence should be buried in a trench for most applications and then adequately stapled or staked. If necessary, a triangular silt fence can be installed with minimal or no trenching for short overland flows on gentle slopes. See Figure ES-14-2 for typical details.

A common variant of a reinforced silt fence (described below using wire reinforcement backing) is to use a staked straw bale barrier as the reinforcement backing for the silt fence. A combined trench can be excavated as the first step, and then both erosion control structures are installed in the normal manner, with the silt fence being upslope.

Materials

- Synthetic filter fabric is typically manufactured from woven or nonwoven sheets of polypropylene, nylon, or polyester. Silt fence fabric must contain stabilizers to slow degradation from ultraviolet light. Silt fence fabric should resist rotting, mildew, insects, and rodents.

- Burlap fabric is not appropriate for use as silt fence, except possibly temporary applications of less than 45 days at minor locations. Burlap fabric should be inspected more often and must be replaced every 60 days.

- Silt fence fabric comes in rolls with a typical width of 36 inches. For most applications, 12 inches will be embedded into the ground and 24 inches will be aboveground to trap sediment. Silt fence can be installed on either wood or steel posts of adequate strength.

- Typical values for silt fence fabric are listed in the table below. Some vendors offer a standard strength fabric and also an extra strength fabric for critical applications. For the flow rate of 0.30 gallons per minute per square foot, the silt fence fabric release rate is 0.07 cubic feet per second for every 100 feet of silt fence with ponded height of 1 foot.

Typical Properties for Silt Fence Fabric	
Property	**Typical Values (MARV)**
Tensile strength at 20% elongation:	
Standard strength fabric	50 pounds per linear inch
Extra strength fabric	100 pounds per linear inch
Burst strength	180 p per square inch
Trapezoidal tear strength	50 pounds
Apparent opening size	20 to 30 (U.S. sieve size)
Flow rate	0.30 gallons per minute per square foot

- Wood posts are typically 2” x 2” oak and other hard woods. A larger size post is necessary for pine and other soft woods, such as 4” x 4”. Typical post length is 48 inches, with minimum height of 24 inches aboveground and minimum depth of 18 inches below ground. See Figure ES-14-1 for typical post and trenching details.

- Fasteners for wood posts are typically either wire staples or nails. There shall be a minimum of 5 fasteners for each wood post. Use minimum size 17-gauge staples with a minimum embedded length of 1 inch into the wood and a minimum width of 3/4 inch across. Typical nail size is 1 inch long with an oversized nail head (such as 3/4-inch diameter head) to prevent fabric from ripping. Additional nails may be necessary if a small nail head is used.

- Steel posts are typically a C-shape, L-shape, T-shape, or U-shape with a minimum weight of 1.33 pounds per linear foot, with sufficient holes and hooks for fasteners. Typical fasteners for steel posts are either installed hog rings, attached loops of cord or string, or sewn pockets within the fabric.

- Steel wire reinforcement fabric may be necessary for installations within storm water channels or on steep slopes. Steel wire reinforcement shall be minimum 14-gauge with a maximum mesh spacing of 6 inches. Typical methods of attaching steel wire reinforcement are tie wires or hog rings.

Installation Guidelines

- The drainage area for a typical silt fence installation at the bottom of a slope shall not exceed 10,000 square feet for every 100 feet of silt fence. For a rectangular area, this means a maximum average slope length of 100 feet, which is only permissible for slopes flatter than 2 percent.

Maximum Slope Lengths for Silt Fence Installations	
Land Slope	**Maximum Slope Length**
Less than 2 %	100 feet
From 2 to 5 %	75 feet
From 5 to 10 %	50 feet
From 10 to 20 %	25 feet
More than 20 %	15 feet

- Do not staple silt fence fabric to existing trees because this does not allow adequate trenching and backfill near the tree trunk. Other erosion control methods may also be appropriate in areas where existing trees and vegetation are to be protected or where excavating a trench is not feasible.

- Silt fence fabric should be purchased in continuous rolls of acceptable width in order to avoid creating a joint (which would be the potential location of a blowout). When joints are unavoidable, install two support posts in close proximity to each other, and then overlap the two silt fence fabrics by one post in each direction.

- Locate silt fence at least 5 to 7 feet beyond the base of steep slopes. In locations at the bottom of a slope, turn the ends of the silt fence upslope so that a certain depth of storm water may be retained in front of the silt fence. The impounded depth should be at least 12 inches but less than the silt fence height. Install straw bale barriers at the end of the silt fence row as an "emergency overflow" to allow detained water to be filtered quickly. See Figure ES-14-3 for a typical layout using straw bales at the end of silt fence.

- If a silt fence is installed in a storm water ditch or swale, then steel wire reinforcement is highly recommended. Maximum post spacing shall be 4 feet or less. The silt fence should have the ends oriented upstream to resemble a horseshoe pattern, as shown in Figure ES-14-4.

Common problems with silt fence are:

- Not adequately entrenched into the ground.
- Installed too low, particularly at sag point between posts or as fabric stretches.
- Not installed on a level contour.

Installation Procedure

Step 1: Prepare the grade and alignment for the silt fence installation. Clear brush and reshape ground profile as necessary. Ensure that silt fence is installed along a level contour and that maximum slope lengths are not exceeded.

Step 2: Install wood or steel posts at proper spacing to a minimum depth of 18 inches. Maximum length for most installations is 8 feet between posts. Shorten maximum spacing to 6 feet when installing silt fence below steep slopes or 4 feet within a ditch or channel that drains less than 1 acre.

Step 3: Excavate a trench 12 inches deep and 6 inches wide slightly uphill from the posts. Keep excavated soil nearby for use in filling the trench.

Step 4: If necessary, attach wire fence reinforcement to posts at locations where washout or heavy flows may occur. Install wire fence reinforcement at least 3 inches into the trench and attach to posts. Wire fence reinforcement

should extend a few posts to draw adequate strength from the embedded posts.

Step 5: Install filter fabric into the trench and attach to the posts using recommended materials. Embed into trench as shown in Figure ES-14-1. The minimum height of silt fence shall be 18 inches above the ground surface. Attach filter fabric to the top edge of wire fence reinforcement (if needed) at regular intervals to prevent sagging.

Step 6: Backfill the trench using the excavated soil and firmly compact. Carefully inspect silt fence installation to see if additional supports or posts are needed.

Maintenance

- Inspect silt fence after each rainfall event and also weekly for damaged or loosened fabric, excessive sediment buildup, undercutting flows, or flows around end of silt fence. Repair or replace damaged silt fence as necessary.
- Remove accumulated sediment whenever it reaches one-third of the silt fence height. Shovel by hand to prevent damage to the filter fabric and posts. Dispose of accumulated sediment onsite to prevent movement of sediment.
- The expected life of silt fence fabric is usually six to eight months. Inspect silt fence often as the fabric weathers and deteriorates. Install new silt fence as needed to ensure proper erosion control.

Limitations

- Silt fence shall not be used in live or continuously flowing streams. Silt fence can generally not be used in channels that drain areas larger than 1 acre.
- Installation and removal may damage vegetation and channel grades. Do not place in grass-lined channels unless erosion and sediment are expected. Silt fence may kill vegetation by excessive sediment or by long periods of submergence.

References

8, 30, 31, 32, 33, 34, 35, 41, 114, 136, 141, 144, 162, 172, 179 (see BMP Manual Chapter 10 for list)

Notes:

1. Post spacing shall be 8 feet maximum for typical applications at the bottom of slopes or along site perimeter.

2. Post spacing shall be 6 feet maximum at the bottom of steep slopes. Post spacing shall be 4 feet maximum within a drainage channel.

3. Place silt fence at least 5 to 7 feet away from steep or long slopes to impound storm water runoff. See Figure ES-14-3.

4. Wire fence reinforcement is required below slopes that are over 8 feet high, or where silt fence is installed immediately adjacent to grading limits. Install reinforcement at locations where washout or heavy flow may occur.

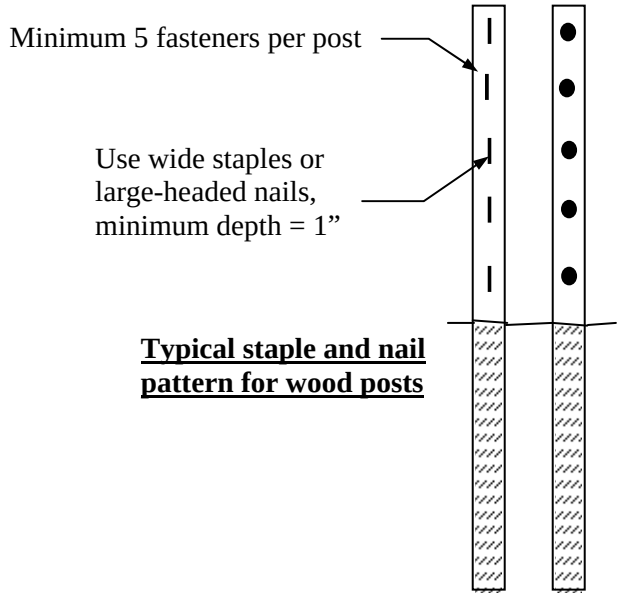

Typical staple and nail pattern for wood posts

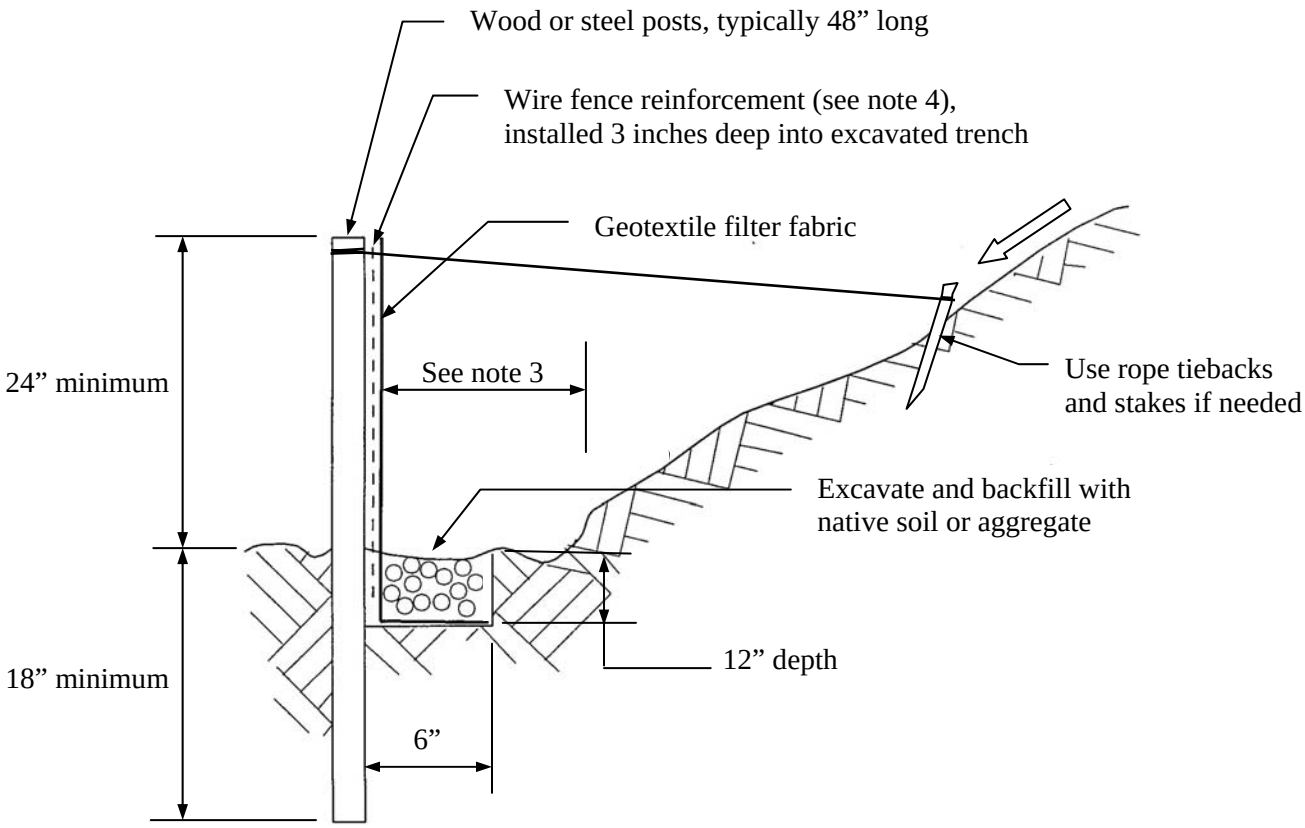

NOT TO SCALE

Figure ES-14-1
Typical Silt Fence Installation

Notes:

1. Two alternative installations are shown for a trenched geotextile fabric and for a geotextile fabric apron. Follow recommendations of manufacturer regarding staples and stakes. Stakes should typically be driven 18" into ground.

2. Typical height is 18" to 24".

Features of triangular silt fence include:

- Available as prefabricated units from several manufacturers in stackable form
- Triangular shape allows static water pressure to press the structure downward.
- The support frame is reusable.
- Can be adapted to many different uses.
- Trenching may not be necessary for minor overland flow applications if a geotextile fabric apron adheres closely to a prepared ground surface.

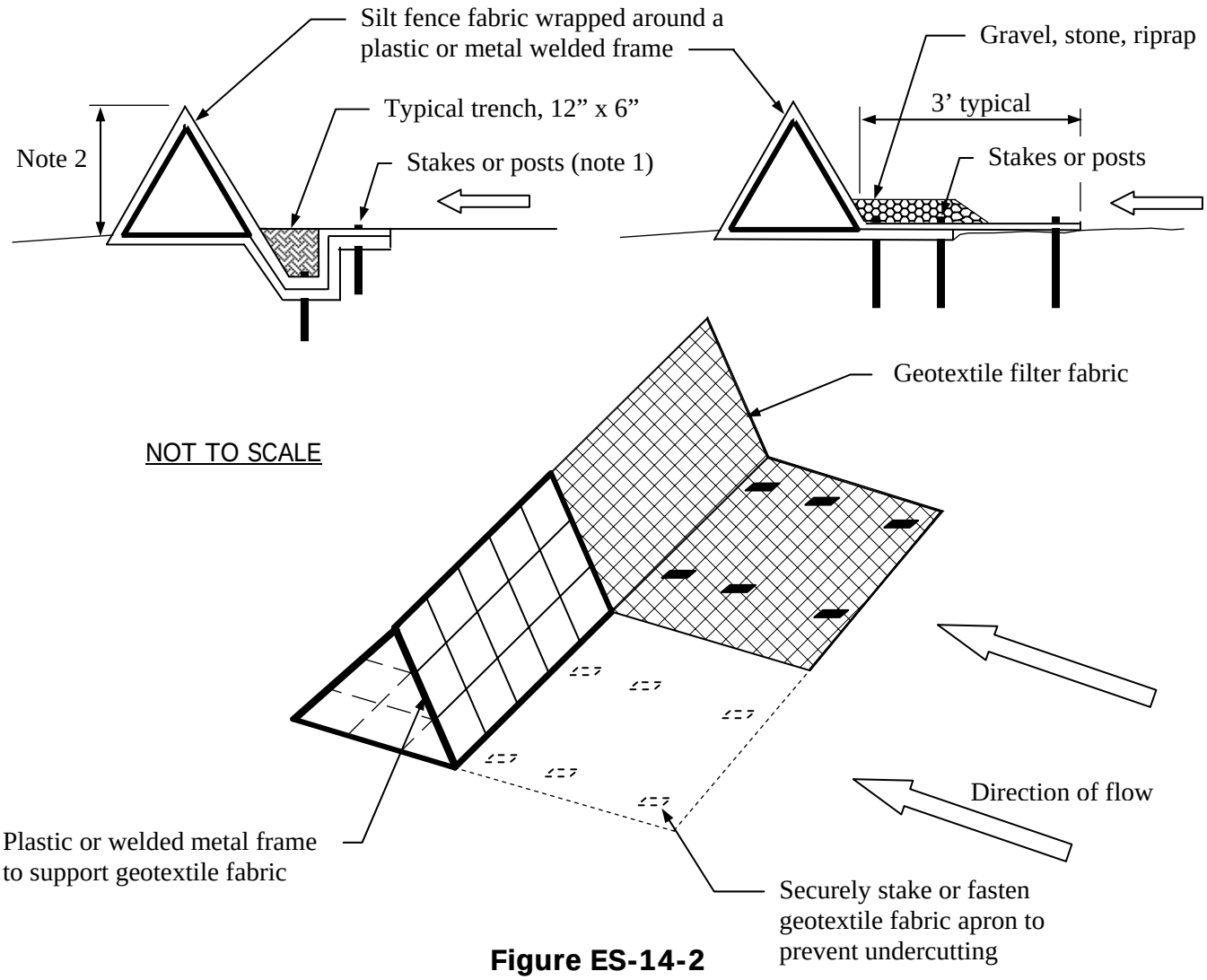

Figure ES-14-2
Triangular Silt Fence

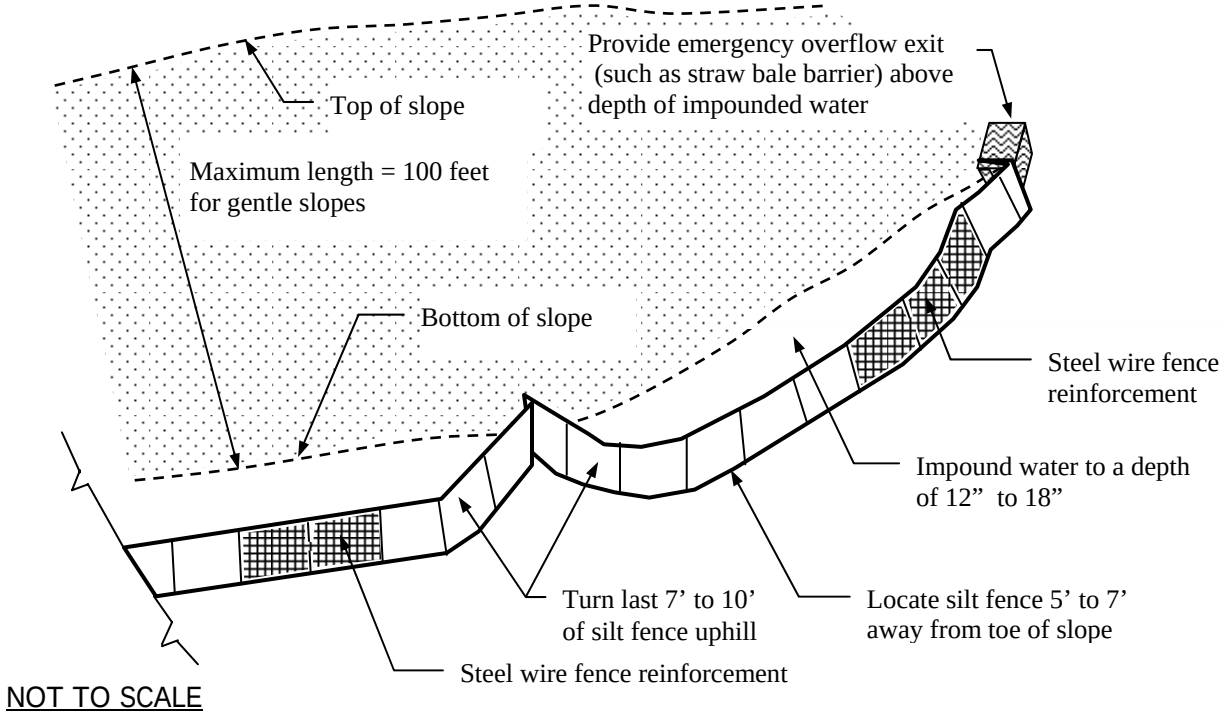

Figure ES-14-3
Silt Fence (Below a steep or long slope)

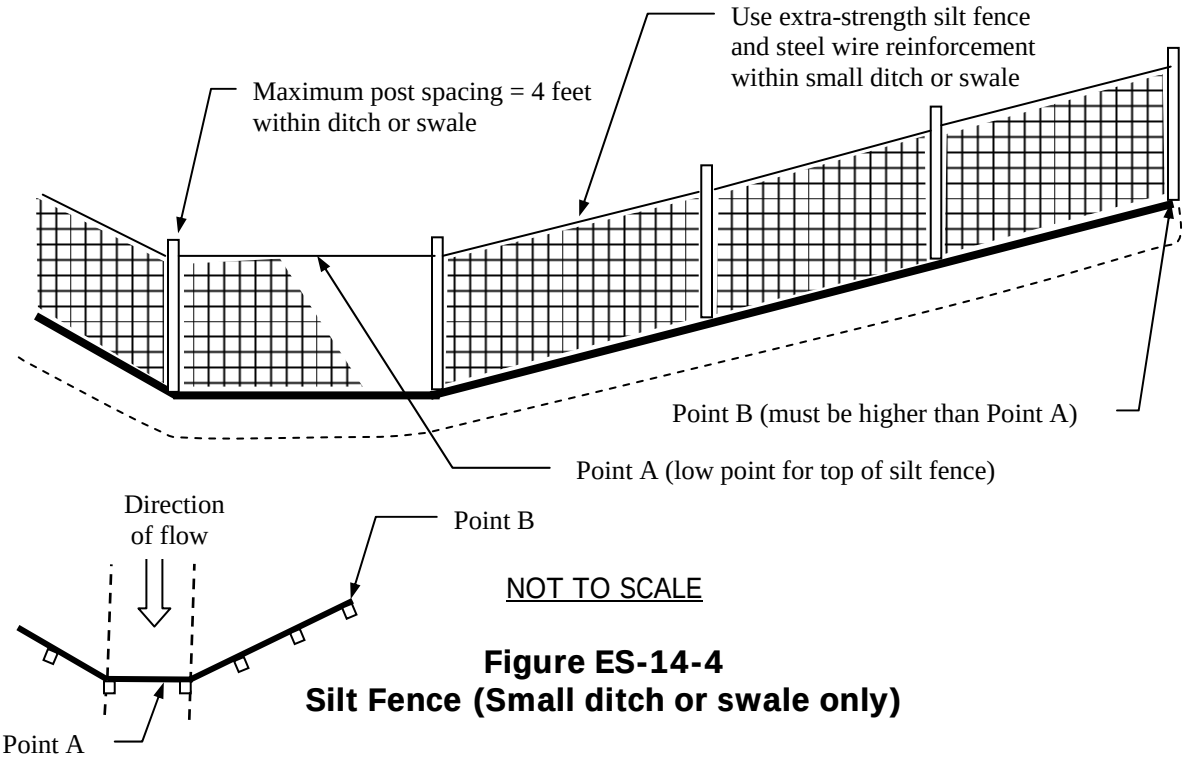

Figure ES-14-4
Silt Fence (Small ditch or swale only)

ACTIVITY: Straw Bale Barrier	ES – 15

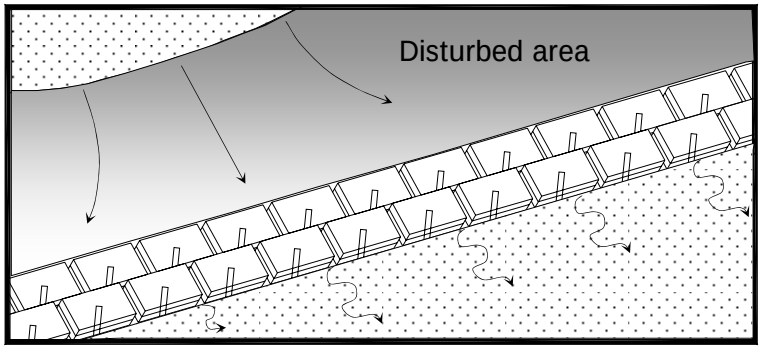

Targeted Constituents				
● Significant Benefit		◗ Partial Benefit	○ Low or Unknown Benefit	
● Sediment	○ Heavy Metals	○ Floatable Materials	○ Oxygen Demanding Substances	
○ Nutrients	○ Toxic Materials	○ Oil & Grease	○ Bacteria & Viruses	○ Construction Wastes

Description

A straw bale barrier consists of straw bales placed end to end along a level contour in a shallow trench and then staked to hold them in place. The straw bale barrier detains and filters storm water runoff, creating a small pond behind the barrier where sedimentation occurs. Straw bales, along with silt fence, are erosion control devices that can be used in many ways. This practice will significantly reduce sediment.

Suitable Applications

- Along the perimeter of the site.
- Along streams and channels, or to protect sensitive areas.
- Around temporary spoil areas and other small cleared areas.
- At the bottom of exposed and significant erodible slopes.
- Within a swale or ditch that has gentle slopes and drainage area less than 1 acre.

Approach

Straw bale barriers are a well-known and common temporary means for trapping sediment at or near the potential source of erosion, and can also reduce the potential for overland sheet flow to concentrate into rills and gullies. Straw bale barriers can be installed below slopes, along paved areas, along stream banks, and at many other locations without requiring vehicle access or heavy equipment.

Straw bale barriers can be installed by hand or by using a small piece of trenching equipment. Proper installation is necessary to ensure good erosion control. Improperly installed straw bale barriers can actually worsen erosion by concentrating storm water runoff instead of slowing and detaining.

Straw bale barriers are often used interchangeably with silt fence. However, silt fence has a much higher efficiency in reducing sediment, will last longer, and may be more cost effective. A straw bale barrier typically has a maximum life of three months prior to excessive deterioration and rot. Straw bale barriers are often used in two rows of bales, or with a layer of geotextile fabric across the front, or in conjunction with other erosion control devices, in order to improve the sediment removal capabilities of straw bales. A single row of straw bale barrier may remove approximately 60% of the sediment if carefully installed and maintained. Efficiency is maintained primarily by replacing deteriorated straw bales in a timely manner.

Straw bale barriers should not be used in live or continuously flowing streams. Straw bales should not be used in ditches or swales that drain areas greater than 1 acre. Do not use straw bales in steep ditches or swales where the design flow is greater than 2 feet per second. Straw bales are subjected to flotation and to damage from animals. Do not install in locations subject to large forces from storm water runoff. Straw bale barriers should not be used for extended periods of time. The expected life of a straw bale is three months, and may be further shortened by rainy weather and extreme temperatures.

Straw bale barriers are effective for smaller quantities of water, such as overland sheet or rill flow. Like silt fences, straw bale barriers must be sufficiently anchored and follow the contours. Since straw bales are not as effective as silt fence fabric, straw bale barriers are likely to be used in conjunction with other erosion source controls.

Materials

Straw bale barriers shall be made from baled clean straw or hay, with no foreign substances or materials other than some type of string or wire. Each bale shall contain at least 5 cubic feet of straw or hay material, typically weighing in the neighborhood of 50 pounds. A typical straw bale is 30 to 36 inches long.

Bales should be bound with metal wire, nylon string, or polypropylene string that will adequately resist weathering and rot throughout the service life of the straw bale. Metal wire should be at least 16-gauge size baling wire. String shall be durable and have at least 80 pounds of breaking strength. Do not use cotton or jute bindings, which will quickly deteriorate and fail.

Anchoring stakes are typically 36 to 42 inches long, with 18 inches driven into the ground to secure the straw bales. Stakes may be either wood posts, such as 2” x 2” size oak or other hard woods, or iron rebar such as #4 diameter. A larger size wood post may be needed for pine or other soft woods. See Figure ES-15-1 for typical trenching and stake details.

Installation Guidelines

- Silt fence is generally preferred over straw bale barriers for ditches and for critical slopes that are long or steep. Straw bale barriers are used primarily in areas where overland sheet flow occurs.

- The drainage area for a straw bale barrier shall not exceed 10,000 square feet for every 100 feet of straw bale barrier. For a rectangular area, this means a maximum average slope length of 100 feet, which is only permissible for slopes flatter than 2 percent.

Maximum Slope Lengths for Straw Bale Barriers	
Land Slope	**Maximum Slope Length**
Less than 2 %	100 feet
From 2 to 5 %	75 feet
From 5 to 10 %	50 feet
From 10 to 20 %	25 feet
More than 20 %	15 feet

- Locate straw bale barriers at least 5 to 7 feet beyond the base of steep or long slopes. In locations at the bottom of a slope, turn the ends of the straw bale barrier upslope so that a depth of storm water equal to the straw bale height is retained in front of the straw bales. The impoundment is similar to the silt fence installation in Figure ES-14-2, except that an emergency overflow is not needed.

- A double row of straw bale barriers is commonly specified to increase sediment removal. Rows should be staggered to prevent washouts. Silt fence fabric can also be entrenched into ground between two rows of straw bales for special situations.

Common problems with straw bale barriers are:

- Not adequately entrenched into the ground.
- Straw bales are not adequately bound with sufficient wire or string.
- Not installed on a level contour.
- Installed in a location with too much storm water flow.

Installation Procedures

Step 1: Prepare the grade and alignment for the straw bale installation. Clear brush and reshape ground profile as necessary. Verify that the straw bale barrier is installed along a level contour and that maximum slope lengths are not exceeded.

Step 2: Excavate a trench approximately 4 inches deep and slightly wider than the straw bale. Keep excavated soil nearby for use in filling the trench. Clay soil, if available, is preferred to make a watertight seal.

Step 3: Place the straw bales into the trench one at a time. Each straw bale should be oriented so that the bindings are horizontal to prevent

them from decomposing. Anchor each straw bale by driving the first stake at an angle to ensure a tight fit with the previous straw bale. Drive the second stake at a corresponding opposite angle to prevent the straw bale from floating or tearing apart (as shown in Figure ES-15-1). Tightly fill or chink all gaps with loose straw from the upstream end.

Step 4: Firmly compact the excavated soil against the uphill and downhill edges of the straw bale barrier. The use of clay soil will reduce piping and undercutting. Place excess soil against straw bale to a height of 4 inches on the uphill edge.

Maintenance

- Inspect straw bales after each rainfall event and also weekly for damaged or loosened material or bindings, excessive sediment buildup, undercutting flows, or flows around end of straw bale barrier. Repair or replace as necessary.

- Remove accumulated sediment whenever it reaches one-third of the straw bale height. Shovel by hand to prevent damage to the straw bales. Dispose accumulated sediment onsite to prevent movement of sediment.

- The expected life of a straw bale barrier is usually three months. Inspect straw bales more often as the materials start to deteriorate. Install new straw bales as needed to ensure proper erosion control.

- Remove straw bales when no longer needed. Used straw bales can often be used as mulch for seeding or to stabilize ground cover elsewhere on site.

Limitations

- Straw bales shall not be used in live and continuously flowing streams. Straw bales can generally not be used in channels that drain areas larger than 1 acre.

- Straw bales are subjected to flotation or to damage from animals. Do not install in locations subject to large forces from storm water runoff.

- Straw bale barriers should not be used for extended periods of time. The expected life of a straw bale is three months and may be further shortened by rainy weather and extreme temperatures.

References

30, 31, 32, 33, 34, 35, 141, 162, 167, 172, 179 (see BMP Manual Chapter 10 for list)

Notes:

1. Install at least two metal or wood stakes for each straw bale. The first stake should be angled down toward the previous straw bale, in order to ensure close contact.

2. Place straw bale barrier at least 5 to 7 feet away from any steep or long slopes to impound storm water runoff, similar to the silt fence detail on Figure ES-14-3.

3. Point B (at the outside of barrier) must be higher than point A (at ditch centerline).

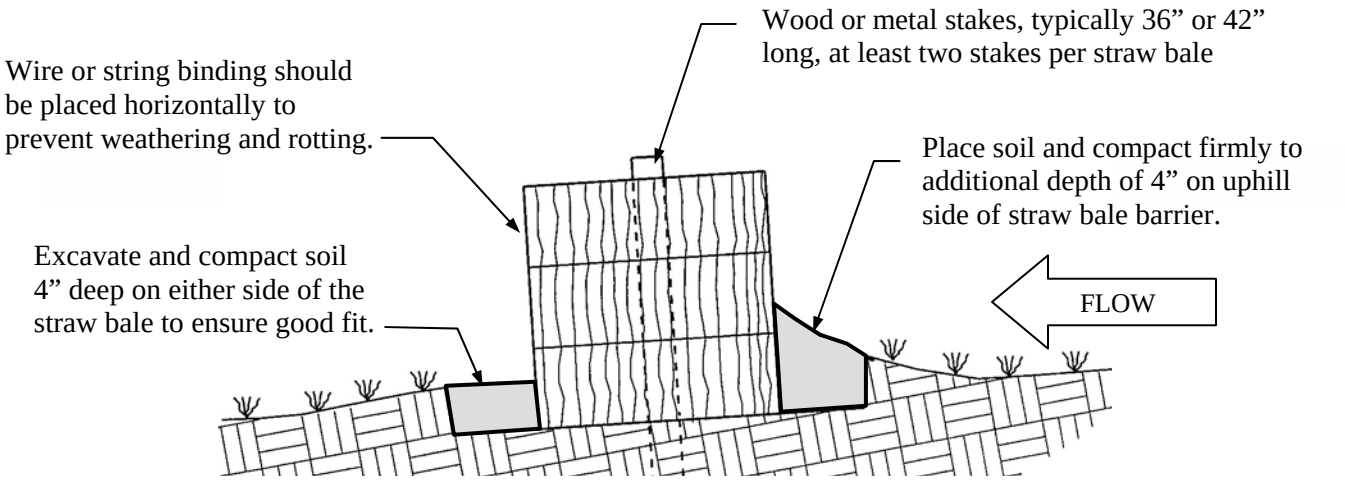

TYPICAL CROSS SECTION

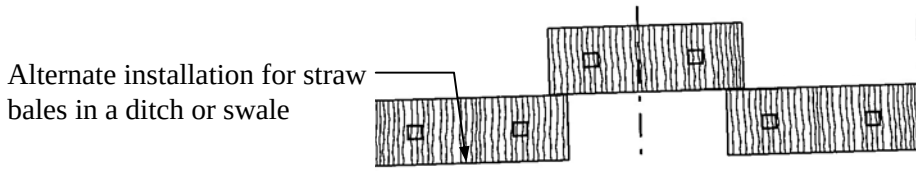

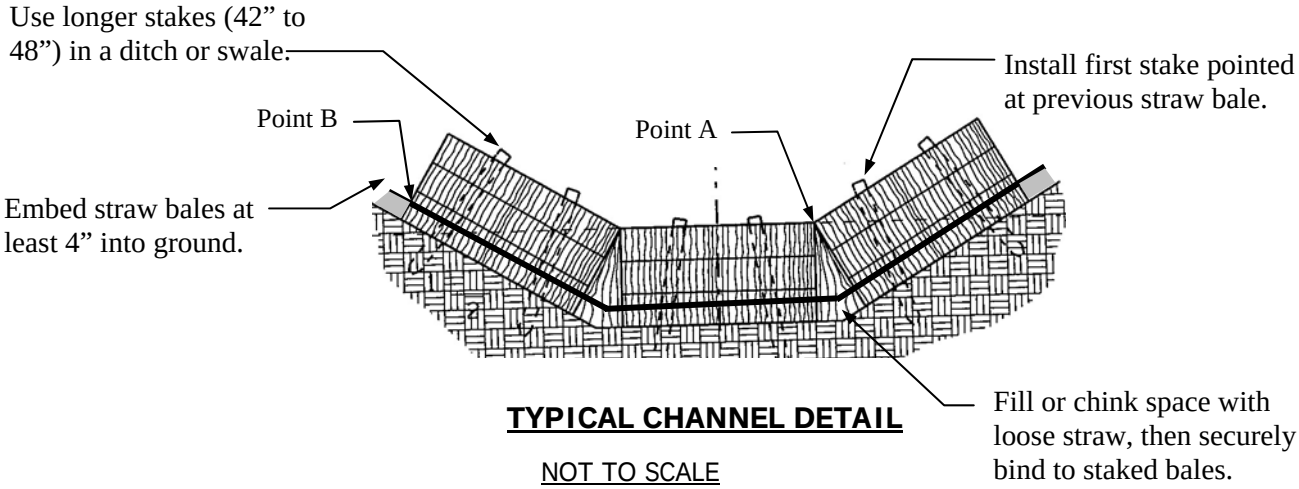

TYPICAL CHANNEL DETAIL

NOT TO SCALE

Figure ES-15-1
Straw Bale Barrier

ACTIVITY: Sandbag Barrier	ES – 16

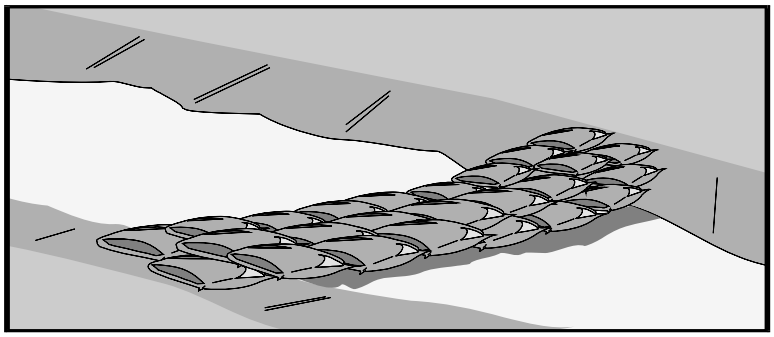

Targeted Constituents

● Significant Benefit ◗ Partial Benefit ○ Low or Unknown Benefit

● Sediment	○ Heavy Metals	○ Floatable Materials	○ Oxygen Demanding Substances	
○ Nutrients	○ Toxic Materials	○ Oil & Grease	○ Bacteria & Viruses	○ Construction Wastes

Description

Stacking sandbags is a quick and efficient way to create a barrier for detaining sediment-laden water to allow sediment to settle. A sandbag barrier can be deployed on paved surfaces and other areas where it is not feasible to install posts or stakes. This practice is likely to create a significant reduction in sediment.

Suitable Applications

- On paved surfaces, such as streets and parking lots, where it is difficult to install posts and stakes for other types of sediment control devices.
- For use as a check dam across a ditch or channel.
- To create a temporary sediment trap or dewatering impoundment.
- When changing site conditions call for a rapid deployment or adjustment of a sediment barrier.
- Across channels or small streams to serve as a barrier for utility trenches or provide a temporary channel crossing for construction equipment. All activities within a stream require permits that must be approved by TDEC; see ES-30 for typical stream crossings.
- Sandbags are frequently used for purposes other than erosion control, such as weights for securing materials such as geotextiles, tarps, plywood, and tarpaper against wind uplift.

Approach

Sandbag barriers do not filter storm water runoff. However, sandbags provide a barrier that is easily deployed, portable, durable, reusable, and inexpensive. Sandbag barriers are used to create a dam or backwater area, which slows the water down to allow sediment to settle out. Sandbag barriers are typically more durable than straw bales or silt fences, and sandbags tend to conform to the ground surface.

Since sandbag barriers impound water, provisions may be necessary for an outlet structure. Small sections of small-diameter (typically 3" or 4") polyvinyl chloride pipe may be placed within the sandbag barrier to drain water. An overflow weir can be fashioned by stacking a portion of the sandbag barrier to a lower height.

Placing a drainage pipe at the invert of the barrier allows it to drain completely. Placing a drainage pipe at the level of the first or second row of sandbags will allow the pipe to decant the top of the water impoundment, in essence functioning as a temporary sediment trap. A filter cloth can be placed over the drainage pipe to produce a cleaner storm water discharge.

Installation of sandbag barriers can be labor intensive when compared to silt fence, depending on the potential sources of sand or gravel. However, sandbag barriers may be used for sediment trapping in locations where silt fences and straw bale barriers are not strong enough. In addition, sandbag barriers are appropriate to use when construction of rock check dams is too difficult due to inaccessibility. Sandbag berms may cause less disturbance to established vegetation than a rock check dam.

Sandbags are particularly useful for construction projects in the urban environment. Sandbags can be placed along curbs and gutters, across catch basins and drop inlets, across closed streets, and in many other configurations. Sandbags can be relocated easily, as needed, even to the point of being momentarily removed for vehicle traffic.

Materials

- Sandbag lengths vary but a typical value is 24 inches. A typical width is 16 inches. Sandbag thickness is 6 to 8 inches. Based on these dimensions, the typical weight of a full sandbag is approximately 80 pounds. The recommended minimum weight of a sandbag is typically 50 pounds. Use large sandbags (fully loaded) in drainage channels or other applications with large flows.

- Sandbag material is typically polypropylene, polyethylene, or polyamide woven fabric. Minimum unit weight is 4 ounces per square yard, with a burst strength exceeding 300 pounds per square inch and ultraviolet stability exceeding 70 percent. Use of burlap is not allowed since it rots and deteriorates easily when wet.

- Clean coarse sand or gravel shall be used inside the sandbag. Do not use dirt or soil within sandbags to be placed for erosion control.

- Fasten sandbags securely using hog rings, sewing, or other suitable methods that prevent leakage from bags.

Installation

Sandbag barriers can be placed in several types of locations (streets and parking lots, curb and gutter, ditches). A general recommendation is to install across the direction of storm water flow, along a level contour, with ends angled uphill at least 6 feet to provide an impoundment and to prevent washout from scour. Storm water runoff can either be allowed to flow over the tops of the sandbags (by creating an overflow weir) or through short drainage pipes embedded within the sandbag barrier wall.

Barriers that are more than two sandbags high should be constructed by a pyramid approach or with additional reinforcement behind the direction of flow. Sandbags should be stacked in a brick-like fashion so that each sandbag in a row should sit on top of two other sandbags. See Figure ES-16-1 for typical installation.

Maintenance

- Inspect sandbag barriers weekly and after each rainfall event. Reshape or replace damaged sandbags immediately. Repair washouts or other damages as needed.
- Inspect sandbag barriers for sediment accumulations and remove sediments when depth reaches one-third of the barrier height. Dispose of removed sediment properly.
- Remove sandbags when no longer needed. Clean, regrade, and stabilize the area.

Limitations

Sandbags do not filter sediment or prevent erosion. Therefore, they only provide a supporting role in reducing storm water pollution. A sandbag barrier typically functions as a temporary sediment trap.

References

30, 31, 32, 33, 34, 35, 43, 114 (see BMP Manual Chapter 10 for list)

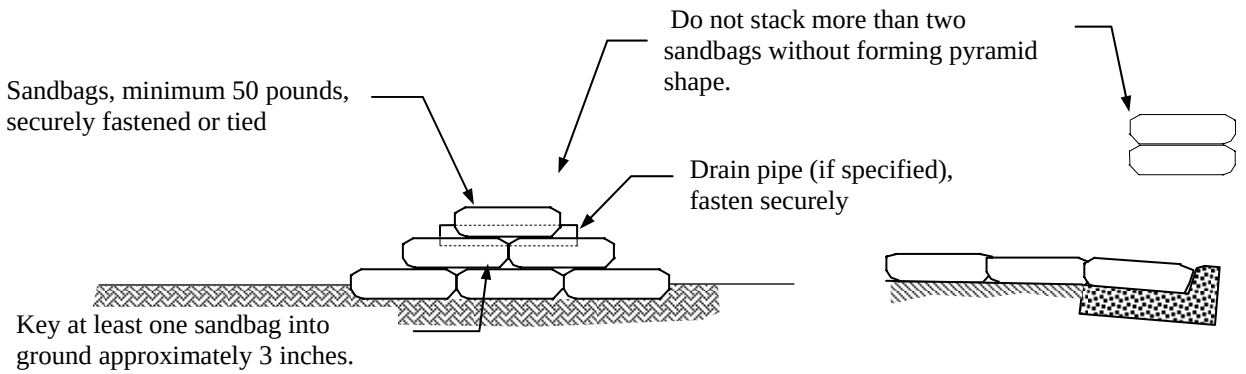

Embedded into soil

On streets and curbs

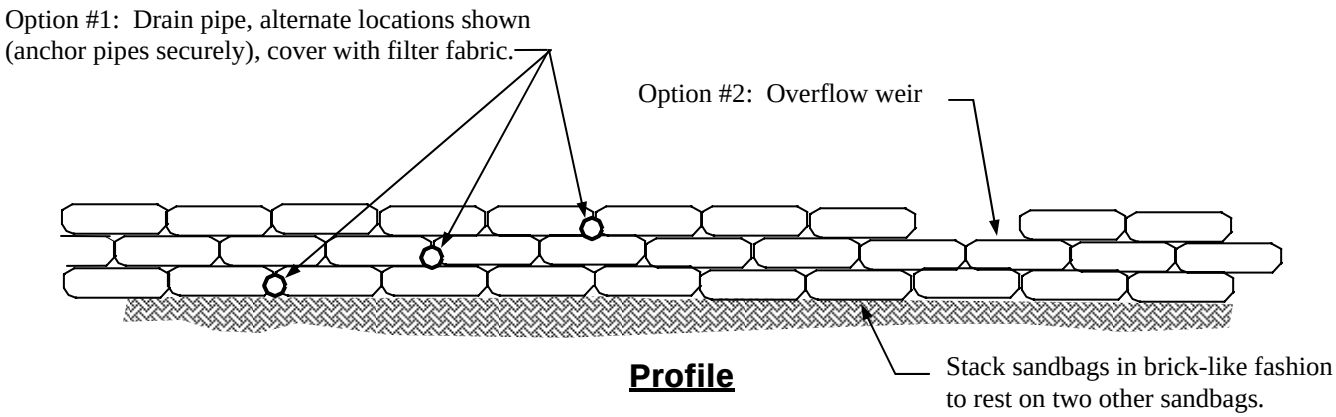

Profile

NOT TO SCALE

Figure ES-16-1
Sandbag Barrier

ACTIVITY: Brush or Rock Filter Berm	ES – 17

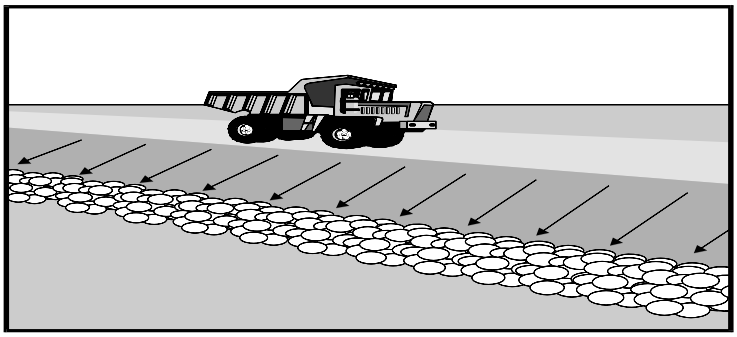

Targeted Constituents

● Significant Benefit ◗ Partial Benefit ○ Low or Unknown Benefit

● Sediment	○ Heavy Metals	○ Floatable Materials	○ Oxygen Demanding Substances	
○ Nutrients	○ Toxic Materials	○ Oil & Grease	○ Bacteria & Viruses	○ Construction Wastes

Description

A filter berm, made of natural materials that already occur on the project site, may be both efficient and cost effective. Filter berms may be constructed of brush or rock materials, either with or without the use of a supplementary geotextile fabric. Both types of filter berms are placed along a level contour where overland sheet flow can be detained and ponded. If properly anchored, brush or rock filter berms may be used for sediment trapping and velocity reduction. This practice significantly reduces sediment and is typically used as a supplemental tool on the interior of construction sites.

Suitable Applications

- Below the toe of slopes.
- Along the site perimeter.
- Along streams and channels, or adjacent to roadways.
- Around temporary spoil areas or other small cleared areas.

Approach

A filter berm can often be constructed from natural materials, such as brush or rocks. This is generally an efficient operation for the site contractor if these materials are already present on the project site, both timewise and in terms of installation cost. Brush and rock filter berms can also be installed with a geotextile fabric to increase sediment removal filtration and the overall stability of the berm. Wire netting (such as poultry fencing) can also be used to increase the stability for brush or rock berms. Gabions and other wire mattresses can also be used as a rock filter for erosion control.

Both types of filter berms are placed along a level contour. Common applications are along the edge of a gravel roadway or 5 to 7 feet beyond the toe of a slope, where overland sheet flow can be detained and ponded. Brush or rock filter berms slow the velocity of overland runoff, allowing sediment to settle out or become trapped in the filter. In this manner,

the brush and rock filter berms are very similar in function to ES-13, Check Dams, except that filter berms handle overland sheet flow and check dams handle storm water runoff channels. A similar application involving sand or gravel is ES-16, Sandbag Barrier.

Brush and rock filter berms both contain materials (dirt, leaves, dust, silt) that could potentially cause more pollution than they might remove. These measures should be constructed and managed carefully in order to become effective BMPs. A silt fence or straw bale barrier may be needed as a secondary measure to control dirt and leaves.

Brush Filter Berms

A brush filter berm is composed of brush, small tree limbs, rootmat, grass, and leaves, or other material that is commonly generated as waste during the clearing and grubbing stage. The brush filter berm is constructed by piling these materials into a continuous and compacted mound along a level contour that is downhill from a disturbed area. Large logs or tree stumps should generally be avoided as part of the brush filter berm; they cause large voids or gaps in the berm and so defeat the purpose of detaining storm water. However, large logs by themselves can be used to slow storm water runoff in wooded areas, along paths and trails, or at the bottom of slopes.

A brush filter berm height of approximately 3 feet is recommended to slow or detain storm water. The minimum height of 2 feet may be used for short slopes less than 100 feet long. A corresponding width is generally 5 to 10 feet, with a shape that can be either triangular or somewhat rounded. Standard dozers or other grading equipment are used to compact and shape the brush filter berm to be more dense. Use rope or sturdy string to shape the brush filter berm and to hold it together.

A geotextile fabric can be used to increase the sediment retention or to provide a more stable brush filter berm. Install the filter fabric into a trench 6 inches deep immediately uphill from the formed berm. Then lay the filter fabric over the front face of the brush filter berm. Secure the filter fabric using staples, stakes, ropes, or wires so that the fabric will not be uplifted by winds or storms. Overlap edges of filter fabric by 6 inches.

Brush filter berms are generally not used in developed areas or wherever aesthetics will be of concern. Brush filter berms may also be unpredictable in terms of performance. Since they are composed of natural materials, they may or may not need to be removed after the uphill sites are stabilized. Brush filter berms may provide a habitat for various types of desirable wildlife, or they could harbor pests and rodents in areas where these problems are known to exist.

Rock Filter Berms

A rock filter berm can be created from natural gravel or rock at the project site, or from imported gravel and rock. It is placed and compacted along a level contour, where sheet flow may be detained and ponded to promote sedimentation. Some type of geotextile fabric or wire screen is recommended to keep the berm shape intact. A gabion or wire mattress may be used to construct a rock filter berm, provided that the gabion wire spacing is compatible with size of aggregate or rock.

Rock filter berms can be used along the downslope edge of roadways or 5 to 7 feet beyond the toe of a slope. Rock filter berms can also be incorporated as part of a gravel road and other type of unpaved traffic area, in order to prevent storm water from flowing into paved roads.

Construct a rock filter berm by first placing larger rocks as a base. If available, smaller rocks or gravel are placed on the uphill side of the larger rocks to form a natural filter. Geotextile filter fabric can be underneath the rock filter berm itself, which would adequately anchor the fabric. For areas where concentrated flows may occur, use larger rock without any dust or fine material, placed in a gabion or other type of staked woven-wire mattress.

Supplemental Materials

A geotextile filter fabric may be used to increase sediment retention. Burlap or other type of porous cloth material may be used in instances where no sediment is expected. At the toe of a graded slope or other instances with substantial amounts of sediment, a silt fence fabric should be selected. Consult ES-14, Silt Fence, for additional recommendations and trenching for geotextile fabric.

For areas with little potential for sediment, wire netting may be used to stabilize the filter berm. Woven-wire sheathing, such as frequently used for gardens and for poultry fencing, is typically 20-gauge galvanized wire, woven as a hexagonal mesh.

Stakes can be used to secure geotextile fabric or wire netting. Space wood, metal, or biodegradable stakes to prevent damage from wind uplift for geotextile fabric.

Maintenance

- Inspect filter berms after each rainfall event and also weekly for damaged fabric, excessive sediment buildup, undercutting flows, or flows around end of filter berms. Repair or replace as necessary.

- Remove accumulated sediments when depth reaches 6 inches in front of filter berm. Dispose at onsite locations where sediment will not erode or

become resuspended. Reshape filter berms and replace brush, rock, fabric, or stakes as needed.

- Remove filter berms after uphill drainage areas are stabilized. Natural materials such as brush and rock may be left in place if they do not cause any landscaping or nuisance problem. Remove all manmade materials (wire, stakes, fabric, etc.)

Limitations

- Brush or rock filter berms shall not be used in live or continuously flowing streams. Filter berms require sufficient space for ponded water.

- Installation and removal of filter berms may be difficult or time-consuming in areas with steep slopes or difficult access requirements. Consider how to remove rock filter berms during design phase.

- Not appropriate for contributing drainage areas greater than 2 acres. More reliable structural methods, such as temporary sediment traps and sediment basins, should be used if large amounts of sediment will be generated. Performance of brush filters may be relatively unpredictable.

References **30, 31, 32, 33, 34, 35, 141, 162, 167, 172, 179** (see BMP Manual Chapter 10 for list)

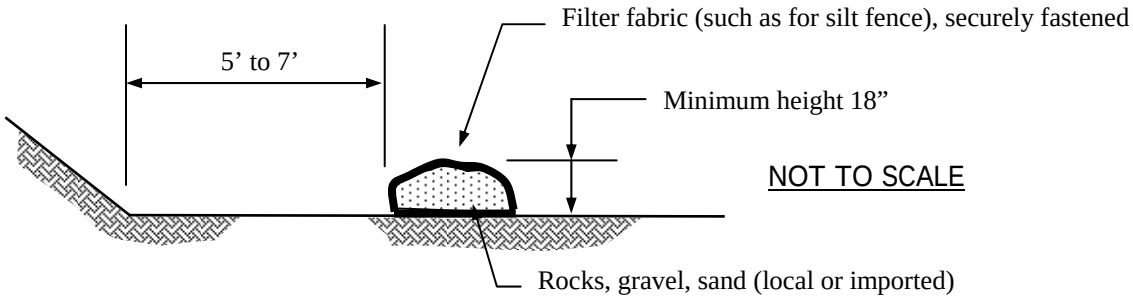

Figure ES-17-1
Rock Filter Berm

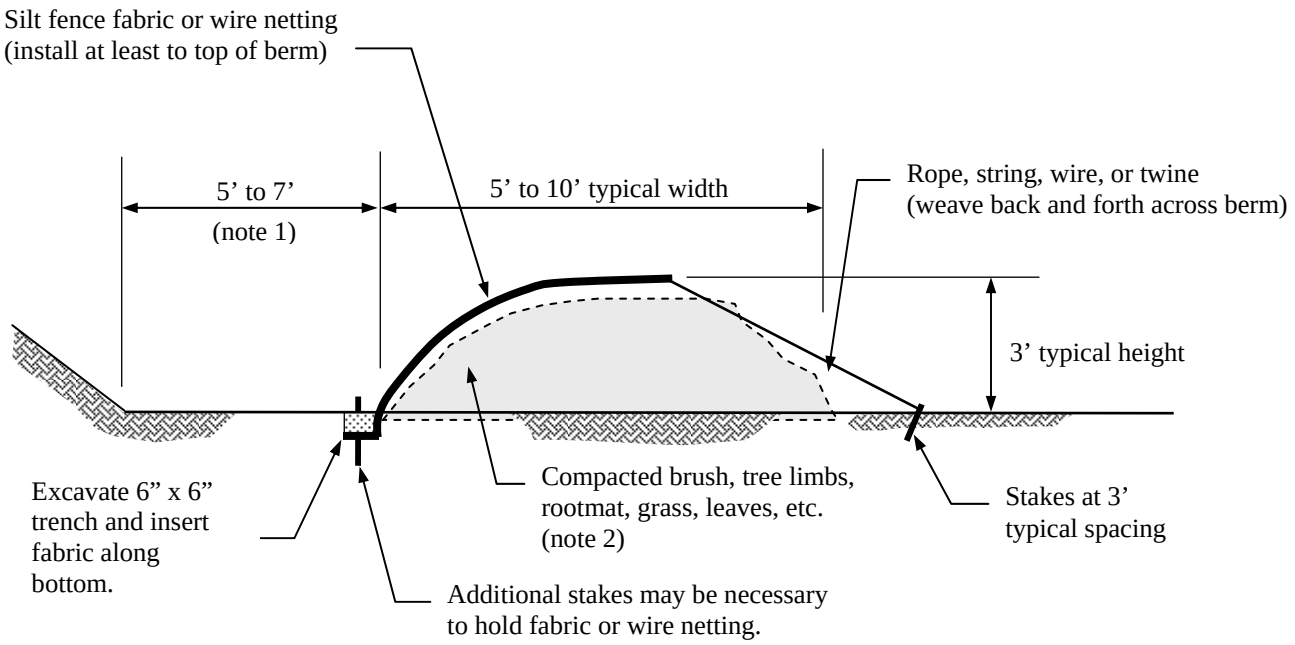

NOT TO SCALE

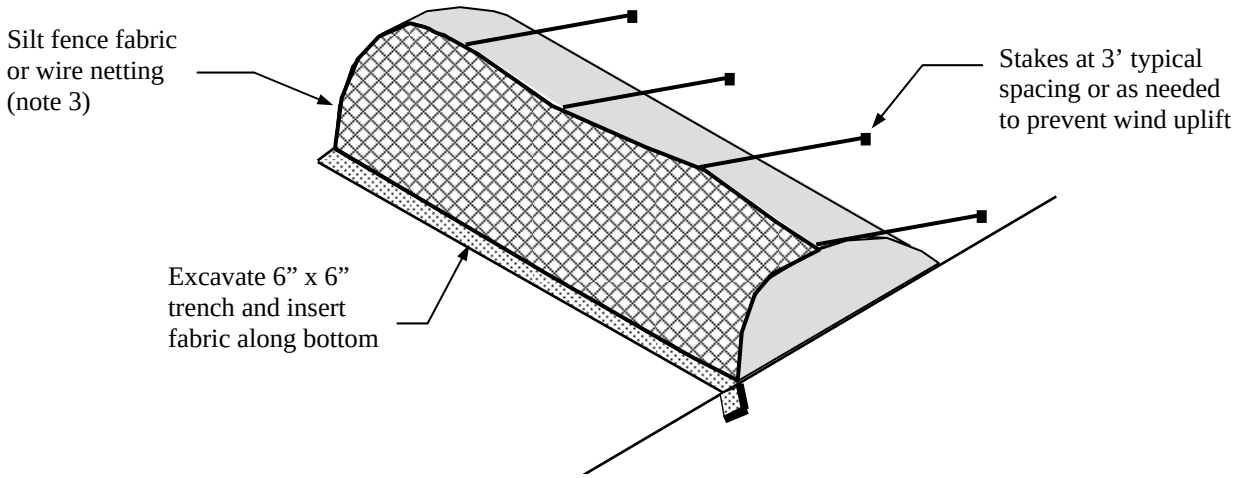

Notes:

1. Place brush filter berm at least 5 to 7 feet away from steep or long slopes to impound storm water runoff. Wrap ends of brush filter uphill and anchor within slope.

2. Firmly crush and compact brush material so that it forms a dense berm. Prevent sticks and tree limbs from perforating silt fence fabric.

3. Silt fence fabric, if needed, is typically placed on the front half of brush filter berm. Wire netting is typically placed all the way across the brush filter berm.

Figure ES-17-2
Brush Filter Berm

ACTIVITY: Temporary Sediment Trap	ES – 18

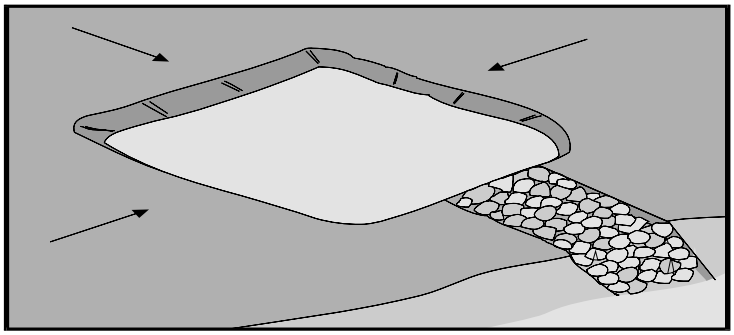

Targeted Constituents				
● Significant Benefit		◗ Partial Benefit	○ Low or Unknown Benefit	
● Sediment	○ Heavy Metals	○ Floatable Materials	○ Oxygen Demanding Substances	
○ Nutrients	○ Toxic Materials	○ Oil & Grease	○ Bacteria & Viruses	◗ Construction Wastes

Description

A sediment trap is a small temporary pond that drains a disturbed area so that sediment can settle out. A sediment trap is constructed early in the construction process using natural divides and favorable topography where possible to minimize grading. This practice will significantly reduce sediment.

Suitable Applications

- Any disturbed area that is less than 5 acres.
- Along the perimeter of a project site to prevent sediment-laden runoff from being discharged.
- Immediately uphill from temporary storm drain inlet protection measures.

Approach

A temporary sediment trap is a small settling pond built to collect and store sediment from uphill sites cleared and graded during construction. It is intended for use on small tributary areas with no unusual drainage features, and projected for a quick build-out time at the initial construction phases. The principal feature distinguishing a temporary sediment trap from a temporary sediment basin is the lack of a pipe or riser.

A sediment trap is a temporary measure with a typical design life of approximately six months and a maximum drainage area of 1 to 5 acres, depending on the manner of construction. The maximum life of a sediment trap shall not be more than 12 months, and also depends on the type of construction chosen. Temporary sediment traps are often built early in the construction process to control erosion, before a larger temporary or permanent structure (such as a sediment basin or modified detention basin) can be constructed. A sediment trap that is not carefully maintained and inspected may turn into a wetland area; wetlands are protected by state and federal laws and cannot be removed or altered without a permit from TDEC.

A temporary sediment trap is not as effective as a temporary sediment basin and therefore requires that more sediment control measures must be operative upstream. A sediment trap is effective against coarse sediment, but not against silt or clay particles that remain suspended. A temporary sediment trap requires very frequent maintenance and inspection until the site is permanently protected against erosion.

Place sediment traps at locations that will require minimal clearing and grading. Balance excavation and fill quantities when possible to minimize grading. Natural draws or swales are usually favorable places to build a sediment trap. Sediment traps should be easily accessible for frequent maintenance and inspection, but do not locate them in the middle of major construction areas. Do not locate sediment traps where failure can cause property damage or inconvenience to humans.

Undisturbed areas should generally be routed around temporary sediment traps (and also sediment basins and detention basins) early during the construction process. This can be achieved by temporary diversions or by permanent channels. This allows “clean” storm water runoff to remain clean. In addition, the total storm water runoff volume to the sediment trap is reduced. This allows silt and clay particles to have less storm water runoff depth to settle through, and these particles are also less likely to be resuspended.

Types of Construction

The basic principles and design guidelines are applicable to various methods for creating a temporary sediment trap. The main differences occur in the type of outlet structures that is chosen. The following types are identified and shown with details:

(A) Overflow (level spreader): Figure ES-18-1
(B) Rock outlet: Figure ES-18-2
(C) Combination straw bale and silt fence outlet: Figure ES-18-3

(A) An overflow sediment trap is limited to small areas less than 1 acre, typically with gentle slopes (1 or 2 percent) and without major grading operations. It functions very similarly to a level spreader. If water enters the sediment trap with very slow velocities, the same amount of water will be slowly displaced and leave the other end of the sediment trap. Silt fence, straw bale barriers, or grass filter strips are used to “polish” the overflow water as it leaves the sediment trap.

(B) The rock outlet type relies on filtering through layers of aggregate, rock, or riprap material to dewater the sediment trap. It is the sturdiest of the sediment trap designs and generally requires less maintenance. It can be used for drainage areas up to 5 acres and for up to 12 months.

(C) The combination straw bale and silt fence outlet uses the two most common sediment-filtering devices to dewater the sediment trap. Additional structural support, such as wood bracing or wire fence installation, is required for these two materials to resist 1 foot or more of ponded water. Straw bales are liable to rot quickly or to blow out; silt fence fabric can rip or tear. The combination straw bale and silt fence outlet should be limited to total drainage areas of less than 1 acre. This type of outlet requires frequent maintenance and adjustments to ensure that the released storm water is free from sediment.

Volume

Minimum volume of a sediment trap shall be 67 cubic yards per acre for the total drainage area. The volume shall be measured at an elevation equivalent to the spillway invert.

Optimal design volume of sediment trap depends on type of soil, size, and slope of drainage area, amount of land disturbance, desired sediment removal efficiency, and desired cleanout frequency. A recommended volume for temporary sediment trap in heavily disturbed areas is 134 cubic yards per acre, which equates to 1 inch of storm water runoff. Optimal design of this type of sediment trap includes an upper zone of at least 67 cubic yards per acre (to be dewatered using one of the outlet design alternatives) and a lower wet zone for sediment storage and settling.

Volume of a sediment trap should generally be computed from existing and proposed contour lines, or by using measured cross sections. An approximate method for estimating volume for most sediment traps using a natural draw or swale is:

$V = 0.4 \times A \times D$
V = storage volume (below the invert of the emergency spillway)
A = surface area (at the level of the emergency spillway invert)
D = maximum depth (as measured from the emergency spillway invert)

The recommended cleanout volume is 1/4 of the total storage volume of a sediment trap. The nominal volume for sediment removal is, therefore, 17 cubic yards per acre (which is 1/4 x 67 cubic yards per acre). The recommended sediment depth for the cleanout volume shall be computed. A stake or post shall be installed and marked to assist in identifying the need for sediment cleanout.

Other Physical Parameters

- Maximum total drainage area to a temporary sediment trap is 5 acres, depending on the type of construction. Maximum life span of a temporary sediment trap is 12 months, again depending on the type of construction.

- Maximum height of sediment trap embankment shall not be more than 5.5 feet, as measured from the downstream toe of slope to top of berm.

- Maximum ponded depth of sediment trap shall not be more than 4 feet, as measured from the bottom of the trap to the invert of the emergency spillway.

- Maximum slopes shall be 2:1 (H:V) for excavated areas and for compacted embankments. Most side slopes should be to 3:1 (H:V) or flatter, which will allow people and equipment to safely negotiate slopes or to enter the sediment trap.

- Top width of embankment shall be at least as wide as the actual height of sediment trap embankment, with a minimum width of 3 feet.

- Storm water travel distances should be maximized across the sediment trap. The length to width ratio must be greater than 2:1 (L:W) for the principal flowpaths in order to maximize residence time of storm water within the sediment trap. Baffles may be required to prevent short-circuiting of flow.

- A typical baffle design is to use 4' x 8' sheets of exterior grade plywood ½ inch thick, mounted on 4" x 4" hardwood posts. Posts shall be firmly set at least 2 feet into the ground with maximum spacing of 8 feet. Posts and plywood shall not be lower than 6 inches below the top of embankment elevation.

Emergency Spillway

The emergency overflow outlet of the temporary sediment trap must be stabilized with rock, riprap, geotextile, vegetation, or another suitable material that is resistant to erosion. A stable emergency spillway must be installed to safely convey storm water runoff for the 10-year storm event.

An emergency overflow weir should be provided at an elevation of at least 1.5 feet below the top of embankment, with a minimum freeboard of 1 foot. The minimum bottom width of a trapezoidal section for an emergency overflow weir should be:

4 feet	—	1 acre (total drainage area)
6 feet	—	2 acres (total drainage area)
8 feet	—	3 acres (total drainage area)
10 feet	—	4 acres (total drainage area)
12 feet	—	5 acres (total drainage area)

Installation Guidelines

Temporary sediment traps are usually installed at the beginning of a construction project, immediately after the perimeter erosion control measures have been performed. It is intended that grading, earthwork, trenching, and other land-disturbing activities take place early in the construction process, so

that the temporary sediment trap should not be necessary for more than 12 months.

Step 1: Place perimeter erosion control measures around sediment trap location. Clear and grub, particularly underneath embankments. Grade and/or excavate to construct the required volume and to provide fill material for any embankments.

Step 2: Construct any embankments needed by using fill material made of clay that is free of roots, large rocks, and organic material. Place fill in layers 6 inches thick and then compact using a sheep's foot roller or vibratory equipment.

Step 3: Install outlet structures such as rock outlet berm, combination straw bale and silt fence outlet, or an emergency overflow weir. Install geotextile fabric and wire fencing at potential locations of stone outlet failure. Install baffles, if necessary, to maximize storm water residence time within the sediment trap.

Step 4: Stabilize slopes using temporary vegetation, erosion control matting, straw mulch, or other measures. Inspect final work for safety and function. Install warning signs, barricades, perimeter fence, or other measures necessary to protect construction workers and equipment.

Maintenance

- Inspect sediment traps weekly and after each rainfall event for excessive sediment buildup, undercutting flows or seepage, slope failure, settlement, and structural soundness. Regularly inspect quality of water being discharged for suspended sediment and color. Identify and perform necessary repairs to improve water quality. Check downstream channel for erosion or sedimentation.

- Remove accumulated sediment whenever it reaches the designated cleanout level, which is one-fourth of the total sediment volume. The nominal volume of sediment (1/4 x 67 cubic yards = 17 cubic yards) usually requires heavy equipment and good weather for sediment cleanout. Shovel by hand adjacent to outlet control structures to prevent equipment damage in this area. Dispose of accumulated sediment onsite at a protected location to prevent resuspension of sediment.

Limitations

- Temporary sediment traps shall not be used in live or continuously flowing streams. Sediment traps may kill nearby vegetation by excessive sediment or by long periods of submergence.

- Temporary sediment traps only remove coarse particles that settle quickly. Sediment traps are not effective for fine-grained soils such as silt or clay. Additional upstream erosion control measures are necessary.

- Sediment traps can be attractive and dangerous to children. Protective fencing or other access control measures for the project site are recommended. Sediment traps with steep slopes may be difficult for someone to exit.

References

8, 9, 30, 31, 32, 33, 34, 35, 43, 114, 135, 136, 141, 144, 162, 167, 179
(see BMP Manual Chapter 10 for list)

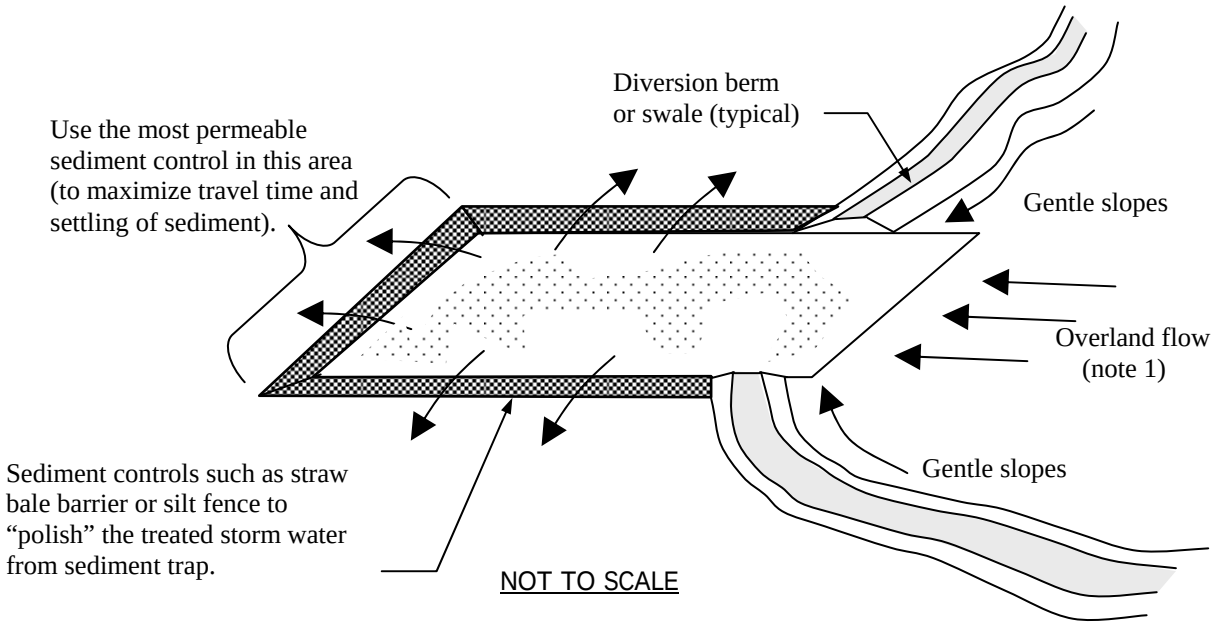

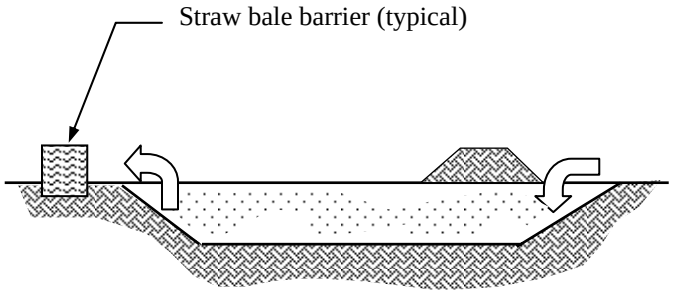

Notes:

1. Maximum area for overflow sediment trap is usually 1 acre. Must have gentle slopes (less than 2% generally) and predominantly overland sheet flow.

2. Maximum permanent wet depth is 2 feet. Overflow sediment traps may not be effective for high groundwater table and inflows.

Figure ES-18-1
Temporary Sediment Trap — Overflow

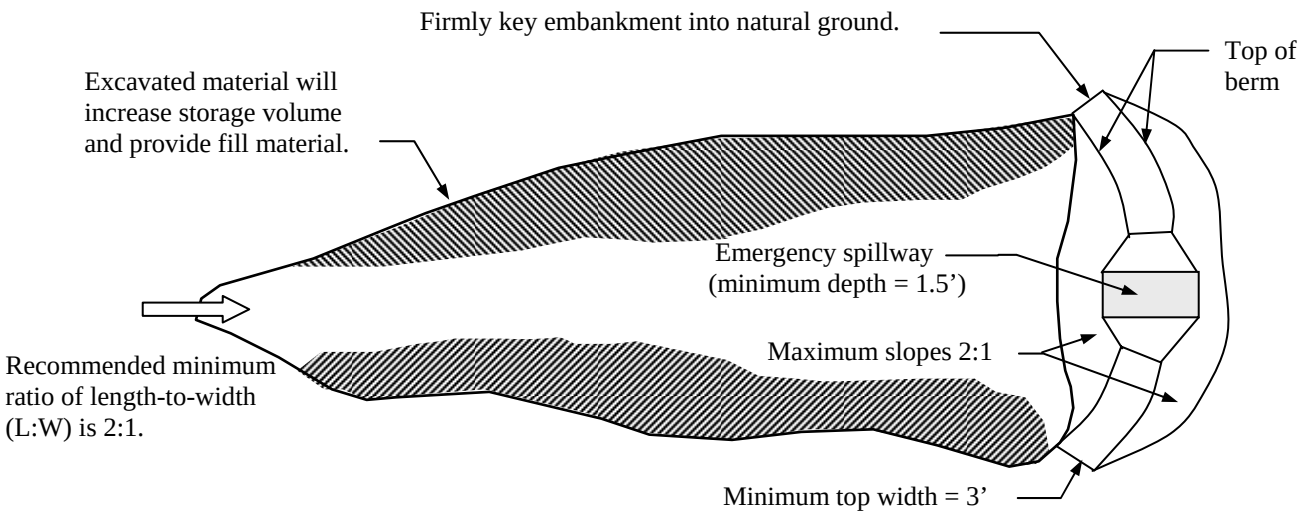

TYPICAL PLAN VIEW

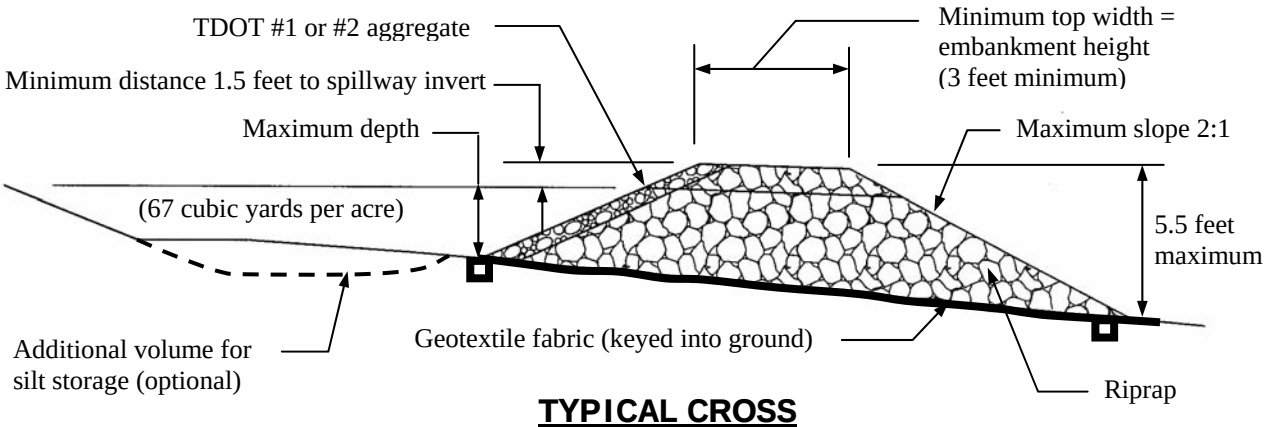

TYPICAL CROSS

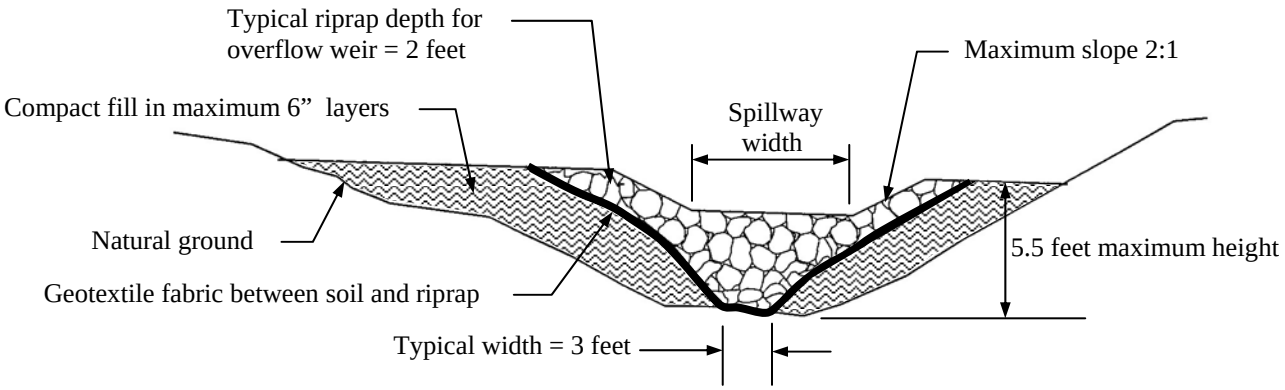

TYPICAL PROFILE THROUGH EMBANKMENT

NOT TO SCALE

Figure ES-18-2
Temporary Sediment Trap — Rock Outlet

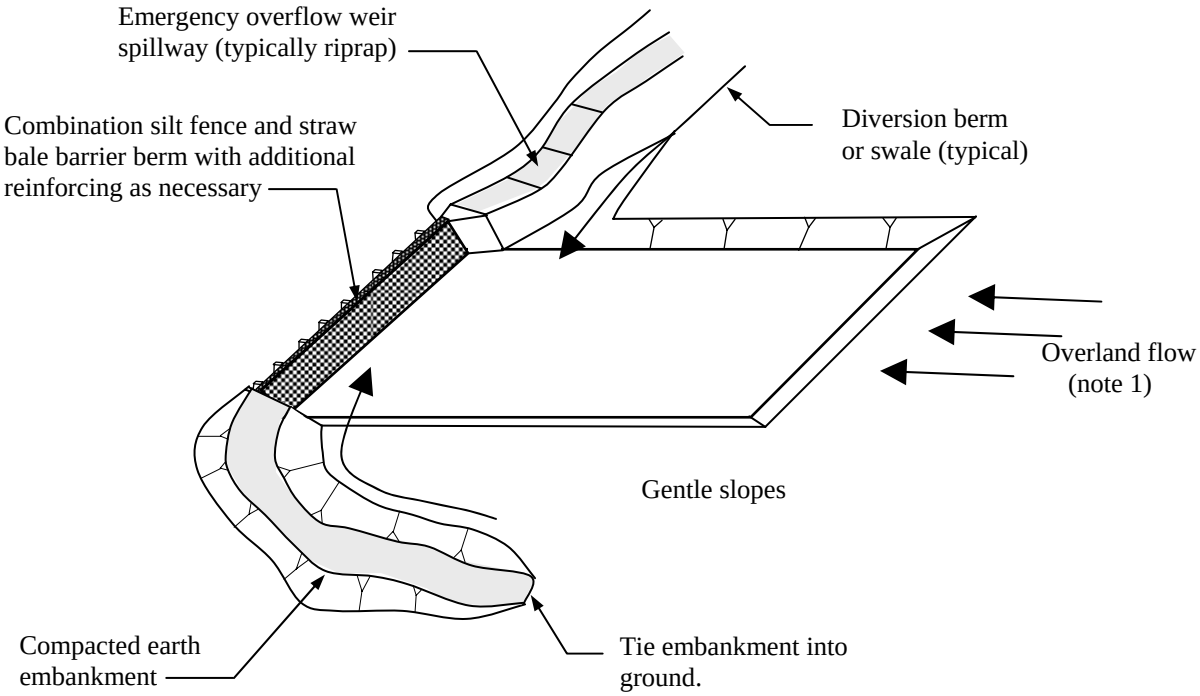

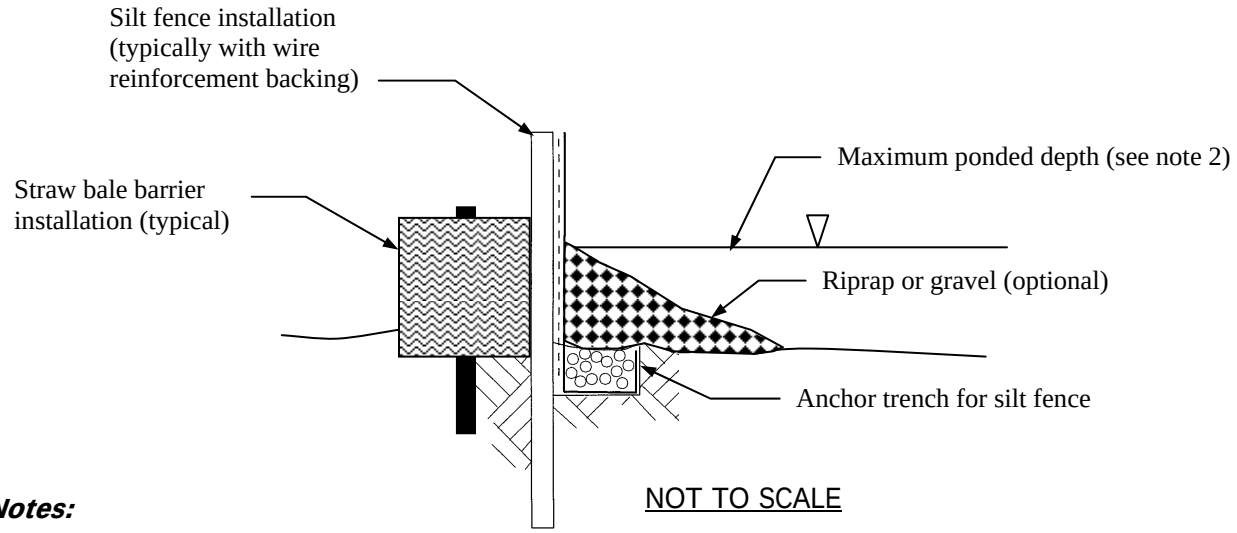

Notes:

1. Maximum area for sediment trap with a silt fence /straw bale combination outlet is usually 1 acre with gentle slopes and predominantly overland sheet flow.

2. Maximum depth of ponded water is usually 12 inches or less. Provide emergency spillway by constructing riprap channel as necessary.

Figure ES-18-3
Temporary Sediment Trap — Combination Outlet

ACTIVITY: Sediment Basin	ES – 19

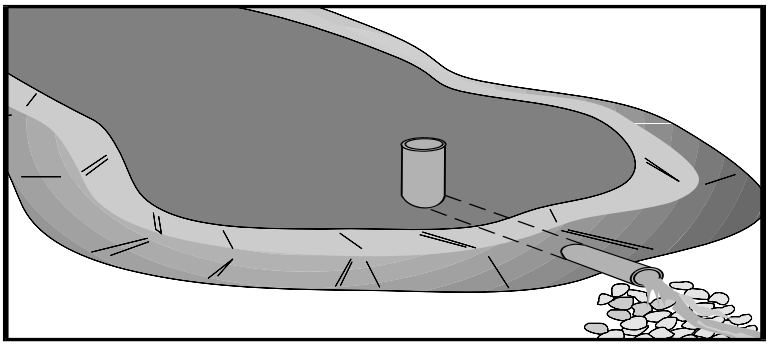

Targeted Constituents				
● Significant Benefit		◗ Partial Benefit	○ Low or Unknown Benefit	
● Sediment	○ Heavy Metals	◗ Floatable Materials	○ Oxygen Demanding Substances	
◗ Nutrients	○ Toxic Materials	○ Oil & Grease	○ Bacteria & Viruses	◗ Construction Wastes

Description

A sediment basin is an impoundment for the purpose of detaining runoff to allow excessive sediment to settle. A temporary sediment basin can be an impoundment (using natural divides and favorable topography where possible) to remove sediment during a construction project or other land-disturbing activity. A detention basin can also be refitted to temporarily perform as a sediment basin for handling large amounts of silt and eroded soil if good practices such as frequent inspection and maintenance are performed. A sediment basin will significantly reduce sediment.

Suitable Applications

- At the outlet of any disturbed area with major grading, particularly for disturbed watersheds that are larger than 5 acres.
- At locations with very steep slopes, sloughing or severely eroded soils, or industrial activities that generate sediment and soil particles.

Approach

A sediment basin is a carefully constructed impoundment with a controlled storm water release structure and is usually formed by a combination of excavation and embankment to have balanced cut/fill volumes. Sediment basins are more effective in retaining eroded soil and silt than temporary sediment traps (see ES-18); the principal feature distinguishing a sediment basin from a temporary sediment trap is the presence of a pipe, riser, or other outlet structure. A temporary sediment basin shall generally have a maximum lifespan of two years, unless designed as a permanent structure by a professional engineer.

Sediment basins may be designed as temporary or permanent structures, depending on the nature of the sediment-generating activity. This BMP is intended to principally cover temporary sediment basins. Permanent sediment basins must be designed to handle much larger flows, typically 25-year to 100-year storm events, with a designed emergency spillway, keyed construction with impermeable soils, anti-seep

collars, etc. Permanent sediment basins are generally constructed with much larger sediment volumes in order to reduce the cleanout frequency and maintenance.

Sediment basins must be located and designed so that failure of structure would not result in danger to human life, damage to personal property, inundation of public streets or highways, interruption of public services or utilities, or inconvenience to the general public. Place sediment basins at locations that will require minimal clearing and grading. Natural draws or swales are usually favorable places to build a sediment basin. Sediment basins should be easily accessible for frequent maintenance and inspection, but not located in the middle of major construction areas.

A sediment basin requires frequent maintenance and inspection until the site is permanently protected against erosion. Less maintenance and fewer cleanouts will be required if adequate erosion and sediment control devices are placed upstream. Undisturbed areas should generally be routed around sediment basins early during the construction process. This can be achieved by temporary diversions or by permanent channels. This allows "clean" storm water runoff to remain clean. In addition to keeping offsite storm water clean, the total storm water runoff volume to the sediment basin is reduced. This allows silt and clay particles to have less storm water runoff depth to travel through as they settle, and they are also less likely to be resuspended.

The City of Memphis and Shelby County require storm water detention for most development and redevelopment projects. Since storm water detention volumes are generally larger than the sediment-detaining volumes, a detention basin can usually function as a temporary sediment basin with relatively few modifications. However, a permanent detention basin must be designed by a professional engineer using storm water calculations as described in ST-01 and ST-02.

Dam Requirements

Embankments that impound more than 30 acre-feet of volume (and minimum 6 feet high) or that are higher than 20 feet (and minimum 15 acre-feet of volume) are subject to the Tennessee Safe Dams Act of 1973 and any further amendments by law. The impounded volume of a dam is measured at the top of embankment. The height of a dam is measured from the lowest point of natural grade (at downstream toe of embankment) to the top of embankment.

The Safe Dams Act is administered by the TDEC Division of Water Supply; further information on design standards, regulations, and permit applications is available at the TDEC website:
http://www.state.tn.us/environment/permits/safedam.pnp

A regulated dam is required to have a principal spillway with trash rack, an emergency spillway, a means of dewatering, minimum top width for embankment, compaction requirements, spillway design, and analysis for large storms, a seepage control system designed by seepage analysis, permanent benchmark, etc.

Volume

- Minimum volume of a sediment basin shall be 67 cubic yards per acre for the total drainage area, measured below the top of the principal spillway or riser.

- Optimal design volume of a sediment basin depends on type of soil, size, and slope of drainage area, amount of land disturbance, desired sediment removal efficiency, and desired cleanout frequency. A recommended volume for temporary sediment basins in heavily disturbed areas is 134 cubic yards per acre, which equates to 1 inch of storm water runoff per acre. Optimal design of this type of sediment basin includes an upper zone of at least 67 cubic yards per acre (to be dewatered using one of the outlet design alternatives) and a lower wet zone for sediment storage and settling.

- Volume of a sediment basin should generally be computed from existing and proposed contour lines, or by using measured cross sections. A very rough method for approximating volume for a sediment basin within a natural draw or swale is:

  $V = 0.4 \times A \times D$
  V = storage volume (below the invert of the emergency spillway)
  A = surface area (at the level of the emergency spillway invert)
  D = maximum depth (as measured from the emergency spillway invert)

- The recommended minimum surface area for an effective sediment removal of 75% for most soils is provided by the following formula. Please note that this efficiency is for smaller rainfall events, typically less than 1 inch, which allow sediment to settle out without too much turbulence or mixing.

  $A = 0.01 \times Q_2$
  A = surface area at the level of the emergency spillway invert (in acres)
  Q_2 = peak inflow rate for a 2-year, 24-hour storm (in cfs)

- The recommended cleanout volume is 1/4 to 1/3 of the total storage volume of a sediment basin. The nominal volume for sediment removal is therefore 17 cubic yards per acre (which is ¼ x 67 cubic yards per acre). The recommended sediment depth for the cleanout volume shall be computed. A stake or post may be installed and marked to assist in identifying the need for sediment cleanout.

Other Physical Parameters

- Maximum slopes shall be 2:1 (H:V) for excavated areas and for compacted embankments. Most side slopes should be to 3:1 (H:V) or flatter, which will allow people and equipment to safely negotiate slopes or to enter the sediment basin for maintenance or repair purposes. See Figure ES-19-1 for a typical sediment basin layout.

- Top width of embankment shall be at least as wide as the actual height of sediment basin embankment, with a minimum width of 5 feet. If the top of embankment is required for vehicle access to other areas, then the minimum width is 12 feet.

- An anchor trench or key, consisting of compacted impervious soil, should be constructed along the center of the embankment to prevent seepage and potential slipping. Minimum dimensions are 2 feet deep and 2 feet wide. The subgrade soils should be compacted and proof rolled prior to installing the anchor trench.

- Storm water travel distances should be maximized across the sediment basin. The length to width ratio must be greater than 2:1 (L:W) for the principal flowpaths in order to maximize residence time of storm water within the sediment basin. Baffles may be required to prevent short-circuiting of flow.

- A typical baffle design is to use 4' x 8' sheets of exterior grade plywood ½ inch thick, mounted on 4" x 4" hardwood posts. Posts shall be firmly set at least 2 feet into solid ground with maximum spacing of 8 feet. Posts and plywood shall not be lower than 6 inches below the top of embankment elevation. Other materials may be preferable in areas that are frequently submerged for long periods.

Principal Outlet

The principal outlet or spillway should be sized to adequately convey storm water runoff from the 2-year, 24-hour storm. The principal outlet should have a trash rack to prevent debris from clogging the structure. It is recommended that smaller orifices, less than 4 inches diameter, should also have some sort of wire cage structure to prevent clogging from trash or debris.

A pipe and riser outlet combination, shown in Figure ES-19-2, is typically used as the principal outlet for a temporary sediment basin. Typical materials for the pipe culvert are corrugated metal pipe (CMP) and reinforced concrete pipe (RCP). The circular riser is typically made from CMP or from precast manhole sections. A rectangular structure will serve the same purpose as a circular riser, and is often made from precast units, pour-in-place concrete, or even cement block construction.

CMP is often used because it is an inexpensive material, sturdy, easy to transport, and can be handled in manageable lengths. The most commonly available CMP is helically (spirally) corrugated throughout its length, with rerolled ends to allow metal coupling bands for watertight pipe connections. CMP material should be structurally sound and of sufficient gauge to resist traffic loadings.

The pipe culvert should be designed to handle the 2-year, 24-hour storm without using the emergency spillway. The minimum pipe size should be 12 inches diameter, and the minimum riser size should be at 1.5 times the pipe diameter. At least one anti-seep collar should be provided around the outlet pipe, to prevent seepage through the embankment. Metal collars are inexpensive and easy to install for corrugated metal pipe. The anti-seep collar should extend 18 inches beyond the pipe in all directions. See ST-01, Dry Detention Basin, for a typical anti-seep collar detail.

A riser may have the tendency to float if the orifices become clogged at some point. An anti-flotation concrete block shall be securely fastened to the riser by placing two #6 reinforcing bars through the riser, at right angles to each other, and then embedded within the concrete block. The block size should be sufficient to resist the buoyancy of an empty riser with a 1.25 factor of safety. For instance:

An outlet has a 24" diameter CMP riser that is 6.0 feet tall.
Use a square concrete block 18 inches thick; weight of concrete = 150 lb/ft^3
Ignore the weight of the CMP riser.

Then,

Force of buoyancy = π x (1.0 ft)^2 x 6.0 ft x 62.4 lb / ft^3 = 1176 pounds

Area of block = (1,176 pounds x 1.25) / (1.5 ft x (150 – 62.4 lb/ ft^3) = 11.19 ft^2

Side of square block = 3.34 ft = 40 inches

Emergency Spillway

An emergency spillway is typically an overflow weir, preferably at the edge of the embankment and constructed in cut material (native soil) rather than fill material. The overflow weir must be stabilized with rock, geotextile, vegetation, or another suitable material that is resistant to erosion. The spillway should have a designed control section that is level and straight, typically with a weir coefficient of 2.6 to 2.7 for a broad-crested weir when using riprap. The outlet channel of the emergency spillway should also be protected from erosion.

A stable emergency spillway must be installed to safely convey storm water runoff for the 10-year storm event with a minimum freeboard of 1 foot for temporary sediment basins (with a lifespan of less than 2 years). The emergency spillway elevation should be at least 1 foot above the top of the principal outlet (riser) and must be at least 1.5 feet below the top of the embankment. See the detail shown in Figure ES-19-2.

Dewatering Methods

The temporary sediment basin can be dewatered by several means, as long as the dewatering outflows are small to allow suspended soils to settle. The dewatering mechanism can either draw water from the top of the storage pool (such as a floating skimmer) or can filter water from any portion of the storage pool. Examples of both methods are shown in Figure ES-19-3 as possible considerations in modifying a permanent detention basin for use as a temporary sediment basin. Shelby County prefers that sediments basins have a permanent pool and that dewatering mechanisms leave the lower one-third of the basin full of water to maximize trapping and retaining sediment.

The sediment basin should generally have a minimum draindown time of at least 1 day for settling. The maximum draindown time should be less than 3 days in order to recover the runoff storage volume. A factor that can affect the selection of dewatering method is whether a temporary sediment basin will be converted into a permanent detention basin.

The most common method is to perforate a CMP riser with small holes typically ½ inch in diameter and then cover with a layer of rock or aggregate to filter out sediment. Aggregate size should be approximately ¾ to 1 inch (such as TDOT #5) to prevent stones from entering holes. This method of dewatering a temporary sediment basin may also be applicable for a permanent detention basin if design procedures in ST-01 or ST-02 are used.

An alternate method to dewater a basin with a CMP riser or a concrete outlet structure is to wrap geotextile filter fabric around the riser. Chain-link fencing should be used on the inside of the fabric in order to allow water to flow through the filter fabric. Chain-link fencing can also be used to wrap around the outside of the filter fabric, to protect it from floating debris. The geotextile fabric and chain-link fencing should be fastened securely to the structure to prevent movement.

A floating skimmer can be constructed of any type of lightweight pipe, such as polyvinyl chloride or flexible polyethylene pipe that can be made to float by attaching buoyant materials. The floating skimmer is connected to an orifice in the side of the outlet structure in order to provide elevation drop within the lightweight pipe. This type of skimmer is hard to design because the rate of dewatering is dependent on the type and number of perforations in addition to how deep the lightweight pipe would float on the surface.

Installation Guidelines

Temporary sediment basins are usually installed at the beginning of a construction project, immediately after perimeter erosion control measures have been performed. Most of the grading, earthwork, trenching, and other land-disturbing activities usually take place early in the construction process, but in some cases, it may beneficial to phase grading activities to reduce sediment loads.

Step 1: Place perimeter erosion control measures around sediment basin location. Clear and grub, particularly underneath embankments. Grade and/or excavate to construct the required volume and to provide fill material for any embankments.

Step 2: Construct any embankments needed by using fill material made of clay that is free of roots, large rocks, and organic material. Place fill in layers 6 inches thick and compact well by traversing with a dozer or other equipment. Embankments in critical areas should be compacted to at least 95% of standard maximum density.

Step 3: Install outlet structures, such as a pipe and riser system or an emergency overflow weir, as the embankment is being constructed. Install geotextile fabric and wire fencing at potential locations of stone outlet failure. Install baffles if necessary to maximize storm water residence time within the sediment basin.

Step 4: Stabilize slopes using temporary vegetation, erosion control matting, straw mulch, or other measures. Inspect final work for safety and function. Mark or otherwise locate sediment cleanout elevations and thicknesses. Install warning signs, barricades, perimeter fence, or other measures necessary to protect construction workers and equipment.

Maintenance

- Inspect sediment basins weekly and after each rainfall event for excessive sediment buildup, undercutting flows or seepage, slope failure, settlement, and structural soundness. Regularly inspect water quality being discharged for suspended sediment and color. Identify and perform necessary repairs to improve water quality. Check downstream channel for erosion or sedimentation.

- Remove accumulated sediment whenever it reaches the designated cleanout level from one-fourth to one-third of the total sediment volume. The nominal volume of sediment (1/4 x 67 cubic yards = 17 cubic yards per acre) usually requires heavy equipment and good weather for sediment cleanout. Shovel by hand adjacent to outlet control structures to prevent equipment damage in this area. Dispose accumulated sediment at protected location onsite to prevent resuspension of sediment.

Limitations

- Sediment basins shall not be located in live or continuously flowing streams. Sediment basins may kill nearby vegetation by excessive sediment or by long periods of submergence.

- Sediment basins may not be effective for fine-grained soils such as silt or clay. Additional upstream erosion control measures are necessary.

- Sediment basins can be attractive and dangerous to children. Large deposits of sediment can act as "quicksand" to young children who may not have the strength to exit. Protective fencing or other access control measures for the project site are highly recommended. Sediment basins with steep slopes may be difficult for someone to exit.

References

8, 9, 30, 31, 32, 33, 34, 35, 43, 114, 135, 136, 141, 144, 162, 167, 179
(see BMP Manual Chapter 10 for list)

SAMPLE FIELD INSPECTION AND MAINTENANCE CHECKLIST

Name/Location of site: _____
Date: _____
Inspectors: _____
_____

- Inspect embankment slopes and crest for:
  - — Erosion_____
  - — Structural stability (slumping, bulging, sliding)_____
  - — Cracking (both longitudinal and lateral)_____
  - — Wet or soft spots or on lower downstream slope and toe area_____
  - — Discolored or muddy water seepage_____
  - — Uneven crest settlement (check if adequate freeboard above emergency crest)
    _____
- Inspect basin slopes for:
  - — Erosion_____
  - — Sliding or slumping_____
- Check amount of sediment in pond for cleaning_____
- Check baffles for structural soundness and holes or breaks_____
- Inspect trash rack and anti-vortex device for debris and blockage_____
- Inspect emergency spillway for obstructions_____
- Check emergency spillway entrance, channel way, and exit for significant erosion and scouring_____
- Check principal spillway outlet for excessive scouring and erosion_____
  _____
- Check all safety- and health-related facilities (warning signs, fences, etc.)_____
  _____
- Check for vandalism, especially around and inside principal spillway riser_____
  _____
- Inspect dewatering device for debris/silt clogging and structural integrity_____
  _____
- Inspect outside edge of outlet pipe for excessive seepage (i.e., flowing water) — look for discolored or muddy water along the sides as a sign of serious piping or pipe joint separation._____

Other comments and observations_____

_____

_____

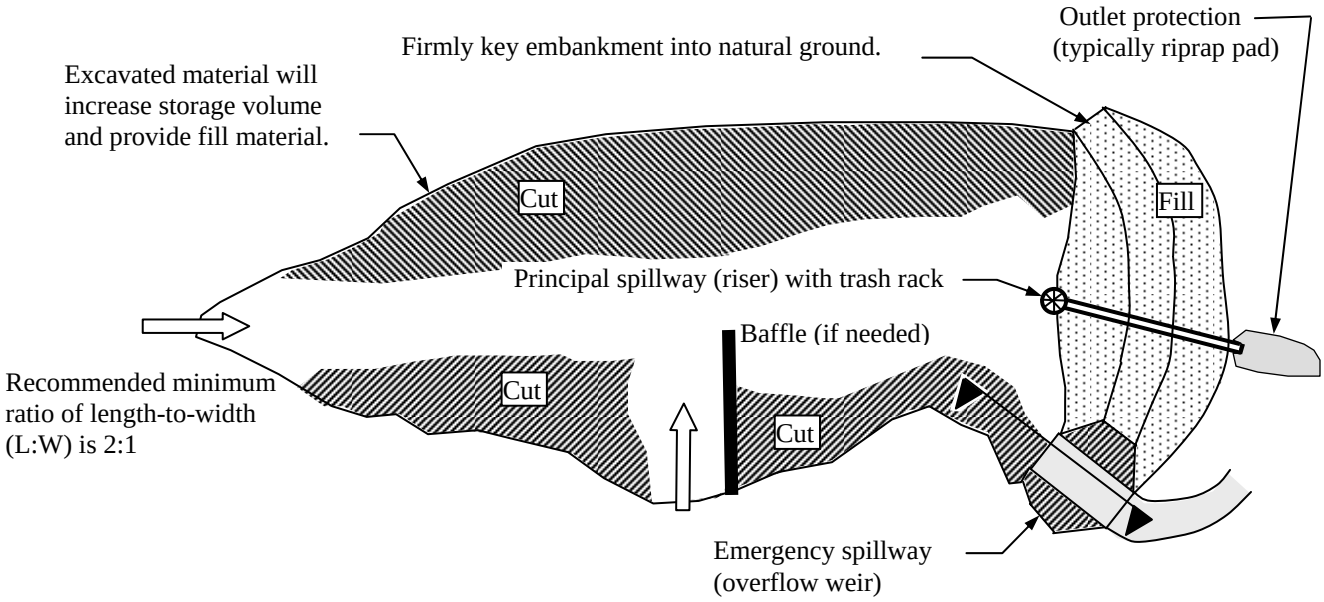

TYPICAL PLAN VIEW

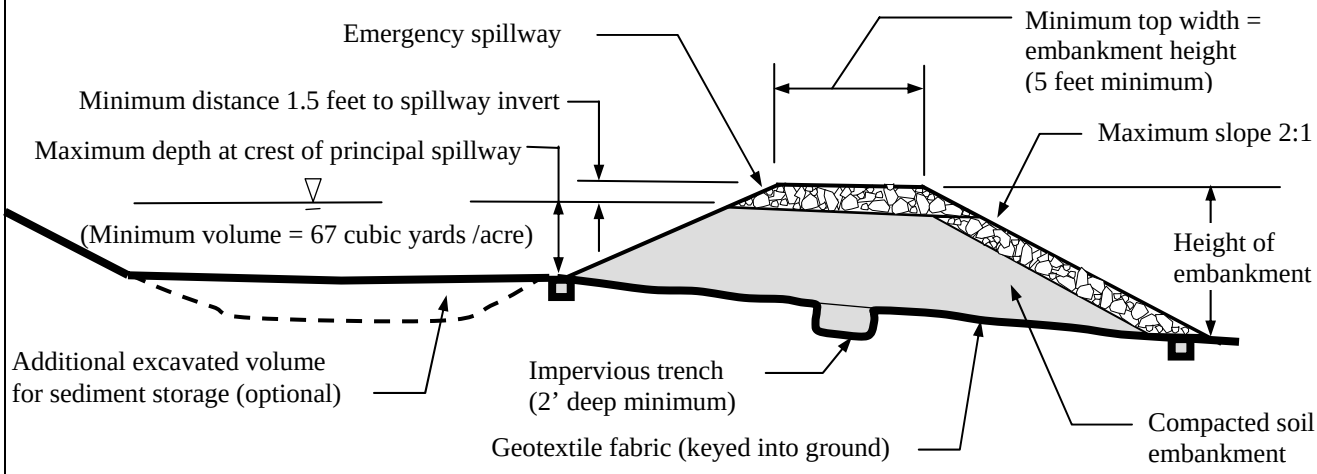

TYPICAL CROSS SECTION

NOT TO SCALE

Figure ES-19-1
Typical Sediment Basin

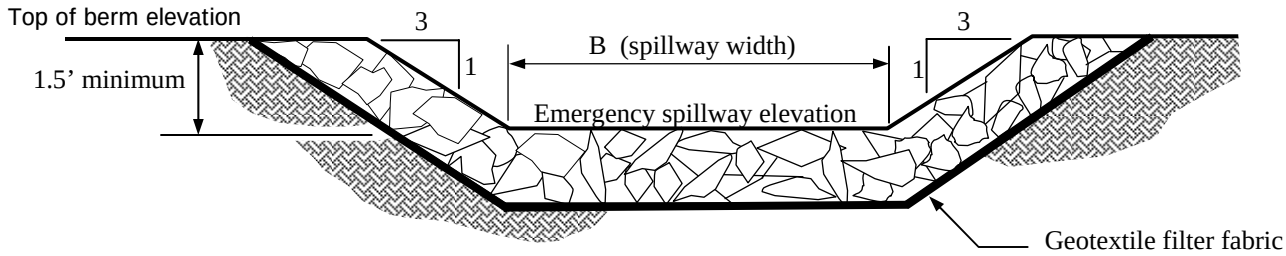

EMERGENCY SPILLWAY

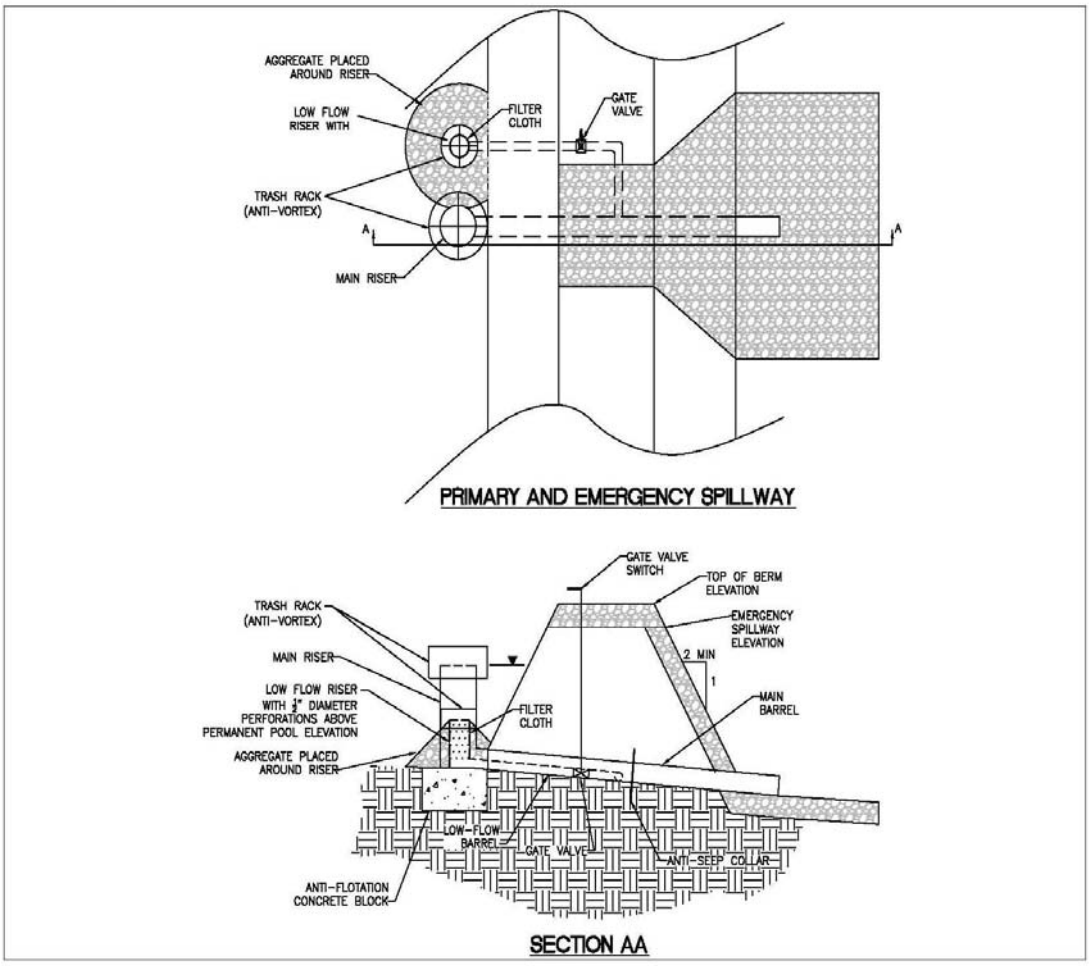

PRINCIPAL SPILLWAY (RISER AND PIPE)

NOT TO SCALE

Figure ES-19-2
Temporary Sediment Basin — Riser and Pipe Outlet

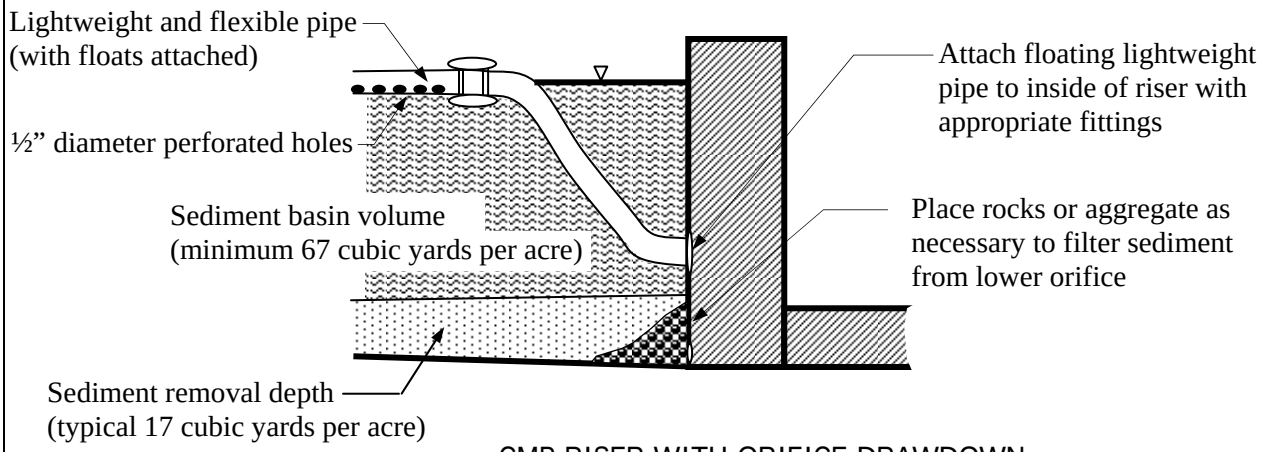

CMP RISER WITH ORIFICE DRAWDOWN

Notes:

1. The two details on this sheet suggest ways of modifying a permanent detention basin to serve as a temporary sediment basin. The basic methods shown here demonstrate a floating skimmer and geotextile filtration.

2. A permanent detention basin must always be designed by a professional engineer using hydrologic computations and different criteria than presented in this BMP. See ST-01 and ST-02 for detention basin design.

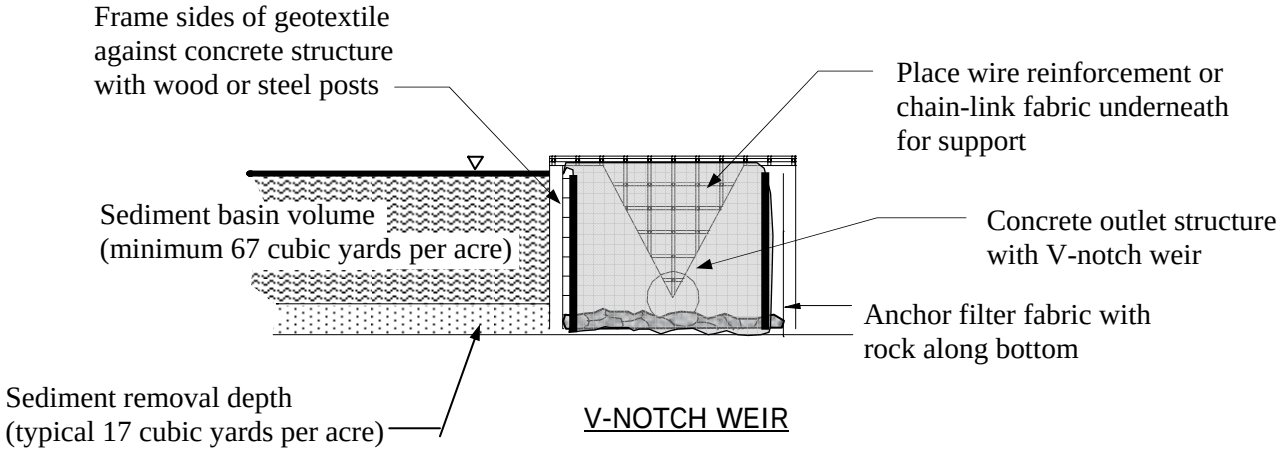

V-NOTCH WEIR

NOT TO SCALE

Figure ES-19-3
Possible Alterations to Permanent Detention Basin Outlet Structures

ACTIVITY: Bank Stabilization and Soil Bioengineering	ES – 20

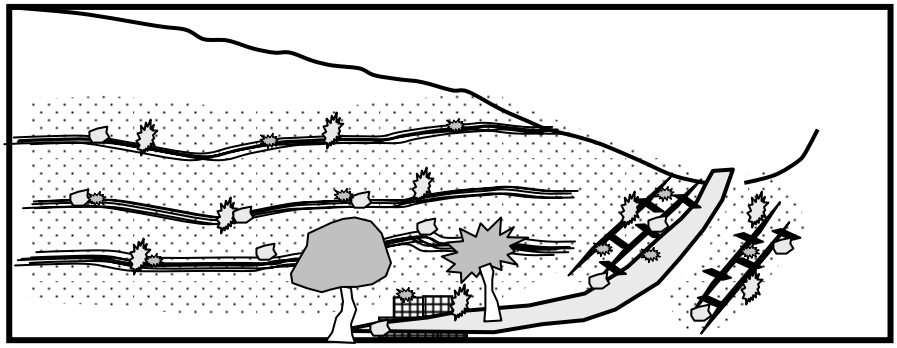

Targeted Constituents

● Significant Benefit		◗ Partial Benefit	○ Low or Unknown Benefit	
● Sediment	○ Heavy Metals	○ Floatable Materials	○ Oxygen Demanding Substances	
○ Nutrients	○ Toxic Materials	○ Oil & Grease	○ Bacteria & Viruses	○ Construction Wastes

Description

Provide slope stabilization, protection, vegetative cover, and erosion reduction through the use of woody vegetation structures alone or in combination with simple retaining structures. This practice is likely to create a significant reduction in sediment.

Suitable Applications

- Protection of steep slopes against surface erosion and shallow mass wasting.
- Protection of earth embankments and for repairs of small gullies.
- Along streambanks and other channels that are experiencing erosion. Any work along a stream or within a stream must be approved by the Tennessee Department of Environment and Conservation (TDEC) prior to construction.
- Wherever trees, shrubs, and dense non-landscaped vegetation may be desired.

Approach

At some locations it is very difficult to establish vegetation. Steep slopes that are subject to weather from prevailing storm patterns are a primary example. It is difficult to plant trees and shrubs on a steep slope in order to establish a stable ground cover. Streambanks are also subject to erosion and severe stresses, for which grass and other vegetation may not be sturdy enough. The techniques in this BMP are generally for slope stabilization; design of stream habitats and vegetation is a lengthy subject for which expert advice and extensive regulatory review is needed. Due to the highly erodible Memphis loess soils, some techniques (such as crib wall) do not work.

Bank and slope stabilization can be accomplished using woody materials that are placed in an alternative manner other than planting in a specially prepared

hole using nursery stock (as in ES-10, Trees, Shrubs, and Vines). The use of native plant materials can also be accomplished using live roots, branches, and cuttings. Traditionally willow plants have been used near streams, due to quick sprouting and growth characteristics.

Bank stabilization and soil bioengineering can be incorporated into a standard retaining wall design such as a crib wall or gabion wall by adding live branches and cuttings. A retaining wall is an engineered structure with calculated loads and stresses that are used in material selection and design. Retaining walls must be designed by a professional engineer in accordance with stability calculations, by examining all possible combinations of live loads and dead loads. Adding vegetation to a retaining wall may or may not affect structural stability in the future. A project designer should carefully consider all potential issues of retaining walls during conceptual design.
Site Considerations

- Observe surrounding slopes for types of vegetation, vegetation density, and overall plant health. Also observe the directions that nearby slopes are facing. For instance, some plantings generally do better on an eastern exposure and do not survive in a southern exposure. Plant health is a good indicator of soil types and conditions (including moisture).

- Make geologic observations of project site and nearby slopes, noting soil types and any types of failure such as sliding or rotating. Look for groundwater or wet soils. Consider potential freeze/thaw conditions that may contribute to slope failure.

- Retain existing vegetation whenever possible. Limit removal of vegetation by keeping the cleared area to the smallest practical size, limiting duration of the surface disturbance, and retaining existing woody vegetation for future planting.

- Stockpile and protect topsoil removed during clearing. Protect areas exposed during construction with temporary erosion and sediment control practices.

General Installation Techniques

- Grade or terrace a slope in order to eliminate possible failure by sliding or rotating. Flatten slopes to reduce potential slumping or undercutting from storm water flows.

- Installation of bank stabilization methods is best accomplished in late fall at onset of plant dormancy. Plants that are not dormant are less likely to survive. Bank and slope stabilization plantings will not typically take full effect in slowing erosion for at least a year. Temporary or permanent grass seeding may be necessary.

- Keep fresh cuttings and branches moist. Store in a cool place away from direct sunlight. Backfill soil material should have sufficient fine soils and proper drainage depending on the type of vegetation selected. Soil may need lime or slow-release fertilizer in moderate amounts in order to support vegetation.

Live Stakes

Live stakes are the insertion of live, rootable vegetative cuttings into the ground. Live stakes are an appropriate technique for repair of small earth slumps that are frequently wet. Or they can be used to supplement other types of bank stabilization plantings. Live stakes can also be installed through existing riprap or other aggregate materials, allowing a stabilized riprap location to eventually have natural vegetation.

Live stakes are usually 0.5 to 1.5 inches in diameter and approximately 2 to 3 feet in length. Typical spacing is 2 to 3 feet apart. The basal end (or root) is cut to an angled point for easy insertion. The top should be cut square. Willow branches have historically been specified for use as live stakes and are well-suited to the purpose. Other types of tree branches may be selected, depending on soil type and available moisture conditions, such as ash, alder, elm, or dogwood.

Gently tamp the live stake into the ground at right angles to the slope. Approximately 80 percent of the live stake length should be installed into the ground. Pack soil firmly around live stake after installation. Do not split the stakes during installation; stakes that split should be removed and replaced. An iron bar can be helpful in establishing a pilot hole for the live stake.

Live Fascine Bundles

A fascine is defined as a bundle of sticks or branches, tied together and used for a definite purpose such as preparing a primitive house, fort, or other structure. A live fascine is defined as a bundle containing live branch cuttings bound together into sausage-like structures, and then placed to provide slope stability or prevent erosion.

Live branch cuttings should be from species that easily root and have long, straight branches. Cuttings are tied together to form live fascine bundles that vary in length from 5 to 30 feet, depending on site conditions and limitations in handling. The completed bundles should be 6 to 8 inches in diameter, with all of the growing tips oriented in the same direction. Stagger the cuttings in the bundles so that tops are evenly distributed throughout the length of the uniformly sized live fascine.

Both live stakes and dead stakes are used to install fascine bundles. Stakes should be at least 2.5 feet long on cut slopes and at least 3 feet long on

fill slopes. Dead stakes can be constructed from untreated 2x4 lumber with a minimum length of 2.5 feet. A diagonal cut across the 2x4 lumber will assist in creating stakes quickly.

Prepare the live fascine bundles and live stakes immediately before installation. Begin at the base of the slope and work upwards. Dig a trench along a level contour just deep enough to contain the live fascine bundle. A typical trench size is 12 to 18 inches across and also 6 to 8 inches deep. Place the live fascine bundle into the trench.

Drive dead stakes directly through the bundle every 2 to 3 feet to securely fasten it. Extra stakes should be used at connections and overlaps. Leave the top of stakes flush with the installed bundle. Live stakes are generally installed on the downslope side of the bundle. Drive the live stakes below and against the bundle between the previously installed dead stout stakes. The live stakes should protrude 2 to 3 inches above the top of the live fascine. Place moist soil along the sides of the live fascine. The top of the fascine should be slightly visible when the installation is completed as shown in Figure ES-20-1. Place straw or similar mulching material between rows. Slopes steeper than 3:1 may need erosion control matting or some type of mesh to prevent erosion. Recommended maximum slope lengths for live fascine bundles are:

Slope (H:V)			Maximum Slope Length
1:1	to	1.5:1	15 feet
1.5:1	to	2:1	20 feet
2:1	to	2.5:1	30 feet
2.5:1	to	3:1	40 feet
3:1	and	flatter	50 feet

A willow mattress (also called a brush mattress) is similar to a fascine roll. Willow branches and cuttings are formed into a layered arrangement approximately 4 to 6 inches thick and then tied with twine or string. Excavate an anchor trench along the bottom of the willow mattress to a depth of 3 inches, to prevent downhill sliding. Loosen the subgrade soil throughout the mattress installation location; add lime and slow-release fertilizer as needed. A willow mattress is anchored onto a slope by using dead stout stakes and twine. Place 4 to 6 inches of fertile soil upon the willow mattress and tamp firmly.

Branchpacking

Branchpacking (a descriptive name for this method) consists of alternating layers of live branch cuttings and compacted backfill to create bank stabilization vegetation. It is often used to repair small localized slumps, gully washouts, or other small areas where the slope needs to be stabilized. Branchpacking can

also be adapted as a method for planting an entire slope (see description below for brushlayering).

Live branch cuttings may range from 1/2 inch to 2 inches in diameter. Cuttings should be long enough to touch the undisturbed soil at the back of the trench. Wooden stakes (typically made from 2x4 lumber, untreated) are 5 feet or longer, depending on the depth of the hole and field conditions. Starting at the lowest point, drive the wooden stakes vertically 3 to 4 feet into the ground, at a typical spacing of 1 to 2 feet apart.

Place a 6-inch layer of live branch cuttings in the bottom of the hole or trench, between the vertical stakes and perpendicular to the slope face (as shown in Figure ES-20-2). Cuttings should be placed in a crisscross configuration with the growing tips generally oriented toward the slope face. Most branch basal ends should touch the back of the hole or slope. Each layer of branches is followed by a layer of compacted soil, typically 6 to 8 inches thick, to ensure soil contact with the branch cuttings. Final grade should match the existing slope, and branches should protrude slightly from the filled face. The soil should be moist so that the live branch cuttings do not dry out.

Branchpacking may not be effective in slumped areas or gullies that are greater than 5 feet wide. Examine the slope closely to determine the cause of slumped areas and gullies. Wet soils, inadequate drainage, excessive storm water runoff or other site conditions may require additional solutions.

Brushlayering is a variation of branchpacking suitable for gentle slopes with only a moderate potential for erosion. The live branch cuttings are oriented perpendicular (up and down) to the slope level contours, installed in a trench or cut slope, and then covered with soil as before. The difference is that the soil for each downhill trench comes from the next excavated trench immediately uphill. The presence of branch cuttings in the soil will limit the amount of compaction that can be obtained on a slope, so that additional erosion control measures may be necessary. Straw mulch, temporary seeding, jute mesh, and erosion control mats may be necessary, particularly for slopes steeper than 3:1. Avoid slopes steeper than 2:1 and generally limit slope lengths to 20 feet or less.

Vegetated Crib Wall

Due to the highly erodible loess soils in Memphis, crib walls do not work well. However, on a site-specific basis, there is potential for the BMP to be effective. A crib wall is a retaining wall created by a hollow, box-like, interlocking arrangement of structural members. A retaining wall is an engineered structure, with calculated loads and stresses used for the material selection and design. Crib walls made from prefabricated metal or reinforced concrete beams can be designed as very tall retaining walls that can handle large surcharge loads and traffic impacts; these types of crib walls must be designed by a

professional engineer. Crib walls are filled with compacted soil or gravel, with provisions for subsurface drainage.

Adding vegetation may or may not affect structural stability of a retaining wall in the future. It would certainly affect large structural crib walls, but should not impact small crib walls such as the type shown in Figure ES-20-3 for a relatively short height using untreated logs or timber. The structure is filled with suitable backfill material and layers of live branch cuttings that will root inside the crib structure and extend upward into the slope or outward into the wall face. This technique is appropriate at the base of a slope where a low wall may be required to stabilize the toe.

Live branch cuttings should be long enough to reach the back of the wooden crib structure. Logs or timbers are usually 6 inches in diameter or thickness. Large nails or rebar are required to secure the logs or timbers together. Place foundation of wall 2 to 3 feet below grade, as shown on Figure ES-20-3.

Place the first course of logs or timbers at the front and back of the excavated foundation, approximately 4 to 5 feet apart. Place the second course of logs or timbers at right angles (perpendicular to the slope) on top of the previous course to overhang the front and back of the previous course by 3 to 6 inches. Repeat course in same manner and nail to the preceding course with nails or reinforcement bars. When the crib wall structure reaches the existing ground elevation, place live branch cuttings on the backfill perpendicular to the slope. Then cover the branch cuttings using fertile soil as backfill and compact firmly.

Vegetated Gabion Wall

A gabion is a wire basket, usually galvanized or with plastic coating, designed to hold and retain rock, riprap, aggregate, etc. The wire baskets come in standard rectangular sizes with one or more compartments. A typical gabion has triple-twisted, hexagonal mesh with openings of 1 inch more or less, depending on the type of rock that is being retained. Empty gabions are usually delivered flat to the project site, assembled, placed into position, wired to adjoining gabions, filled with stones, and folded shut and wired at the ends and sides.

Gabion walls can be used as a designed retaining wall, with certain estimated properties and the ability to resist surcharged loads. Gabion walls that are more than 4 feet tall or that are located in critical areas need to be designed by a professional engineer. Follow gabion manufacturer's recommendations and design guidelines in designing a gabion wall.

Since a gabion wall does not contain soil as part of its structure, the live branch cuttings are typically extended through the gabions to the backfilled soil behind the wall (as shown on Figure ES-20-4). Live branches are placed on each

consecutive layer between the rock-filled baskets. Eventually the roots will take hold in the backfilled soil and will also help to consolidate the structure and bind it to the slope.

Vegetated Rock Wall

A vegetated rock wall can be constructed to take advantage of live cuttings to stabilize a very low embankment or at the base of a gentle slope. The rock wall can constructed with or without mortar, depending on the types of rocks and the skill of the rock masons involved. Additional erosion control measures such as straw mulch, temporary seeding, jute mesh, and erosion control mats may be necessary. A retaining wall more than 4 feet high must be designed and analyzed by a professional engineer, particularly in applications that could endanger health or property.

Live cuttings should be long enough to reach the undisturbed soil behind the wall. Rock sizes normally range from 8 to 24 inches in diameter, with larger boulders used for the base. Excavate and construct a stable foundation 2 to 3 feet below existing grade as shown on Figure ES-20-5. Drainage considerations may require weepholes or other methods to remove moisture and to prevent frost damage. Provide subsurface drainage if the water table is above the wall foundation, or if the retaining wall is adjacent to impervious surfaces such as parking lot.

Place rocks with at least three contact points bearing on the layer below. Place rocks so that the center of gravity is as low as possible, with the long axis slanting inward toward the slope if possible.

Limitations

- Streams and streambanks should not be disturbed or modified unless permission is granted by the City of Memphis and Shelby County Engineering Department and TDEC. Permits must be obtained from TDEC prior to any work within or along any stream.
- Constraints on planting times or availability of suitable plant materials during the allowable planting times may limit soil bioengineering methods.
- Rapid vegetative establishment may be difficult on extremely steep slopes. Rocky or gravelly slopes can lack sufficient fines or moisture for plant growth.
- Soil bioengineering and bank stabilization methods take considerable time and effort to accomplish. Other methods, such as hydroseeding and the use of erosion control mats, may be much cheaper and quicker.

Maintenance

- During the two weeks of the establishment period, inspect cuttings daily and replace any dead vegetation with fresh stock. Inspect biweekly for the first two months, looking for insect infestations, inadequate soil moisture,

and other conditions that could lead to poor survivability. Take immediate action to remedy any site conditions as warranted.

- Inspect monthly for the next 22 months. Extra inspections should be conducted during periods of drought or heavy rains. Systems that are not in acceptable growing condition should be noted and, as soon as seasonal conditions permit, should be removed from the site and replaced with materials of the same species and sizes as originally specified. Repair damaged sections immediately.

- Final inspection – A final inspection should be held 2 years after installation is completed. Healthy growing conditions include assessment of overall leaf development and the rooted stems. Growth should be continuous with no open spaces more than 2 feet. The following list has a typical rate for each type of planting, particularly when good techniques and preparation have been used.

Live stakes ----------	At least 75% growing
Live fascines ----------	At least 50% growing
Branch packing (repairs) ----------	At least 50% growing
Vegetated crib wall ----------	Approx 50% growing
Vegetated gabion wall ----------	Approx 50% growing
Vegetated rock wall ----------	Approx 50% growing

References **30, 82, 124, 141, 155, 162, 167, 179** (see BMP Manual Chapter 10 for list)

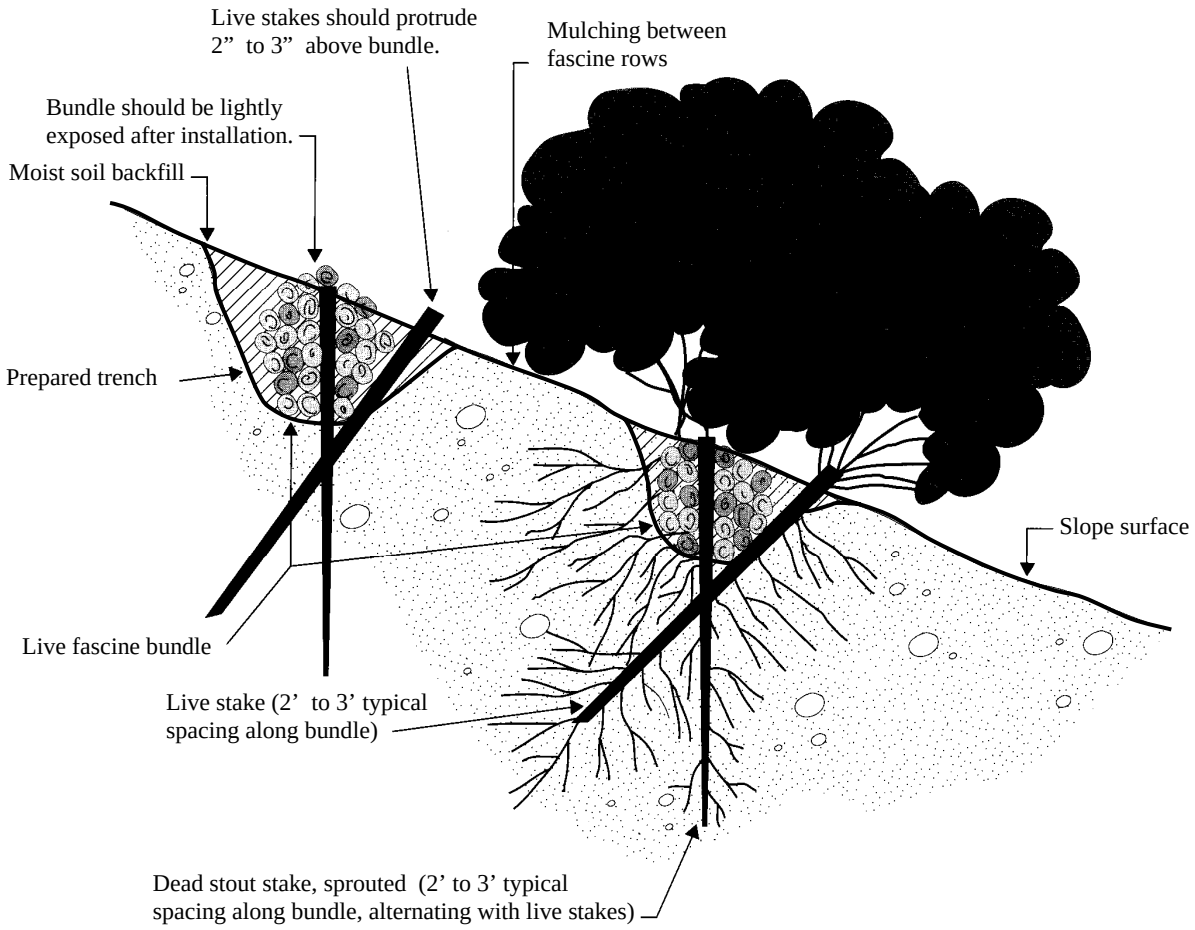

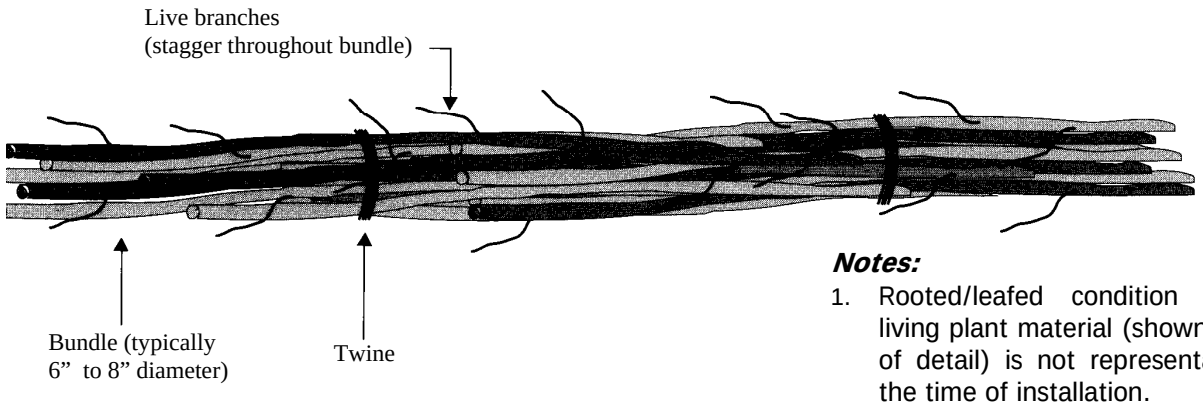

NOT TO SCALE

Figure ES-20-1
Live Fascine Details

Notes:

1. Rooted/leafed condition of the living plant material (shown in part of detail) is not representative of the time of installation.
2. Use a combination of live stakes and dead stakes to anchor fascine bundles.

Notes:

1. Rooted/leafed condition of the living plant material (shown in part of detail) is not representative of the time of installation.

2. Branch packing locations are typically for small repairs of a slope or gully. Carefully examine site conditions to determine cause of needed repair, such as wet soils or excessive storm water runoff, before conducting repairs.

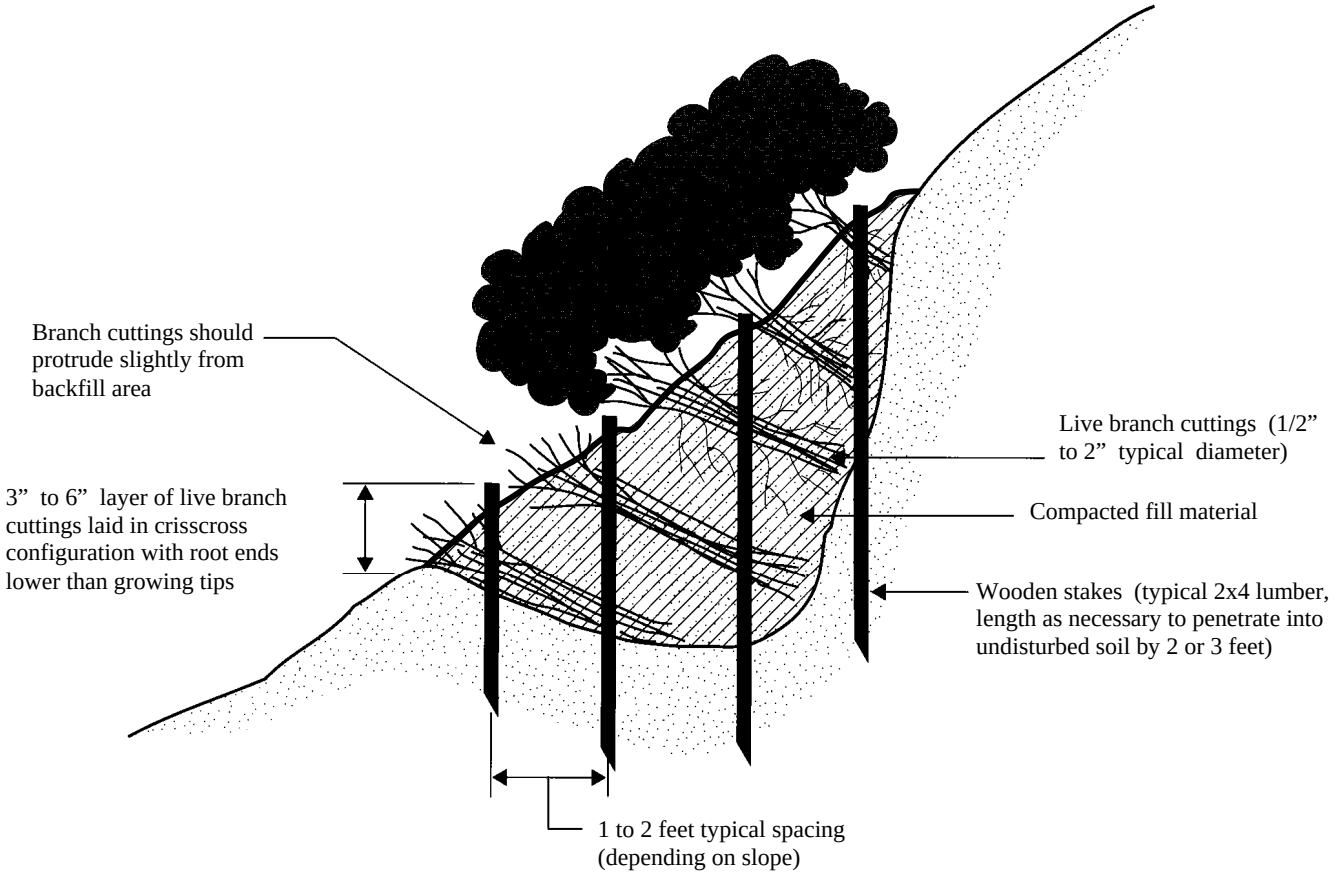

NOT TO SCALE

Figure ES-20-2
Branch Packing Details

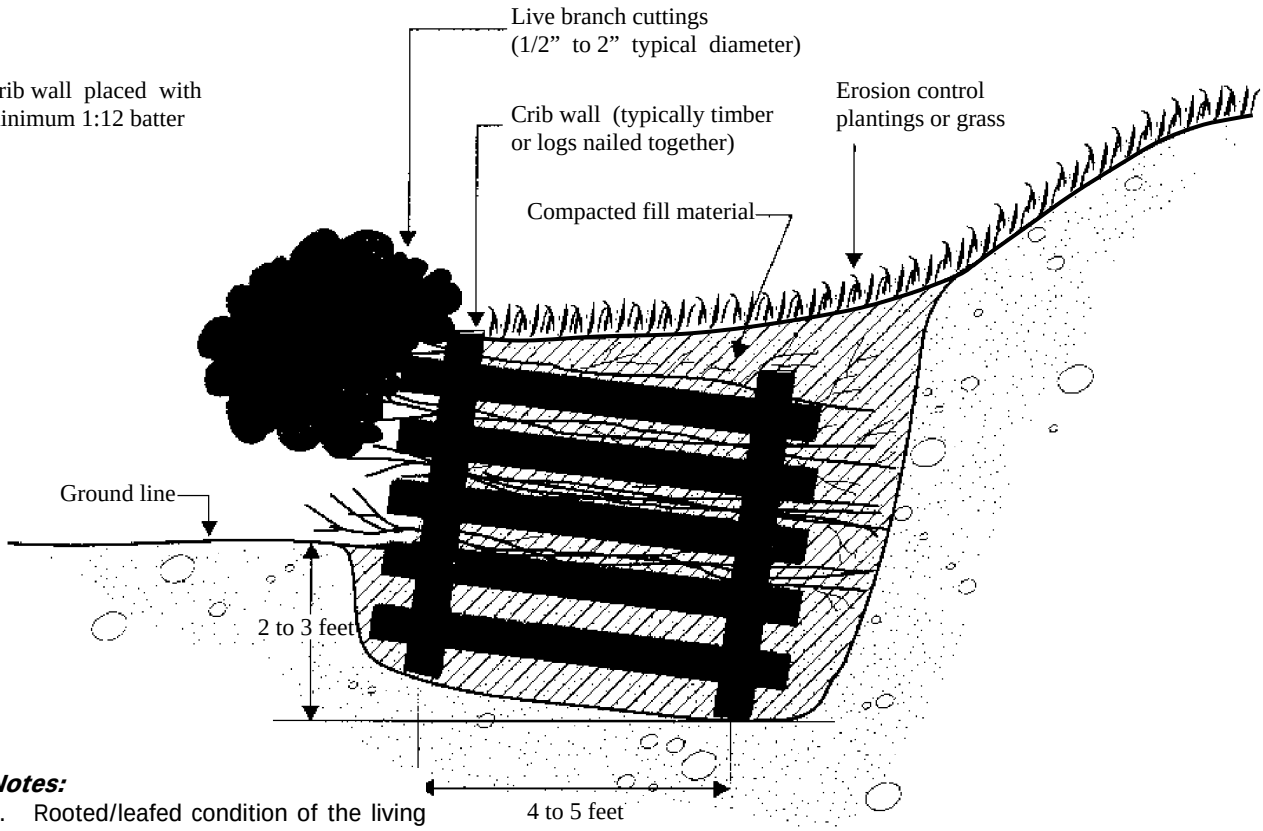

Notes:

1. Rooted/leafed condition of the living plant material (shown in part of detail) is not representative of the time of installation.

2. Crib walls are typically an engineered structure with calculated loads and stresses used in the material selection and design. Adding vegetation to the crib wall may or may not affect structural stability. Consult a professional engineer for walls at the base of steep slopes. Retaining walls over 4' high must be designed by a professional engineer. Due to area soils, crib walls may be difficult to employ.

NOT TO SCALE

Figure ES-20-3
Vegetated Cribwall

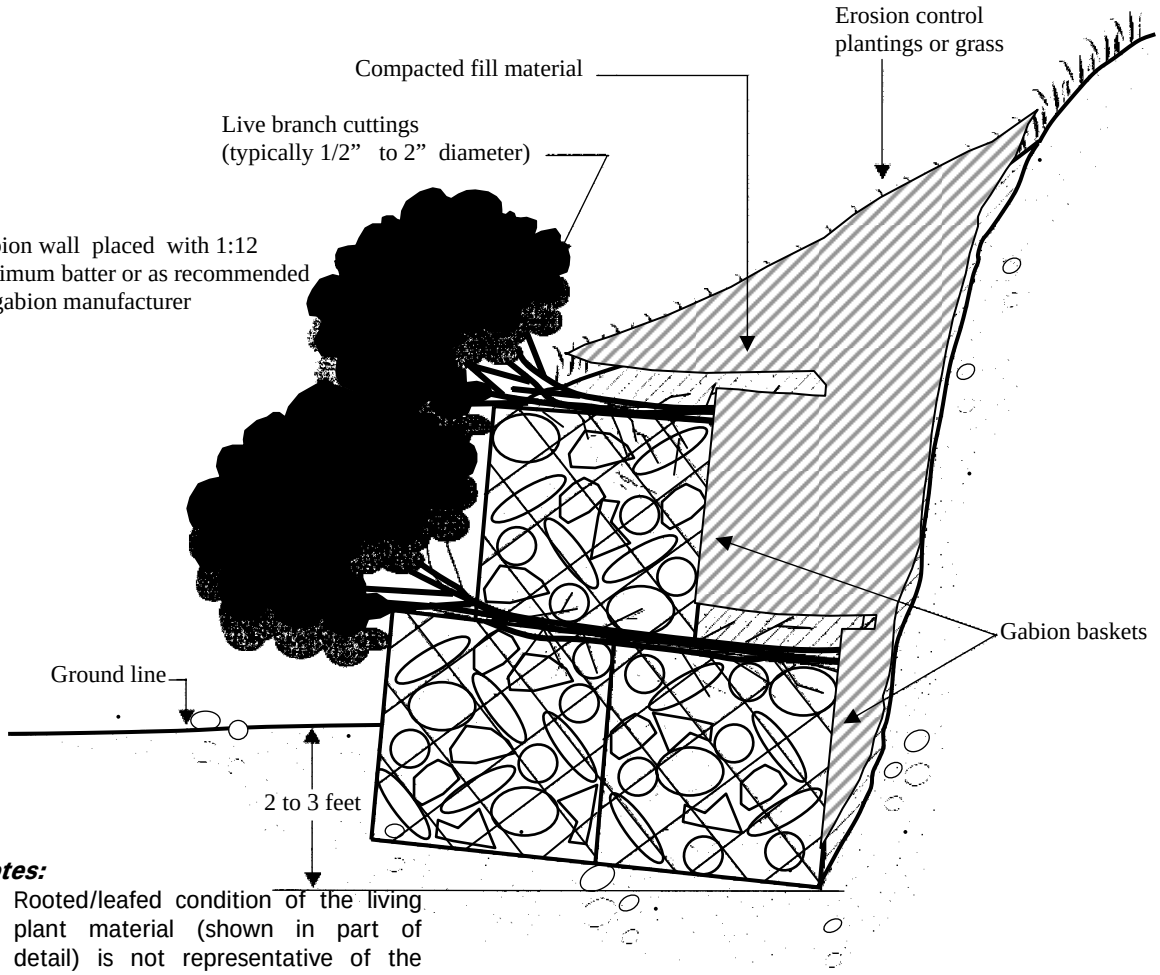

Notes:

1. Rooted/leafed condition of the living plant material (shown in part of detail) is not representative of the time of installation.

2. Gabion walls are typically an engineered structure with calculated loads and stresses used in the material selection and design. Adding vegetation to the gabion wall may or may not affect structural stability. Consult a professional engineer for walls at the base of steep slopes. Retaining walls over 4' high must be designed by a professional engineer.

NOT TO SCALE

Figure ES-20-4
Vegetated Rock Gabion

Notes:

1. Rooted/leafed condition of the living plant material (shown in part of detail) is not representative of the time of installation.

2. Retaining walls are typically an engineered structure with calculated loads and stresses used in the material selection and design. Adding vegetation within a rock retaining wall may or may not affect structural stability. Consult a professional engineer for walls at the base of steep slopes. Retaining walls over 4' high must be designed by a professional engineer.

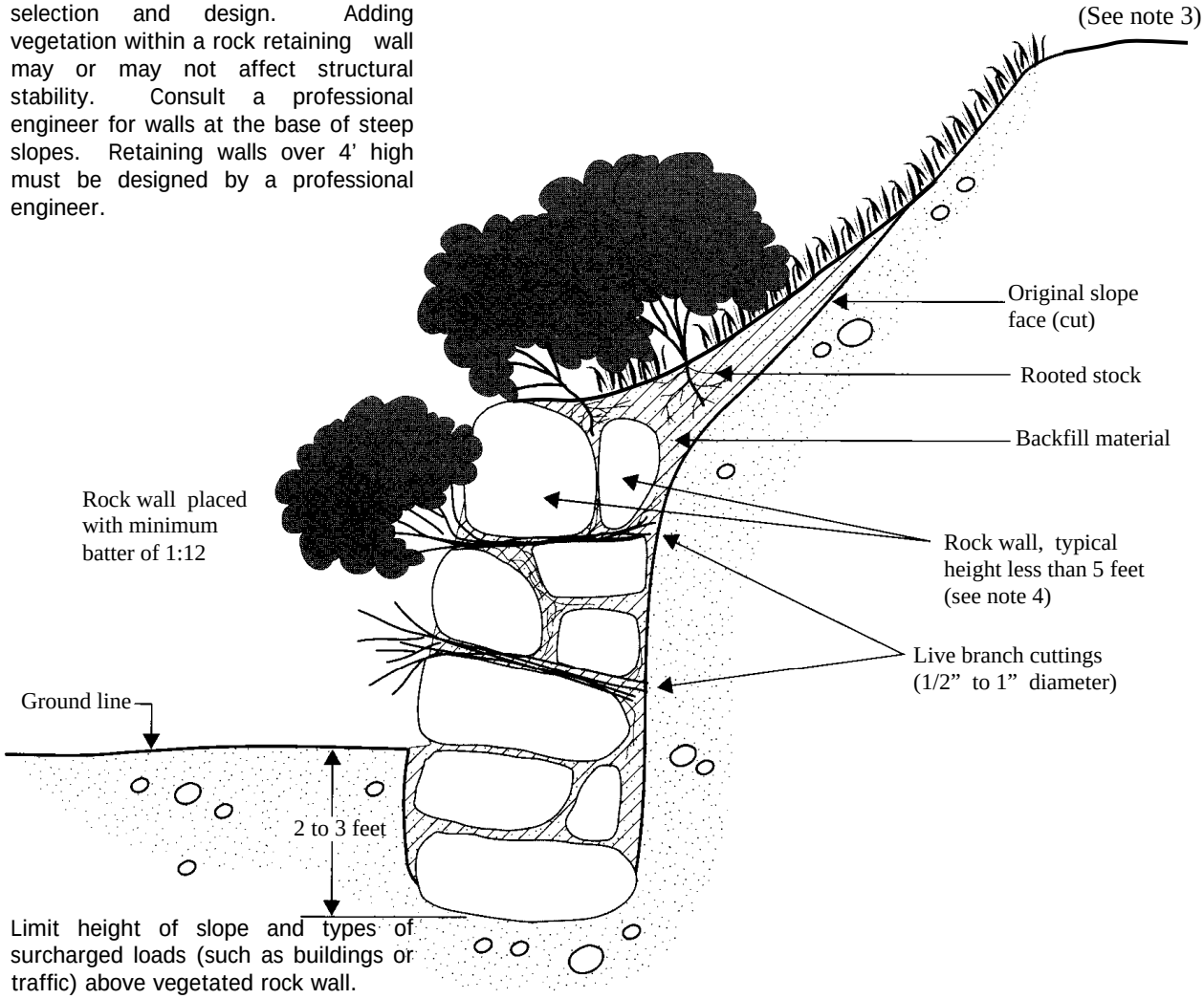

3. Limit height of slope and types of surcharged loads (such as buildings or traffic) above vegetated rock wall.

4. Rock wall may be constructed with or without mortar. Subsurface drainage (such as a gravel drainage layer or weep holes) should be considered in design.

NOT TO SCALE

Figure ES-20-5
Vegetated Rock Wall

ACTIVITY: Diversions and Downdrains	ES – 21

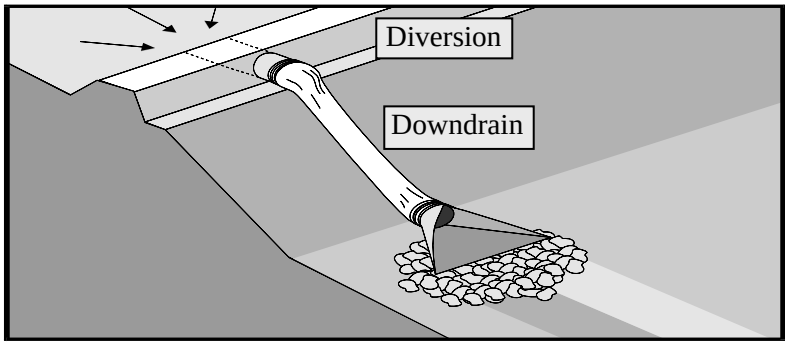

Targeted Constituents

● Significant Benefit ◗ Partial Benefit ○ Low or Unknown Benefit

● Sediment	○ Heavy Metals	○ Floatable Materials	○ Oxygen Demanding Substances	
○ Nutrients	○ Toxic Materials	○ Oil & Grease	○ Bacteria & Viruses	○ Construction Wastes

Description

Temporary diversions and downdrains divert storm water runoff from upstream stabilized areas around the construction site and other disturbed areas, preventing offsite storm water from causing erosion on slopes. Diversions also may be used to collect storm water from disturbed areas and direct runoff into sediment basins or traps. The primary function of diversion channels and downdrains is to minimize sheet flow over slope surfaces and convey collected runoff to a sediment-removing structure or a protected drainage system, as appropriate. This practice will significantly reduce sediment.

Suitable Applications

- Diversions are appropriate upslope from a disturbed area to prevent offsite storm water runoff from eroding the disturbed area.
- Diversions are appropriate downslope from a disturbed area to convey storm water runoff to a sediment trap, sediment basin, or other sediment-capturing device.
- Diversions may also be used at material storage areas, equipment maintenance and fueling areas, or other areas where runoff may have contaminants or pollutants.
- Diversions can be placed in the middle of a long slope or at other areas within the project site to reduce slope lengths and the potential quantity of soil erosion.
- Diversions can be located to protect adjacent property and buildings from potential damage from storm water runoff.
- Downdrains are used to convey storm water runoff from the top of a slope to the bottom of a slope in a safe manner so that slope erosion does not occur.

Approach

Diversions and downdrains are essential in keeping erosion and sediment confined to the disturbed portions of a construction site. It is beneficial to stabilize disturbed areas as soon as possible and to prevent storm water from traversing disturbed slopes. Diversions and downdrains do not remove sediment from runoff, but they are needed to control storm water during construction and, if properly designed by a professional engineer, as part of the permanent drainage system.

Temporary diversion channels need to be sized adequately (typically 5-year or 10-year design storm) with a channel lining that will resist the design flows and velocities. Temporary downdrains should be designed to handle diverted flows without excessive ponding at the entrance and without excessive exit velocities. The downdrain outlet will typically require large sizes of riprap, splash blocks, energy dissipaters, or other types of structures (see ES-25, Outlet Protection).

Slopes that are formed during cut and fill operations should be protected from erosion. Diversions and swales at the top of the slope divert runoff to a location where it is safely conveyed to the bottom of slope. Install diversion and downdrain structures when the site is initially graded; remove them after disturbed areas are permanently stabilized.

Other BMPs that also protect slopes from erosion and storm water runoff include:

ES-14 — Silt Fence	ES-16 — Sandbag Barrier
ES-15 — Straw Bale Barrier	ES-17 — Brush or Rock Filter Berm

Temporary Diversions

Diversion channels must not adversely impact adjacent properties. Once stabilized with temporary vegetation or linings, diversions require relatively little maintenance. Diversions are relatively inexpensive to install since they are formed as part of the initial grading operations, while heavy equipment is still operating at the site. Earthen dikes and diversions can be easily constructed by one or two passes of a bulldozer or grader, and then compacted by a few passes of the same tracked or wheeled equipment. See Figure ES-21-1 for a typical grading detail.

Select design flows and safety factors based upon careful evaluation of risks from overtopping, backwater or ponding, washouts, scour, or erosion. High flow velocities may require the use of a lined ditch or other means of control. Generally, diversion channels and swales should not radically alter predevelopment flow patterns. A typical grass diversion swale is placed with 1 percent slope and maximum slope of 3 percent.

Remove all trees, stumps, obstructions or other objectionable material from the path of the diversion channel or swale. Grade the disturbed areas and compact

fill material as necessary. Stabilize all diversions and swales immediately using erosion control matting, mulch, geotextiles, etc. Construction equipment may cross a diversion or swale at designed locations that have reinforced materials or a culvert.

Temporary Downdrains

Downdrains can be placed either on top of a slope or buried underneath the slope surface. Downdrains placed on top of a slope will need to be anchored more securely than buried downdrains. Use anchors to hold pipes together, in addition to the normal pipe connections used for particular pipe materials (coupling bands, slip-on connections, bolts, or screws). See Figure ES-21-2 for typical downdrain details.

When using temporary downdrains without formal drainage computations, limit the tributary area to 2 acres per pipe. For larger areas, use a rock-lined channel or a series of pipes. Maximum slope of a downdrain may not be more than 2:1 (H:V) and should preferably be as flat as possible to reduce the need for energy dissipation measures.

Downdrains in critical areas should be substantially overdesigned and may also incorporate an emergency overflow section or bypass. If a downdrain conveys sediment-laden storm water, then direct flows to a sediment trap or sediment basin.

Install downdrains perpendicular to slope contours, unless forces on a downdrain pipe are properly computed to resist movement. Compact soil at downdrain pipe inlet and outlet, and throughout the length of pipe. Securely anchor pipe and appurtenances into ground. Check to ensure that all pipe connections are watertight. Protect downdrain inlet and outlet by installing a flared-end section, riprap, concrete, geotextile filter fabric, or energy dissipating devices.

Maintenance

- Inspect diversions and downdrains after each rainfall, and weekly until the tributary drainage area has been stabilized. Remove built-up sediment and debris from entrances and outlets as required. Flush drains if necessary; capture and settle out sediment from discharge.

- Inspect outlet for erosion and downstream scour. If eroded, repair damage and install additional energy dissipation measures. If downstream scour is occurring, it may be necessary to reduce flows being discharged into the channel unless other preventive measures are implemented.

Limitations

- Temporary diversions or berms should not be used for drainage areas greater than 2 or 3 acres, or along slopes greater than 10 percent. Earthen dikes and diversions must be stabilized immediately. Use materials and soils that are not subject to erosion. Earthen dikes and diversions may become barriers to construction equipment and materials being transported.

- Temporary diversions, downdrains, swales, or any other runoff should not adversely impact upstream or downstream properties. Diverted storm water may cause downstream flood damage if not properly controlled or evenly distributed.

- Severe erosion may result when downdrains fail by overtopping, pipe separation or collapse, piping within surrounding uncompacted soil, slippage or sliding, or other type of damage. Subsurface drains may remove fine soils, which can result in collapse of the slope.

References

5, 8, 9, 30, 33, 34, 35, 43, 54, 114, 141, 144, 162, 167, 179 (see BMP Manual Chapter 10 for list)

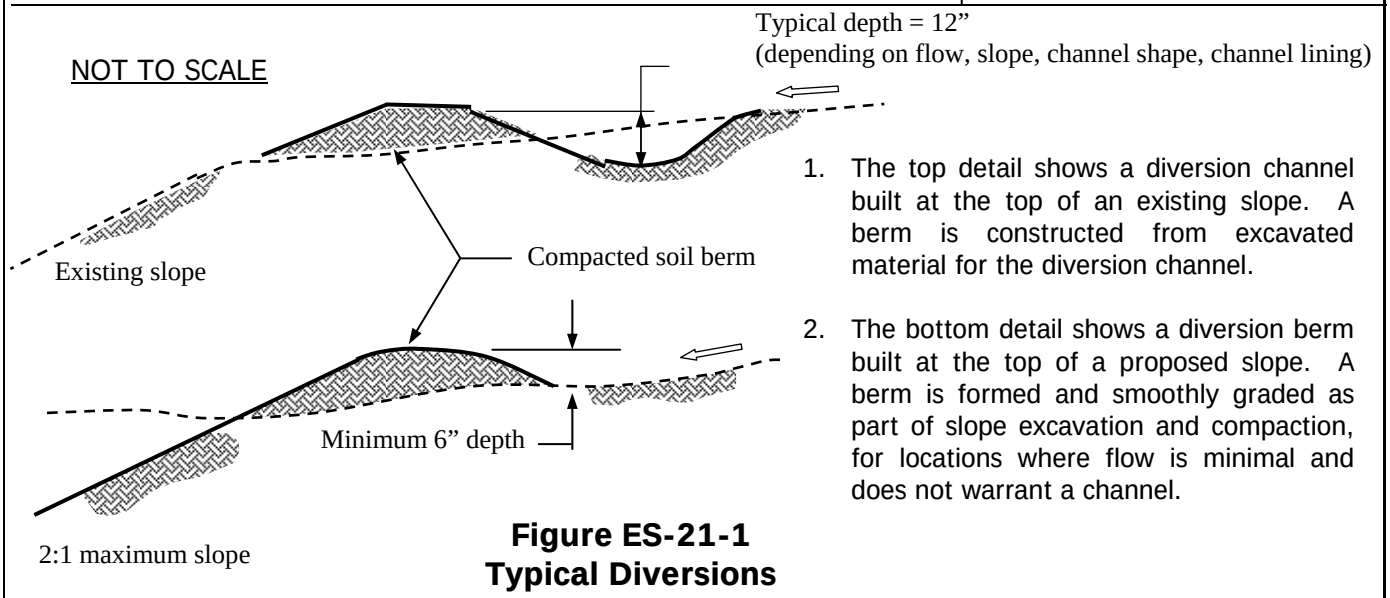

Figure ES-21-1
Typical Diversions

1. The top detail shows a diversion channel built at the top of an existing slope. A berm is constructed from excavated material for the diversion channel.

2. The bottom detail shows a diversion berm built at the top of a proposed slope. A berm is formed and smoothly graded as part of slope excavation and compaction, for locations where flow is minimal and does not warrant a channel.

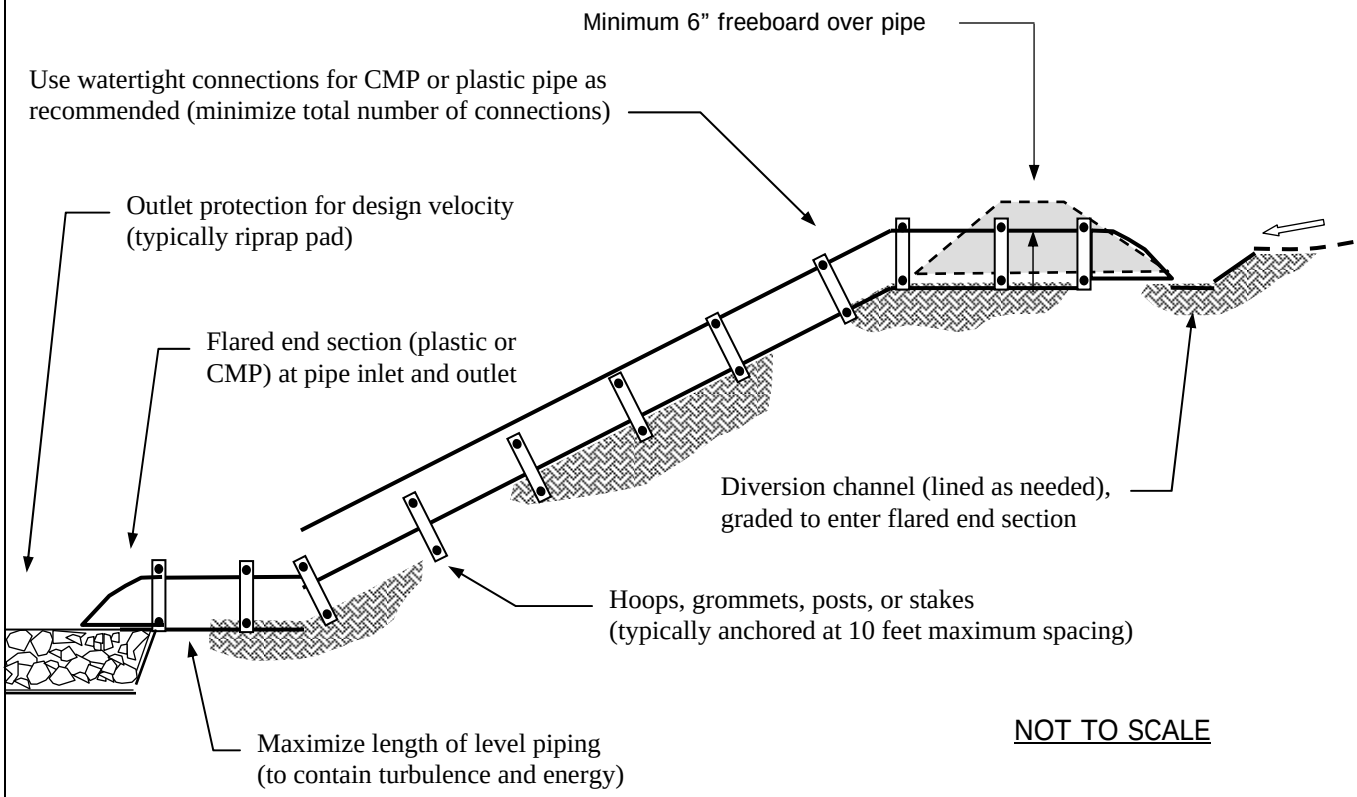

NOT TO SCALE

Diameter of downdrain pipe	Maximum drainage area
10”	0.30 acres
12”	0.50 acres
15”	0.75 acres
18”	1.00 acres
21”	2.00 acres

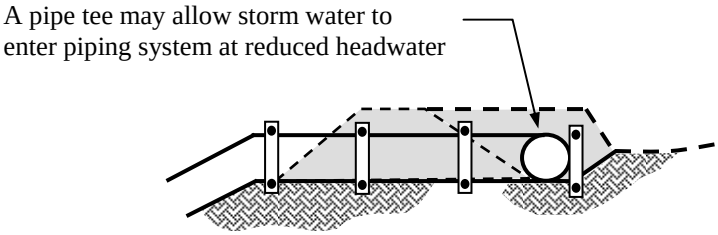

ALTERNATE ENTRANCE

Notes:

1. Plastic corrugated pipe, or other types of flexible piping, is highly recommended for downdrains and will essentially eliminate connections.
2. Place sandbags or other heavy objects adjacent to downdrain to help prevent lateral movement.
3. Ensure that all connections are watertight and that the diversion berm and channel are well-compacted at the top of slope. Mechanical compaction may be necessary to eliminate potential seepage or blowouts.

Figure ES-21-2
Typical Downdrain Details

ACTIVITY: Channel Linings	ES – 22

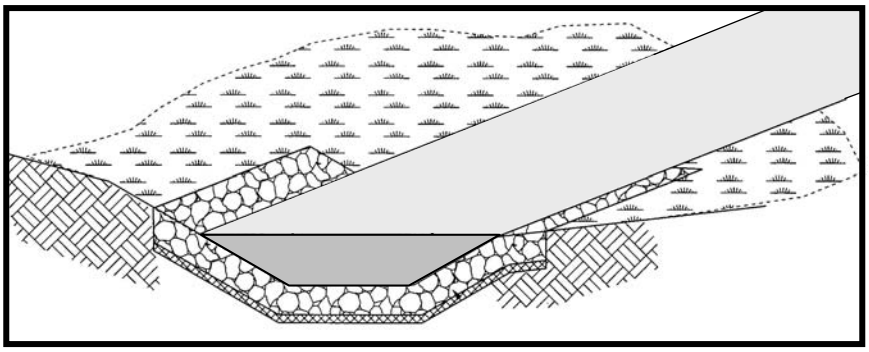

Targeted Constituents

● Significant Benefit ◗ Partial Benefit ○ Low or Unknown Benefit

● Sediment	○ Heavy Metals	○ Floatable Materials	○ Oxygen Demanding Substances	
◗ Nutrients	○ Toxic Materials	○ Oil & Grease	○ Bacteria & Viruses	○ Construction Wastes

Description

The selection of a channel lining will greatly influence how a drainage channel performs, the amount of erosion and scour, the frequency and cost of maintenance, its appearance and aesthetics, and even its safety. In addition, the amount of sediment and nutrients can be influenced greatly by the type of channel lining selected. This BMP will examine different factors and some basic design parameters for channels and channel linings.

Suitable Applications

- Any areas that regularly receive and convey concentrated storm water runoff, such as streams, drainage channels, ditches, or swales.
- Areas that occasionally convey storm water runoff, such as overland relief swales or emergency spillways.

Approach

Every drainage channel, ditch, or swale must have some type of channel lining. Unless otherwise specified, the existing channel lining must be native soil or rock. The least expensive and most beneficial lining is usually a grass channel if design parameters do not indicate excessive velocities, regular submergence, inadequate flow capacity, or potential maintenance problems. Grass channels are easy to maintain, flexible, self-healing, and attractive in appearance. They function as wildlife habitats, remove pollutants (see ST-05, Filter Strips and Swales), and decrease the amount of runoff by allowing storm water infiltration and evapotranspiration.

Grass channels are an example of a flexible lining (may also be called a “soft” or “green” lining) that includes vegetation as the principal means of preventing erosion. A variety of temporary and permanent geosynthetic products can help to establish a soft lining; common examples are erosion control matting, excelsior blankets, geogrids filled with soil, or turf reinforcement mats. Soft linings are aesthetically pleasing, flexible, and easy to install and maintain. The major drawbacks to soft linings are the potential for damage by heavy traffic, excessive heat or cold, excessive sunlight or shade, drought, severe storms, or pollution.

Due to the highly erodible loess soils in the Memphis area, concrete-lined channels are most commonly encountered. Due to state regulatory requirements, permits for concrete-lined channels are difficult to obtain. Concrete and asphalt channel linings are examples of rigid or "hard" linings. These channel linings are used when design velocities exceed permissible values for soft linings, or to improve flow capacity by reducing roughness and flow losses. Hard linings must be installed in a controlled manner with proper materials, compaction, bedding, and anchoring in order to prevent scour, undercutting, or settlement.

By law, anyone who works within or along a stream must obtain an Aquatic Resource Alteration Permit (ARAP) from the Tennessee Department of Environment and Conservation (TDEC) Division of Water Pollution Control. The ARAP is required for activities such as dredging, widening a channel, straightening a channel, building a dock or boat ramp, altering a wetland, utility line crossings, or stream bank stabilization. Visit the TDEC permitting Web site for more information.

http://www.state.tn.us/environment/permits/

Related BMPS that impact the selection of channel linings include:

ES-11 Erosion Control Blankets and Mats
ES-12 Geotextiles
ES-20 Bank Stabilization and Soil Bioengineering
ES-21 Diversions and Downdrains
ES-23 Riprap
ES-25 Outlet Protection

Basic Flow Computation

This section contains a description of basic flow computations for use in designing an open channel, ditch, or swale. Drainage channels and ditches should generally be designed by a professional engineer to ensure that adequate drainage capacity and allowable flow velocities are provided. Open-channel computations are usually in the form of Manning's equation:

$V = (1.49 / n)\ R_H^{2/3}\ S^{1/2}$, where

- V = average velocity in channel (feet per second)
- n = Manning's roughness coefficient (dimensionless)
- R_H = hydraulic radius of channel = A / W_P (expressed in feet)
- S = energy grade line = channel slope for uniform flow (dimensionless)
- A = cross-sectional flow area (square feet)
- W_P = wetted perimeter of flow (feet)

The total flow through the channel (Q, expressed in cubic feet per second) is equal to the velocity times the cross-sectional flow area: $Q = V\ A$

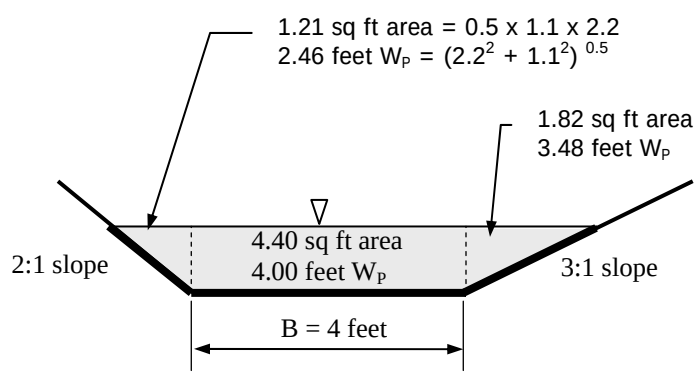

Given:

D = 1.10 feet
n = 0.025
S = 0.01 ft / ft
channel geometry

Computed:

A = 7.43 sq ft
W_P = 9.94 feet
R_H = 0.747 feet
V = 4.91 fps
Q = 36.5 cfs

Figure ES-22-1
Basic Flow Computation — Manning's Equation

Manning's equation is for open-channel flow and assumes a constant uniform flow rate at a specified slope. There are many factors that can affect this assumption, such as varying channel widths and slopes, downstream flow constrictions, backwater from dams or other berms, culvert entrance and exit losses, headwater at culverts or bridges, channel bends, varying lining materials, etc. Any of these factors will generally require that a professional engineer with knowledge and experience should be responsible for design and analysis. In addition, channels with unusual shapes, composite materials, or uneven sections will generally require that a professional engineer with knowledge and experience be responsible for the design and analysis. The major difficulty in estimating velocity and flow is usually the selection of

Manning's roughness coefficient "n." Typical values are listed in Table ES-22-1 and Table ES-22-2. See Figure ES-22-2 for n values of grass channels, based upon type and height of vegetation, and product of velocity (V) and hydraulic radius (R_H).

Subcritical and Supercritical Flow

It is useful to know whether a flow is subcritical (also called tranquil flow, backwater flow, or downstream control) or supercritical (also called rapid flow or upstream control). This is determined by computing the Froude (Fr) number; a value of Fr less than 1 is subcritical and a value greater than 1 is supercritical. Subcritical flow is greatly preferred because it has a lower velocity than supercritical flow. A value of Fr between 0.8 and 1.2 indicates that the channel is close to critical flow, and that small changes in channel cross section, flows, slopes, etc., may cause the water surface to change radically or even create a hydraulic jump or standing wave. Open channels should not be designed at or near critical flow conditions.

Fr	=	$((Q^2 * T) / (g * A^3))^{1/2}$, where
Fr	=	Froude number (dimensionless)
Q	=	discharge or flow (cubic feet per second)
T	=	top width of water surface (feet)
g	=	gravitational constant = 32.2 feet/ second^2
A	=	cross-sectional flow area (square feet)

(for Figure ES-22-1) $Fr = ((36.5^2 * 9.5) / (32.2 * 7.43^3))^{0.5} = 0.98$

The example channel in Figure ES-22-1 is approximately at critical flow and should be changed. Since subcritical flow is the preferred flow regime, this can be accomplished by widening the channel, flattening the side slopes, increasing the Manning's roughness coefficient n, or decreasing the channel slope.

Critical depth (D_C) indicates the flow depth for which the specific energy (E) is at a minimum value for a given discharge. Specific energy is computed by the equation:

$$E = D + V^2 / (2g)$$

For the example in Figure ES-22-1, the specific energy is 1.474 feet.

Table ES-22-1
Manning's Roughness Coefficient — Channels

Closed Conduits	**n**
Brick	0.016
Cast-iron pipe	0.013
Cemented rubble	0.021
Concrete pipe	0.013
Corrugated metal pipe, plain, regular corrugations	0.024
Corrugated metal pipe, asphalt-paved invert, flowing full	0.020
Corrugated metal pipe, asphalt-paved, 50% flow depth	0.015
Corrugate metal pipe, large corrugations (1" or 2" deep)	0.030
Plastic pipe, smooth/corrugated (consult manufacturer)	------
Polyvinyl chloride pipe	0.011
Steel pipe	0.010
Vitrified clay	0.013
Open Channels	**n**
Asphalt pavement	0.016
Bare earth, straight and uniform, no vegetation	0.020
Bare earth, straight and uniform, with some short grass	0.025
Bare earth, winding and sluggish	0.025
Bare earth, winding and sluggish, with some short grass	0.030
Brick	0.015
Cemented rubble	0.020
Concrete channel, unfinished	0.015
Concrete channel, troweled	0.013
Concrete channel, troweled with exposed gravel finish	0.017
Concrete channel with mortared or riprap sides	0.015 — 0.030
Concrete gutter, finished and troweled	0.013
Erosion control matting (excelsior mat or straw netting)	0.025 — 0.035
Erosion control matting (jute net)	0.022
Grass	***Figure ES-22-1***
Gravel or aggregate, compacted	0.030 — 0.050
Gravel bottom, with weeds on banks	0.035
Riprap, dumped (n chosen from D_{50} size)	***See ES-23 for n***
Riprap, grouted and placed as a smooth uniform	0.030 — 0.040
Rocky channel, smooth and uniform	0.025 — 0.035
Rocky channel, irregular and winding	0.040 — 0.050
Weeds and brush, uncut, only on banks	0.040 — 0.080
Weeds and brush, uncut, across entire channel	0.080 — 0.120

Grass channels are also frequently grouped into categories based upon the "retardance" that reflects the height and type of vegetation, flow characteristics of channel, etc. The retardance classification taken from Table ES-22-3 is then used in Figure ES-22-2 to select a Manning's roughness coeffficient based upon the product of velocity, V, and the hydraulic radius, R_H. Solving Manning's equation for a grass surface, due to the variable roughness coefficient, is an iterative process for which a spreadsheet may be helpful.

Table ES-22-2
Manning's Roughness Coefficient — Natural Channels

Natural Stream (less than 100 feet wide at flood stage)	n	
Clean, straight, no rifts or deep pools, grass banks	0.025 — 0.035	#
Clean, straight, grass with some stones, and weeds	0.030 — 0.040	#
Clean, winding, pools and shoals	0.033 — 0.045	#
Clean, winding, pools and shoals, some stones, and weeds	0.035 — 0.050	#

— Values may be increased by the largest of the 4 possible adjustments
1. adjust upward by 0.005 for lower stages or ineffective flow areas
2. adjust upward by 0.005 for larger stone and weeds
3. adjust upward by 0.010 to 0.020 for partially submerged trees branches
4. adjust upward by 0.030 to 0.050 for entire submerged trees in channel

Sluggish reaches, deep pools, many weeds	0.050 — 0.080
Sluggish, many deep pools, full of weeds, heavy timber	0.075 — 0.150
Mountain stream, gravel and cobbles, with steep banks	0.030 — 0.050
Mountain stream, cobbles and boulders, with steep banks	0.040 — 0.070

- In general, n values are lower for larger streams because the banks offer less resistance. Usually larger streams have been modeled by government agencies such as TVA, FEMA, or the City of Memphis and Shelby County so that some guidance is available on roughness coefficients used.
- Manning's n values can be substantially different during summer when vegetation may be overgrown and trees contain branches full of leaves. Adjust values upward if stream flow submerges trees and tree branches.

Floodplains (adjacent to natural streams)	n
Cleared land with tree stumps	0.040 — 0.050
Pasture, no brush, short grass	0.030 — 0.035
Pasture, no brush, high grass	0.035 — 0.050
Farmland, no crops	0.030 — 0.040
Farmland, mature crops	0.040 — 0.050
Heavy weeds, scattered brush	0.050 — 0.070
Light brush and trees	0.050 — 0.080
Medium to dense brush	0.070 — 0.110
Dense brush, thick trees, undergrowth, fallen logs	0.100 — 0.160

Natural streams have constantly varying cross sections and slopes, so that the Manning's equation should be used carefully with the understanding that other factors may affect flow depth. Therefore, the use of Manning's equation for natural streams should only be for rough estimating purposes.

Water surface profile programs, such as HEC-2 and HEC-RAS (developed by the U.S. Army Corps of Engineers Hydraulic Engineering Center) can handle multiple roughness coefficients, complex geometry, bridges, culverts, flow obstructions, and varied flow values into consideration.

Water surface profiles must be prepared by a professional engineer using the best available data.

Table ES-22-3
Retardance Classifications for Grass Channels

Class	Type of Vegetation	Condition
A	Yellow bluestem ischaemum	Excellent stand, tall, 36” average
	Weeping lovegrass	Excellent stand, tall, 30” average
B	Alfalfa	Good stand, uncut, 11”
	Bermudagrass	Good stand, tall, 12”
	Blue gamma	Good stand, uncut, 13”
	Kudzu	Very dense growth, uncut
	Reed canarygrass	Good stand, cut, 12” to 15”
	Sericea lespedeza	Good stand, not woody, tall, 19”
	Tall fescue	Good stand, uncut, 18”
	Weeping lovegrass	Good stand, uncut, 13”
	Grass mixture #1	Good stand, uncut
	Grass mixture #2	Good stand, uncut, 20”
C	Bahiagrass	Good stand, uncut, 6” to 8”
	Bermudagrass	Good stand, cut, 6” to 8”
	Centipedegrass	Very dense cover, 6” to 8”
	Crabgrass	Fair stand, uncut, 10” and longer
	Kentucky bluegrass	Good stand, headed, 8” to 10”
	Redtop	Good stand, uncut, 15” to 20”
	Tall fescue	Good stand, cut or uncut, 6” to 8”
	Grass mixture #3	Good stand, uncut, 6” to 8”
D	Bahiagrass	Good stand, cut, 3” to 4”
	Bermudagrass	Good stand, cut, 2.5”
	Buffalograss	Good stand, uncut, 3” to 6”
	Centipedegrass	Good stand, cut, 3” to 4”
	Kentucky bluegrass	Good stand, cut, 3” to 4”
	Red fescue	Good stand, uncut, 12”
	Sericea lespedeza	Good stand, cut, 2”
	Tall fescue	Good stand, cut, 3” to 4”
	Grass mixture #4	Good stand, uncut, 4” to 5”
E	Bermudagrass	Good stand, cut, 1.5”
	Any type of grass	Burned or trampled, any length

Native grass mixture #1 — prairie grasses, bluestem, blue gamma

Summer grass mixture #2 — tall fescue, red fescue, sericea lespedeza

Summer grass mixture #3 — timothygrass, smooth bromegrass, or orchardgrass

Spring/autumn grass mixture #4 — orchardgrass, redtop, annual lespedeza

Using the example in Figure ES-22-1, a roughness coefficient value of 0.025 corresponds to any of several channel linings in Table ES-22-1 such as:

- Bare earth, straight and uniform, short grass
- Erosion control matting (excelsior mat)
- Rocky channel, smooth and very uniform

Using the same geometry as shown in Figure ES-22-1 with a grass channel lining instead will yield the following two sets of answers for the same given flow of 36.5 cubic feet per second. In general, a conservative design will use unmowed grass to check conveyance and mowed grass to check for velocities. So the design depth would be 2.06 feet and the design velocity would be 3.56 feet per second.

UNMOWED

Retardance B:

Q = 36.5 cfs

n = 0.089

D = 2.06 feet
A = 18.85 sq ft
W_P = 15.12 feet
R_H = 1.247 feet
V = 1.94 fps

MOWED

Retardance D:

Q = 36.5 cfs

n = 0.039

D = 1.38 feet
A = 10.28 sq ft
W_P = 11.45 feet
R_H = 0.898 feet
V = 3.56 fps

Grass channels are often designed as a parabolic shape without any corners or slope breaks. The following formulas for cross-sectional flow area (A) and hydraulic radius (R_H) are based on the top width of flow (T) and maximum flow depth at the center of channel (D):

$$A = 2/3\ (T\ D)$$

$$R_H = (T^2\ D) / (1.5\ T^2 + 4\ D^2)$$

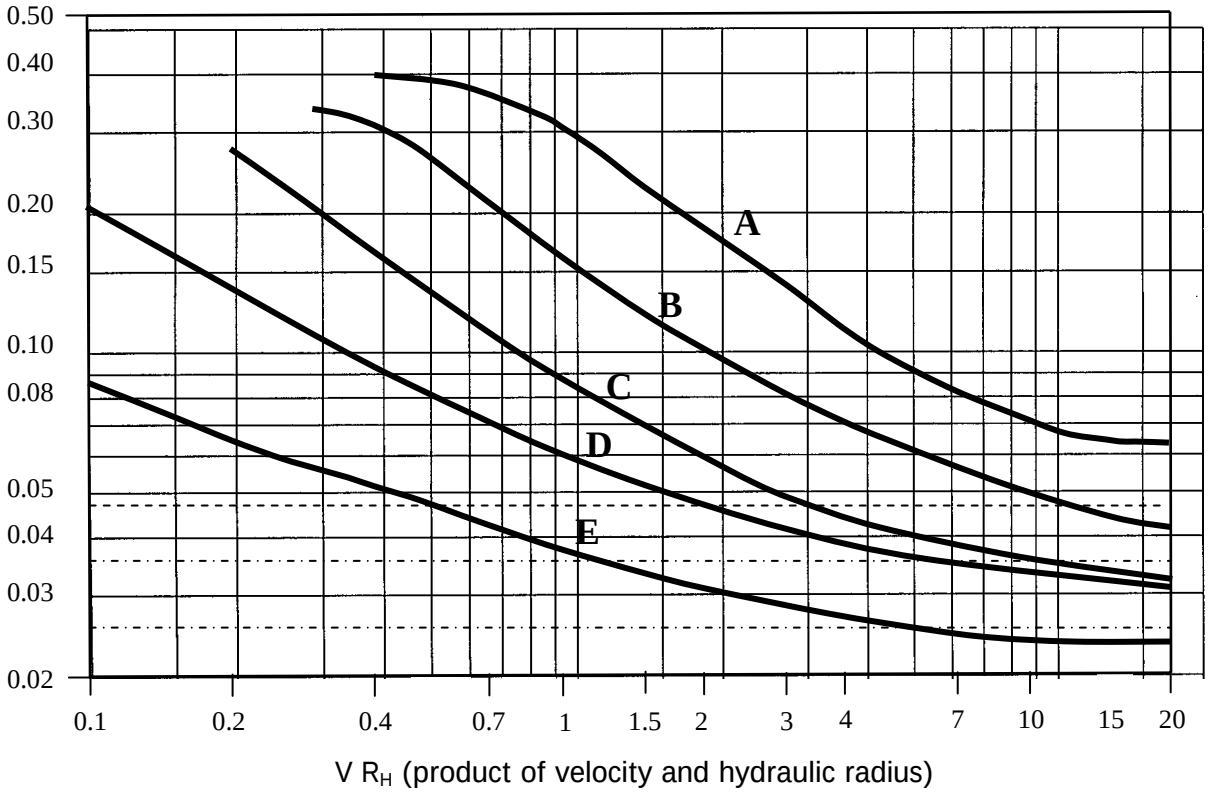

Figure ES-22-2
Manning's Roughness Coefficient — Grass Channels

Permissible Velocities

A channel lining may be judged adequate or permissible based on two possible criteria, either permissible shear stress or permissible velocity. Permissible shear stress is based on the force necessary to displace or move the soil, aggregate, or other type of channel lining. The formula for normal shear stress (T) at the bottom of a uniform channel is shown below. This value is adjusted for several factors such as side slope, bend angles, shape of channel, etc., before being compared to published values of permissible shear stress.

$$T = \gamma D S$$

T = shear stress (pounds per square foot)
γ = unit weight of water (62.4 pounds per cubic foot)
D = flow depth of water (feet)
S = channel slope (feet per foot)

The simpler design method is to specify a permissible velocity for each type of channel lining. Typical permissible velocities are listed in Table ES-22-4. In general, a temporary channel lining should be considered if the design flow velocity for bare soil is greater than 2 feet per second. For preliminary design, a soil may be considered erodible if it has a published K value of 0.35 or greater in the City of Memphis and Shelby County soils map.

Table ES-22-4
Permissible Velocities

Channel Lining Material	Permissible Velocity (fps)		
Silt or very fine-grained materials	1.5		
Fine sand, sandy loam, silty loam	2.0		
Undisturbed alluvial sediments	3.5		
Stiff clay	3.5		
Coarse sand or fine gravel (no silt)	4.0		
Coarse gravel	5.0		
Cobbles, hard pan, shale	5.5		
	0 to 5%	*5 to*	*Over 10%*
Erodible Soil (silt, loam, sand)			
Bermudagrass	5.5	4.5	3.5
Bahiagrass, Blue Gamma, Kentucky bluegrass Reed canarygrass, Tall fescue	4.5	3.5	2.5
Mixture (fescue, lespedeza., legumes)	3.5	3.0	----
Alfalfa, Crabgrass, Kudzu, Sericea lespedeza Weeping lovegrass, Yellow bluestem	3.0	2.5	----
Resistant Soil (gravel, clay, cohesive)			
Bermudagrass	6.5	5.5	4.5
Bahiagrass, Blue Gamma, Kentucky bluegrass Reed canarygrass, Tall fescue	5.5	4.5	3.5
Mixture (fescue, lespedeza., legumes)	4.5	3.5	----

Table ES-22-4 (Continued) Permissible Velocities			
Channel Lining Material	**Permissible Velocity (fps)**		
Alfalfa, Crabgrass, Kudzu, Sericea lespedeza Weeping lovegrass, Yellow bluestem	3.5	3.0	----

Maintenance

- Channel linings should be inspected at least weekly during the construction phases to ensure proper functioning and necessary control of erosion and sediment. Inspect channels monthly during the first year after construction to verify that drainage channels work properly as designed and constructed.

- After the first year, channel linings should be inspected at least quarterly on a permanent basis. Look for erosion, siltation, undercutting, or settlement throughout the length of channel. Verify that upstream and downstream portions of channel are not adversely affected.

Limitations

- Flexible channel linings need frequent maintenance and inspections to ensure adequate function and erosion control. Soft channel linings can be damaged or stressed due to many factors.

- Rigid permanent channel linings often result in prevention of habitat establishment. Hard linings may be damaged due to settlement, scour, or undercutting despite the best efforts and care taken during installation.

- Inadequate coverage or depth of channel linings will result in erosion, washout, and poor plant establishment. If the channel grade and liner are not appropriate for the amount of runoff, channel bottom erosion may result.

- Riprap must be sized correctly and installed according to correct procedures. If the channel slope is too steep or riprap is too small, displacement may occur. Displaced riprap may obstruct the channel or cause additional damage.

References

23, 20, 31, 32, 139, 141, 153, 162, 164, 167, 173, 174, 179 (see BMP Manual Chapter 10 for list)

ACTIVITY: Riprap	ES – 23

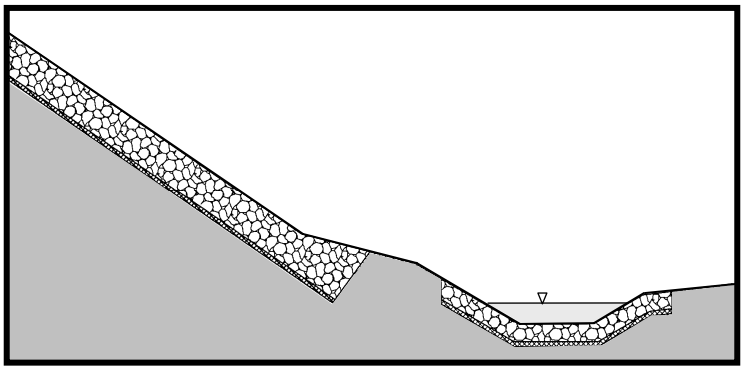

Targeted Constituents				
● Significant Benefit		◗ Partial Benefit	○ Low or Unknown Benefit	
● Sediment	○ Heavy Metals	○ Floatable Materials	○ Oxygen Demanding Substances	
○ Nutrients	○ Toxic Materials	○ Oil & Grease	○ Bacteria & Viruses	○ Construction Wastes

Description

Riprap is the controlled placement of large rock material that will resist movement and erosion. Riprap is used to protect culvert inlets and outlets, stream banks, drainage channels, slopes, or other areas subject to erosion by storm water erosion. This practice will significantly reduce erosion and sediment movement.

Suitable Applications

- Along a stream or within drainage channels, as a stable lining resistant to erosion.
- On shorefronts and riverfronts, or other areas subject to wave action.
- Around culvert outlets and inlets to prevent scour and undercutting.
- In channels where infiltration is desirable, but velocities are too excessive for vegetative or geotextile lining.
- On slopes and areas where conditions may not allow vegetation to grow.

Approach

Riprap may be used in many different locations and many different ways. It is very resistant to erosion and has relatively few drawbacks when installed correctly. Riprap does not prevent erosion or sedimentation from occurring, but it can help to create a stable channel lining and to reduce velocities. Other types of riprap material can also include cement bags (with sand/ aggregate added) or concrete blocks, as described in Tennessee Department of Transportation (TDOT) Standard Specifications for Road and Bridge Construction (reference 172).

Stone riprap can either be placed as graded machine riprap (layers that can be placed by machine and then compacted) or as rubble (large pieces of rock are placed by hand). Graded riprap is often used for channel linings because it is flexible and can be compacted to a dense structure without manual sorting or

placement. Rubble-stone riprap can be used for an attractive landscaped appearance but lacks flexibility to adapt to settlement, washing out of material, burrowing animals, etc.

Oftentimes there may be a "green" solution for slope stabilization problems or for drainage channels that would have typically required riprap. Erosion control matting, geotextiles, and flexible mattresses are just a few examples of how geosynthetics are providing alternatives for channels traditionally lined with riprap and concrete. Some alternatives to riprap for slopes include surface roughening, terracing, and mulching.

The selection of whether to use riprap may be dependent upon safety and maintenance considerations. Riprap could pose a hazard from snakes or burrowing animals for children who play in ditches or streams. Children may also be tempted to throw or drop rocks into water to see a big splash. Large rocks could settle or dislodge, endangering anyone in the immediate vicinity. Weeds may be difficult to control.

As a rough guideline, riprap can be specified for a design flow velocity that is over 5 feet per second (approximate upper limit of most vegetative channel linings). The upper limit for design flow velocity of a riprap channel lining depends primarily on the size of riprap specified and methods used for securing riprap material in place. Graded machined riprap is usually less expensive to install than hand-placed riprap and tends to be more flexible in case of settlement or movement.

Two common misuses of riprap:

- It is often specified incorrectly as an erosion control method just because the project designer has not performed drainage calculations. The project designer incorrectly assumes that a certain amount of "hard" material in a drainage channel will create a stable, non-eroding channel lining that is maintenance-free.

- Riprap is often installed incorrectly as a channel lining. A contractor may form and grade a drainage channel, and then dump some rock into it as an afterthought. This makes the channel have a much smaller flow capacity than was originally designed. If riprap is dumped without proper placement and compaction, it will act somewhat as a rock check dam. This will allow sedimentation to occur even more and thus further reduce flow capacity.

Materials

Riprap shall generally consist of machined shot rock that is angular and clean. Do not use rounded stones or cobbles for riprap (although cobble stones may be used in grouted channels for architectural appearances). Riprap shall not contain sand, dust, organic material, excessive cracks, mineral lenses and intrusions, or other impurities. Riprap is usually solid durable limestone rock quarried locally, which is generally resistant to erosion and to normal stream

chemistry. Riprap material that is of questionable origin may be given a sodium sulfate soundness test to determine its durability. Riprap material shall have at least 2.5 specific gravity.

Table ES-23-1
Machined Riprap Specifications (TDOT Classification)

Class A-1	Class A-3	Class B	Class C
2" to 15" diameter (0.5 to 169 lbs) Dumped	2" to 6" diameter (0.5 to 11 lbs) Dumped	3" to 27" diameter (1.5 to 985 lbs) Dumped	5" to 36" diameter (6 to 2335 lbs) Dumped
20% by weight shall be at least 4" size (3 lbs) Typical thickness is 18" with surface tolerance of 3"	20% by weight shall be at least 4" size (3 lbs) Typical thickness is 12" with surface tolerance of 2"	20% by weight shall be at least 6" size (11 lbs) Typical thickness is 30" with a surface tolerance of 4"	20% by weight shall be at least 9" size (36 lbs) Typical thickness is 42" with a surface tolerance of 6"

The different classes of machined riprap are shown in Table ES-23-1 and are taken directly from the TDOT specifications. Gradations are commonly specified in terms of a specified percentage by weight being smaller than a diameter. For example, TDOT calls for Class B riprap to have a D_{20} of at least 6 inches. D_0 would be the smallest allowable size and D_{100} would be the largest allowable size for any specified gradation.

Alternate riprap sizes are listed in City of Memphis and Shelby County Technical Specification #25 (available on Civil Engineering Division webpage) as shown in Table ES-23-2. These classes are relatively narrow gradations for use as riprap placed by hand.

Table ES-23-2
Hand-Placed Riprap Specifications
(City of Memphis and Shelby County Classification)

Class I	Class II	Class III	Class IV
1.5" to 5" dia Hand-placed 75% by weight shall be at least 4" size 12" thickness	6" to 10" dia Hand-placed 75% by weight shall be at least 8" size 12" thickness	9" to 12" dia Hand-placed 75% by weight shall be at least 11" size 18" thickness	12" to 18" dia Hand-placed 75% by weight shall be at least 15" size 24" thickness

Other types of riprap materials are shown in Table ES-23-3. Rubble-stone riprap can be very attractive as well as functional, but requires a great deal of hand labor and time. Manufactured concrete products such as interlocking blocks, articulated blocks, and revetment mattresses can resist very high flow velocities and are usually designed to be flexible for handling settlement and subgrade irregularities. Sacked riprap (essentially a concrete

lining) is also labor-intensive and expensive to install. Concrete linings are generally discouraged because they do not allow for wildlife habitats and may contribute to downstream drainage problems such as high velocities.

Table ES-23-3
Non-Machined Riprap Specifications (TDOT Classification)

Rubble-Stone (plain)	Rubble-Stone (grouted)	Concrete Blocks	Sacked Riprap (sand-cement)
Min 2" diameter (min 0.5 lbs) Placed by hand	Min 2" diameter (min 0.5 lbs) Placed by hand	Rectangular shapes that can be placed in the specified dimensions by hand	Approx 1 cubic ft (approx 100 lbs) Placed by hand
80% by weight shall be at least 10" in any dimension (prefer rectangular)	80% by weight shall be at least 10" in any dimension (prefer rectangular)	Class A concrete with 3,000 pounds per square inch 28-day strength	Sacks should be cotton or jute cloth that retains sand and dry cement mix
Remainder is 2" to 4" size for chinking	Remainder is 2" to 4" size for chinking	Various thickness from 4" upwards	Mix 1 bag cement (94 lbs) with 5 cubic feet of sand
Typical thickness is 12" with surface tolerance of 2"	Typical thickness is 12" with surface tolerance of 2"	Design and install per manufacturer's recommendations	Typical thickness is 10" with a surface tolerance of 2"

For smaller aggregates (less than 2 inches across), gradation is normally determined by mechanically shaking several pounds of material through a set of progressively smaller sieves. Then it can be stated that a certain percentage (by weight) is finer than a particular sieve with a defined opening size, which is then equated with an average diameter. However, riprap material cannot be mechanically shaken through sieves and thus it is more difficult to quantify the average size.

A geotextile filter fabric is usually placed beneath riprap to maintain separation from underlying soils. Also, geotextile filter fabric is necessary within stream channels to avoid loss of fine-grained soils. In particular, use geotextile filter fabric at the inlet and outlet of culverts, where turbulence is normally expected. Typical properties are listed in ES-12, Geotextiles. The equivalent opening size (EOS) of a geotextile filter fabric is typically between U.S. standard sieve size No. 40 and No. 70 for use with most soils. The minimum recommended size for a geotextile filter fabric is No. 100, intended for use with fine-grained silts and clays. The geotextile filter fabric should be anchored securely using anchor trenches, stakes, staples, or sewing or a combination of methods.

A layer of aggregate or sand can also be placed beneath riprap to maintain separation from underlying soils, either in addition to filter fabric or in place of filter fabric. The layer of aggregate or sand acts as a smooth bed to allow easier placement of riprap, and it can be used as a granular filter. The granular filter permits water to drain out or seep through it without allowing the adjacent soil or aggregate to bleed through. In general, a geotextile filter fabric will perform this function more reliably and with much smaller installation costs.

A granular filter should have the following properties with relation to the base soil underneath. The first and second properties are an application of the well-known filter criteria used by dam builders and other civil engineers for over a century. The third and fourth properties help ensure that the gradation curve of the granular filter is approximately the same shape as the gradation curve of the soil base.

1. D_{15} of filter must not be more than five times D_{85} of ase.
2. D_{15} of filter must not be less than five times D_{15} of base.
3. D_{15} of filter must not be more than 40 times D_{15} of ase.
4. D_{50} of filter must not be more than 40 times D_{50} f base.

The relationship of the riprap to an underlying granular filter layer should follow the same filter criteria as between the granular filter and the base soil. In other words, the term “filter” refers to the larger-grained material and the term “base” refers to the smaller-grained material. Due to the many problems associated with carefully placing 6” layers of graded aggregate or sand, the use of geotextile filter cloth is greatly preferred.

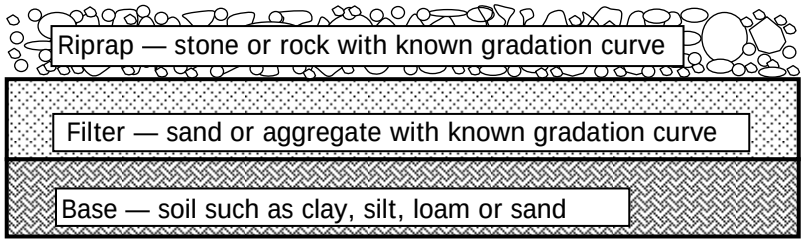

Design

There are many methods available for choosing riprap size, particularly for riprap channel linings. There are methods that make use of only one equation or nomograph, which can only account for three or four factors using assumptions and various rule-of-thumb guidelines. There are many methods that try to account for forces and momentum more exactly, with several equations and nomographs being used for factors such as rock-specific gravity, stream tractive force, drag force, etc.

Riprap design shall generally be performed by a professional engineer using drainage computations, field conditions, quality of materials, and construction placement. If possible, it is recommended that a few design methods should be used to verify reasonable results.

River Shorelines: Riprap for use on river or lake shorelines should be designed to conform with standards by the U.S. Army Corp of Engineers. Large riprap with approximate average sizes of 24 to 36 inches should be used, depending on locations of nearby bridges or other factors affecting velocity.

Slopes: Riprap applications for slope stabilization, where wave action or flowing water is not a concern, should be sized for stability. The natural angle of repose is defined as the angle at which material can be placed without sliding downhill due to gravity. Angular riprap or crushed rock typically has in the neighborhood of 40°, so that a slope of 1.5 to 1 for most slopes is reasonable when not subject to flowing water. Rounded stones such as river gravel have a lower angle of repose. See Figure ES-23-1 for angle of repose based on average stone size, D_{50} (using a chart from reference 153).

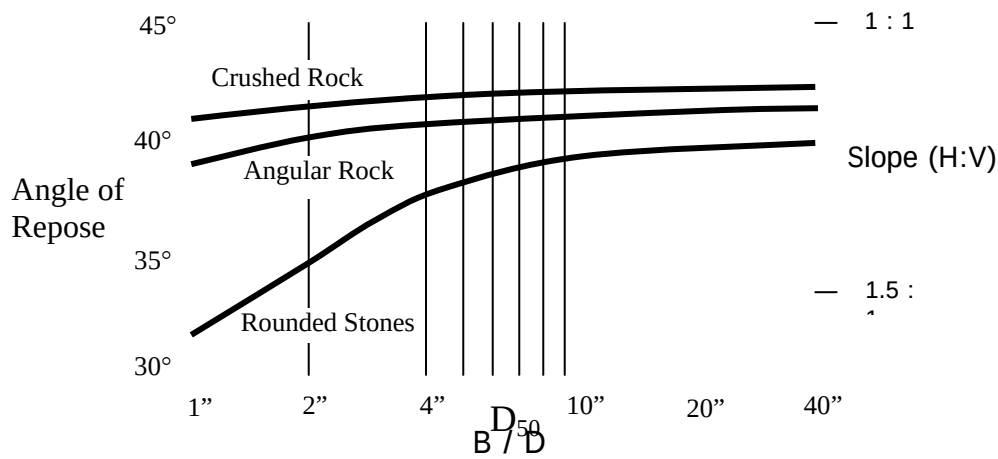

Figure ES-23-1
Angle of Repose for Riprap Based on Average

The angle of repose does not take into account any external forces (such as vehicles, people, storms, groundwater, earthquakes, other ground vibrations). Also, sliding will often occur at the interface between two layers, particularly on a geotextile filter fabric that is not sufficiently anchored. Slope stability analyses

should be performed by a professional engineer for all sloped areas that are critical or potentially hazardous.

Channels (HEC-15 design method):

The following design method for sizing riprap is taken from Hydraulic Engineering Circular 15, Design of Stable Channels With Flexible Linings, by the Federal Highway Administration (1975). The mean riprap size is computed for tangent sections and curved sections of trapezoidal channels. Drainage computations are used to determine channel shape, channel slope, surface width, and design flow depth by using the Manning's n roughness coefficient equal to:

$n = 0.0395 \times (D_{50})^{1/6}$

1. Compute the channel bottom D_{50} riprap size based on the following equation where D_{50} and the maximum design flow depth have the same units (inches or feet) and channel slope is expressed in feet per foot:

Bottom D_{50} = 12.5 * Depth * Channel Slope

2. If the channel side slopes are steeper than 3:1, then the side slope D_{50} riprap size will be adjusted using the following equation where K_1 is obtained from Figure ES-23-2 and K_2 is obtained from an equation:

Bottom $D_{50} \times K_1 / K_2$ = side slope D_{50} $K_2 = (1 - \sin^2(\varphi)/\sin^2(\theta))^{0.5}$

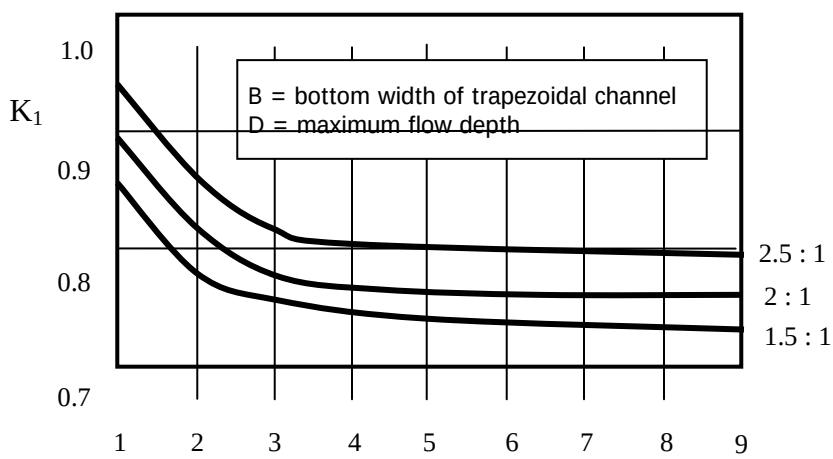

Figure ES-23-2
Distribution of Boundary Shear for Trapezoidal

The side slope D_{50} is the riprap size necessary for the sides slopes of tangent sections where side slope is steeper than 3:1 (18.5°), φ is the angle of the side slope in degrees, and θ is the angle of repose in degrees.

3. For curved sections of channel, compute the ratio Δ_C, which is the internal angle that differentiates between a short bend and a long bend. The value R_O is the radius of the channel centerline bend, and the value R_D is the average radius of the channel outside bend as computed by the following equation using T (top width of the channel) and B (bottom width of trapezoidal channel):

   $R_D = R_O + 0.25\ (T + B)$

   $\Delta_C = \cos^{-1} (R_O / R_D)$

4. Long bend (bend angle Δ is more than Δ_C): The tangent D_{50} riprap size (from Step 1 if side slopes are not steeper than 3:1, or Step 2 if side slopes are steeper than 3:1) will be adjusted using the coefficient K_3 which is obtained from an equation with V being the average velocity (using Manning's flow equation):

   Curved $D_{50} = K_3$ x tangent D_{50}

   $K_3 = 4 \times V^2 / R_D$

5. Short bend (bend angle Δ is less than Δ_C): The tangent D_{50} riprap size (from Step 1 if side slopes are not steeper than 3:1, or Step 2 if side slopes are steeper than 3:1) will be adjusted using the coefficient K_4 which is obtained from an equation using K_3 as computed above:

   Curved $D_{50} = K_4$ x tangent D_{50}

   $K_4 = 1 + (K_3 - 1)\ (\Delta / \Delta_C)$

The selection of a mean riprap size D_{50} will basically specify a gradation curve. The maximum riprap size should be 1.5 times the D_{50} riprap size. The riprap layer thickness should be approximately 1.7 to 2.0 times the D_{50} riprap size, in accordance with the TDOT riprap classifications in Table ES-23-1.

The minimum freeboard for a riprap channel shall generally be at least 6 inches, depending upon the type of computations and potential for damage. Always provide additional freeboard at culvert inlets and outlets, areas of potential turbulence, changes in slope or direction, etc. Super elevation of the flow surface may occur on the outside bank of a channel bend. The amount of super elevation, Δ_Y, can be estimated using the following equation where g is equal to 32.2 feet per second per second and the other terms have already been defined:

$\Delta_Y = (V^2\ T) / (g\ R_O)$

Installation

Installation of riprap should be accomplished within a short time frame (1 or 2 days) to minimize potential for damage from storm water runoff.

General Subgrade Preparation

- Clear and grade the area of trees, brush, vegetation, and unsuitable soils. Provide equipment access as necessary for earthwork and handling of large rocks.

- Prepare the subgrade to the specified depth necessary for installation of riprap. Compact subgrade firmly to prevent slumping or undercutting. Excavate anchor trenches as necessary for installation of geotextile filter fabric.

- Install geotextile filter fabric to maintain separation of rock material with the underlying soil. Geotextile filter fabric should be placed so that it is not stretched tight and conforms closely to the subgrade. Secure filter fabric by using anchor trenches, stakes, staples, sewing, or any other means necessary according to manufacturer's recommendations.

- Place a layer of aggregate or sand (if specified by design for use as a bedding layer or as a granular filter) so that the layer is smoothly graded and well-compacted. A typical layer of aggregate or sand is 4 inches thick when used only as a bedding material. A granular filter of aggregate or sand is usually 6 inches thick.

Rubble-Stone Riprap

Rubble-stone riprap is usually placed as one layer (12" deep), two layers (6" deep), or an interlocking mixture of one and two layers. Rubble-stone riprap should be hand placed so that the stones are close together, are staggered at all joints as far as possible, and are placed so as to reduce the voids to a minimum. The larger rocks should be thoroughly chinked or anchored in place by using 1" to 3" stones or aggregate placed over the surface and compacted in any manner practical.

When rubble-stone riprap is constructed in layers, the layers should be thoroughly tied together with large stones protruding from one layer into the other. The average depth is usually determined by frequent measurements throughout installation. Any change in thickness should be accomplished gradually.

Installation of grouted rubble-stone riprap includes hand placement of large rocks, chinking with smaller rocks and aggregate, filling with grout, surface finishing, and curing. When grouting is used, care should be taken to prevent earth or sand from filling the spaces between the stones before the grout is poured. Grout should be composed of one part Portland cement and four parts of sand measured by volume, and then mixed thoroughly with sufficient water to a consistency so that the grout can flow into and completely fill the voids.

Immediately before pouring grout, the stones should be wetted by sprinkling. Starting at the lower portion of the riprap channel, carefully pour grout into the voids between the stone and at a slow rate to prevent oozing to the surface. Do not pour grout over the entire surface of the riprap, but insert grout mixture by using vessels, chutes, tubes, or hoses of adequate size and shape. Carefully finish the grouted riprap surface using small hand tools. Remove excess grout without disturbing riprap structure. Allow grout to harden and set before any storm water is received. Keep grout moist with water that is free from salt or alkali for a period of not less than 72 hours.

Sacked Riprap (Sand-Cement)

Sand for sacked riprap may be either manufactured or natural clean sand, free from impurities and conforming to requirements for either cement sand or mortar sand. The basic requirements for sand are a maximum size (or D_{100}) to be approximately 3/8 inches and a minimum size (or D_0) to be equal to the No. 200 sieve or larger (i.e., no dust or clay). Portland cement should be manufactured dry-powdered hydraulic cement without impurities. Do not use hydraulic cement that is caked or otherwise moist. Sacks should be of either cotton or jute standard grade cloth that is able to hold the sand-cement mixture without leakage during handling and tamping.

Sand and hydraulic cement should be mixed dry, with a mechanical mixer, in the proportion of one bag (94 pounds) of cement to 5 cubic feet of dry sand, until the mixture is uniform in color. The sand-cement mix should be poured into sacks of approximately 1 cubic foot capacity until the sacks are approximately ¾ full. The sacks should then be securely fastened with hog rings, by sewing, or by other suitable methods that prohibit leakage of the mixture from the bags.

The sacks of sand-cement should be bedded by hand on the prepared grade with all the fastened ends on the grade and in a staggered pattern, with a minimum thickness of 10 inches. The sacks should be rammed and packed against each other in such a manner as to form close contact and secure a uniform surface. Immediately after placement, sand-cement sacks should be thoroughly soaked by sprinkling with water (but not high-pressure water flows). Sacks that are ripped or broken in placement should be removed and replaced before being soaked with water.

Machined Riprap

Machined riprap material is generally dumped and placed by the use of appropriate power equipment. Placement should avoid segregating material by minimizing drop heights and by dumping material in large quantities. Riprap is then graded and compacted (using hand or mechanical tamping) to produce a

surface uniform in appearance. Handwork may be required to correct irregularities. Place riprap carefully to avoid puncturing or displacing geotextile fabric.

Typical layer thickness and allowable surface tolerances are shown in Table ES-23-1. Class A-2 machined riprap is the same as Class A-1 riprap except that the depth may be decreased to 12 or 15 inches when placed by hand in accordance with rubble-stone installation procedure. Other classes of hand-placed riprap are listed in Table ES-23-2.

Inspection

The final step in riprap installation is to verify that proper construction methods are used and that the specified gradation was installed. Visually inspect machined riprap to ensure that at least 20 percent of surface area consists of the D_{20} stone sizes specified within the materials section. Check that 50 percent of the surface area consists of stones no smaller than one-half of the maximum size specified.

Table ES-23-4 provides a rough guide to estimating the weight and equivalent diameter size of riprap material. A unit weight of 165 pounds per cubic foot is the same as a specific gravity of 2.65 with respect to water. Rectangular dimensions in a ratio of 3:2:1 are also listed as a frame of reference.

Table ES-23-4
Weight and Size Equivalents of Riprap
(assuming a unit weight of 165 pounds per cubic foot)

Weight	Equivalent diameter (spherical)	Rectangular dimensions (assuming 3:2:1 ratio)
1 pound	2.7 inches	3.6” x 2.4” x 1.2”
2 pounds	3.4 inches	4.6” x 3.0” x 1.5”
5 pounds	4.6 inches	6.2” x 4.1” x 2.1”
10 pounds	5.8 inches	7.8” x 5.2” x 2.6”
20 pounds	7.4 inches	9.8” x 6.5” x 3.3”
30 pounds	8.4 inches	11.2” x 7.5” x 3.7”
40 pounds	9.3 inches	12.4” x 8.2” x 4.1”
50 pounds	10.0 inches	13.3” x 8.9” x 4.4”
75 pounds	11.4 inches	15.2” x 10.1” x 5.1”
100 pounds	12.6 inches	16.8” x 11.2” x 5.6”
150 pounds	14.4 inches	19.2” x 12.8” x 6.4”
200 pounds	15.9 inches	21.2” x 14.1” x 7.1”
250 pounds	17.1 inches	22.8” x 15.2” x 7.6”
300 pounds	18.2 inches	24.2” x 16.1” x 8.1”
500 pounds	21.5 inches	28.7” x 19.1” x 9.6”

Limitations

- Displacement may occur if the slope is too steep or if riprap is too small.
- If no geotextile filter cloth is used, then scour may quickly occur and damage channel. Scour may also occur for improperly designed or installed geotextiles.
- Riprap that is too small may experience movement within a drainage channel. This may create downstream blockages and excess sedimentation, in addition to allowing the channel to erode.

References **33, 34, 35, 141, 159, 161, 162, 167, 172, 179** (see BMP Manual Chapter 10 for list)

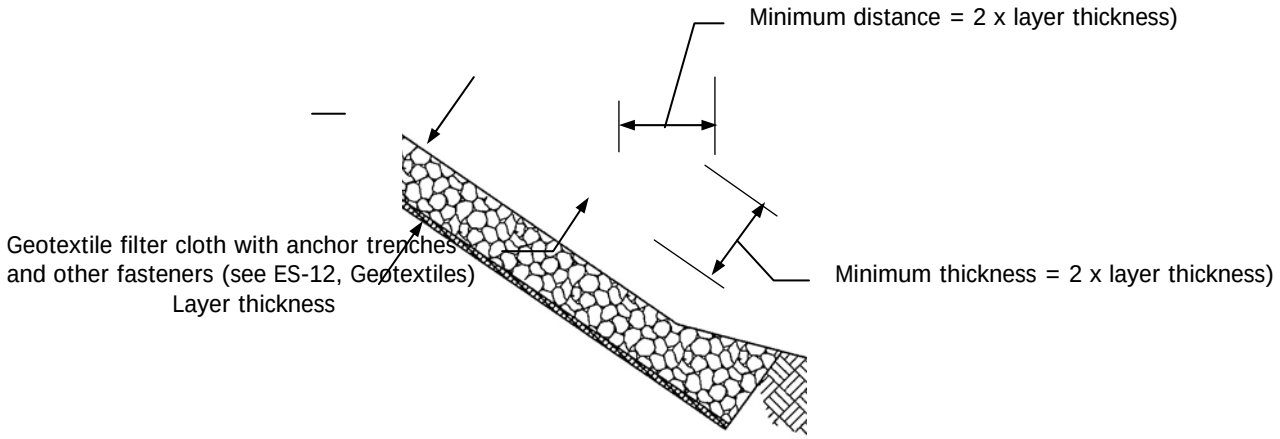

Figure ES-23-3
Base of Riprap Slope Protection

ACTIVITY: Temporary Inlet Protection	ES – 24

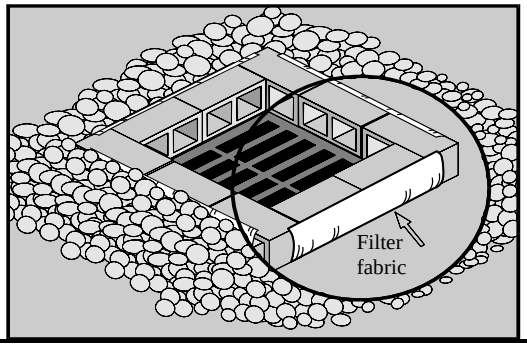

Targeted Constituents

● Significant Benefit ◗ Partial Benefit ○ Low or Unknown Benefit

● Sediment	○ Heavy Metals	◗ Floatable Materials	○ Oxygen Demanding Substances	
○ Nutrients	○ Toxic Materials	○ Oil & Grease	○ Bacteria & Viruses	◗ Construction Wastes

Description

Temporary inlet protection during construction is helpful to settle sediment prior to the storm drainage system. Inlet protection can be installed at grate inlets, curb inlets, culverts, or other drainage features by creating a flooded, settling area that will allow mud to be cleaned up and properly disposed. This practice will significantly reduce sediment and will help control floatable waste materials and other construction wastes.

As described in ES-01 a stabilized construction exit is required to keep soil out of paved roads. Temporary inlet protection is typically used during construction when flooding of roadways can be tolerated. As always, construction site managers should focus on erosion prevention (stabilizing the site) and not reliance on soil removal.

Suitable Applications

- Every storm drain inlet, catch basin, curb inlet, culvert, or similar drainage structure that receives sediment-laden runoff must be protected by a combination of upstream erosion control and temporary inlet protection as needed. (Note: Paved streets with curb and gutter drainage systems are considered part of the storm drain system and discharges of sediment into the curb are an illegal discharge.)

- Where disturbed tributary areas have not yet been permanently stabilized, and where ponding water will not endanger highways, street traffic, houses or other buildings, parks, or other facilities. (Note: if water drains through the “inlet protection” quickly, so that the street/area is not flooded, then it is not removing sediment either.

- Small drainage areas, typically less than 0.5 acres, that have impervious surfaces that do not permit the construction of a sediment trap or sediment basin.

Approach

Design, build, and maintain inlet protection to contain the design storm, but allow a bypass at the required design storm. Temporary inlet protection generally consists of a means of damming/filtering (geotextile fabric, aggregate, straw bale) that is securely anchored and supported against the weight of ponded water by some type of support (wood posts, concrete blocks, wire mesh, the inlet structure itself). This can be accomplished in many different ways; the following details are included in this BMP and may be modified to meet site requirements.

Route offsite water around the area of construction if possible. If water flows off a paved street through the area construction, arrangements must be made during the Erosion Control Plan design phase to handle this water without causing a nuisance or backing the water into the street (such as through the installation of a detention pond).

Figure ES-24-1	Block and Gravel	(with filter fabric and gravel)
Figure ES-24-2	Sandbag Barrier	(also see ES-16, Sandbag Barrier)
Figure ES-24-3	Wire Miesh and Gravel	(also see ES-17 for rock filer berm)
Figure ES-24-4	Excavated Impoundment	(with wire mesh and gravel)
Figure ES-24-5	Geotextile Filter Bag	(premanufactured geotextile product)

Temporary inlet protection is appropriate for small areas of less than 1 acre, generally flat with less than 5% slope. Temporary inlet protection for paved or impervious areas should generally have smaller areas of less than half an acre. Inlet protection structures that pond water onto streets, parking lots, or driveways should be designed to have some method for allowing excess water from large storms to bypass or overflow.

The media (which is generally clean aggregate or silt fence fabric) should be inspected regularly to see if sediments and silt are clogging the material. Replace clogged aggregate with new clean aggregate regularly. Silt fence requires frequent maintenance and is not recommended. Straw bales float and are generally ineffective because they decompose rapidly and develop holes and cracks from routine storm water flows, requiring them to be maintained much more frequently than other types of temporary inlet protection.

Storm water runoff may bypass protected inlets on slopes. A berm or other type of wall can be used to capture some of the flow. Inlets that are downstream, particularly sump inlets, should be designed with an overflow as a means for handling large storms.

Installation

Block and Gravel

Place concrete blocks lengthwise on their sides in a single row around the perimeter of the inlet, so that the open ends face outward and not upward. Ends of adjacent blocks should abut. The height of the barrier can be varied by stacking combinations of blocks that are typically 6 or 8 inches high. Blocks

that are stacked should be anchored against movement. Place geotextile filter fabric over the outside vertical face of the concrete blocks. If more than one strip is necessary, overlap the strips by at least 1 foot. Place clean stone against the geotextile filter fabric up to the top of the concrete blocks. Use ½" to ¾" gravel is selected, although other sizes of gravel will perform adequately to protect and weight filter fabric.

Sandbag Barrier

In general, sandbags are appropriate for gently sloping streets where ponded water will not endanger the public or cause property damage. Use sandbags made of geotextile fabric (not burlap) and fill with uniform material such as ½" rock or ¼" pea gravel.

Place one or two layers of overlapping sandbags, and pack them tightly together. A gap of one sandbag on the top row can serve as an overflow spillway from unexpected large storms. Install geotextile filter fabric and aggregate to filter sediment from storm water. Small pipes (2" diameter or smaller) can be placed through the sandbag barrier if covered by filter fabric. Verify that the sandbag barrier is sturdy and adequate to contain ponded water.

Wire Mesh and Gravel

Place hardware cloth or wire mesh over the inlet so that the wire extends a minimum of 1 foot beyond each side of inlet structure. Use hardware cloth or comparable wire mesh with openings from ¼" to ½" size. If more than one strip of mesh is necessary, overlap the strips. As an option, place filter fabric over wire mesh to ensure that sediment and loose fines do not enter the protected inlet. Place clean gravel that is ½" to ¾" size over the wire mesh. The depth of the gravel should be at least 12 inches over the entire inlet opening and extend at least 18 inches beyond the inlet opening in every direction.

Excavated Impoundment

An excavated impoundment can be used in areas where a manhole or inlet has been installed in the ground but possibly has not yet been backfilled. It can function as a sediment trap with a storage capacity of 67 cubic yards per acre of tributary area. Small holes can be drilled into the inlet structure and then later grouted when the temporary inlet protection is no longer needed. Filtering is accomplished by the appropriate size of clean gravel, geotextile filter fabric, or other means.

Geotextile Filter Bag

Install premanufactured product (such as Siltsack according to manufacturer's recommendations. A geotextile filter bag is intended for use in grate inlet structures that drain small areas less than 0.5 acres in size. Due to the potential for clogging, a geotextile filter bag should not be used as the primary device for controlling sediment and erosion. Regular inspection,

maintenance and cleaning is required. Do not use this product in city streets due to the potential for clogging and flooding.

Maintenance

- Inspect all inlet protection devices at least weekly and after every rainfall event. During extended rainfall events, inspect inlet protection devices at least once every 24 hours. Replace clogged aggregate or silt fence fabric immediately. Look for damage caused by large flows. Inspect downstream inlets, pipes, and other infrastructure downstream after severe storms to check for bypassed material.

- Remove sediment from temporary inlet protection methods when sediment reaches 2 or 3 inches deep. More frequent sediment removal is required from paved areas such as streets or parking lots.

- Remove all inlet protection devices within thirty days after the site is stabilized, or when the inlet protection is no longer needed. Bring the disturbed area to final grade and appropriately stabilize all bare areas around the inlet with vegetation. Clean storm drainage system of sediment and debris prior to final inspection.

Limitations

Some forms of temporary inlet protection may encroach onto access roads, streets, parking lots, driveways, or highway traffic; modify designs to allow for emergency overflow or bypass for large storms that may endanger traffic or cause property damage. Sediment removal may be ineffective in high-flow conditions or if storm water runoff contains large amounts of sediment. For drainage areas larger than half an acre, storm water runoff should be routed to a sediment trap or sediment basin designed for larger flows.

Note: This method of inlet protection is applicable where heavy concentration of flows are expected, but not where ponding would cause flooding problems. The City of Memphis has signs that may be used for construction sites to educate potential home buyers in a new subdivision and alleviate flooding concerns during construction.

References

8, 25, 30, 33, 34, 35, 43, 54, 135, 136, 141, 144, 162, 167, 179
(see BMP Manual Chapter 10 for list)

Notes:

1. Use clean aggregate (½" to ¾") such as TDOT #4 or #5 or washed #57.
2. Periodically change old gravel with new clean gravel. Old gravel may be used as backfill material.
3. Blocks stacked on each other must be secured from movement using techniques such as inserting a piece of 6" or 8" wood.

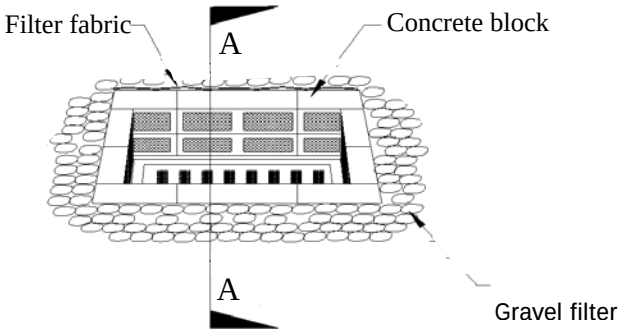

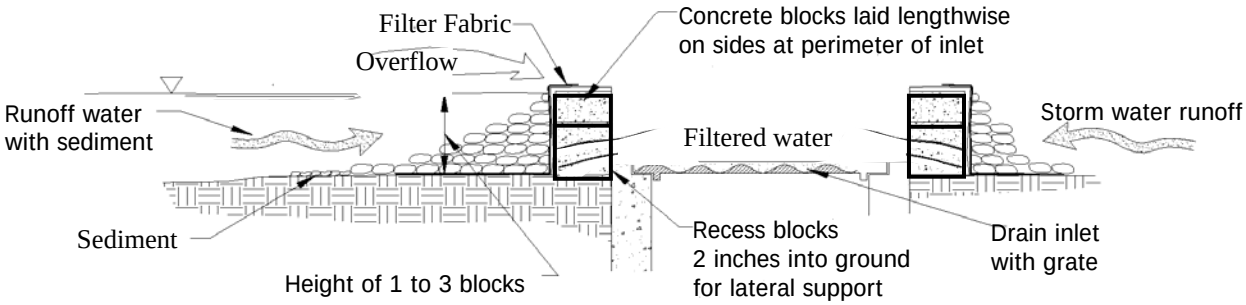

INLET WITHOUT CURB

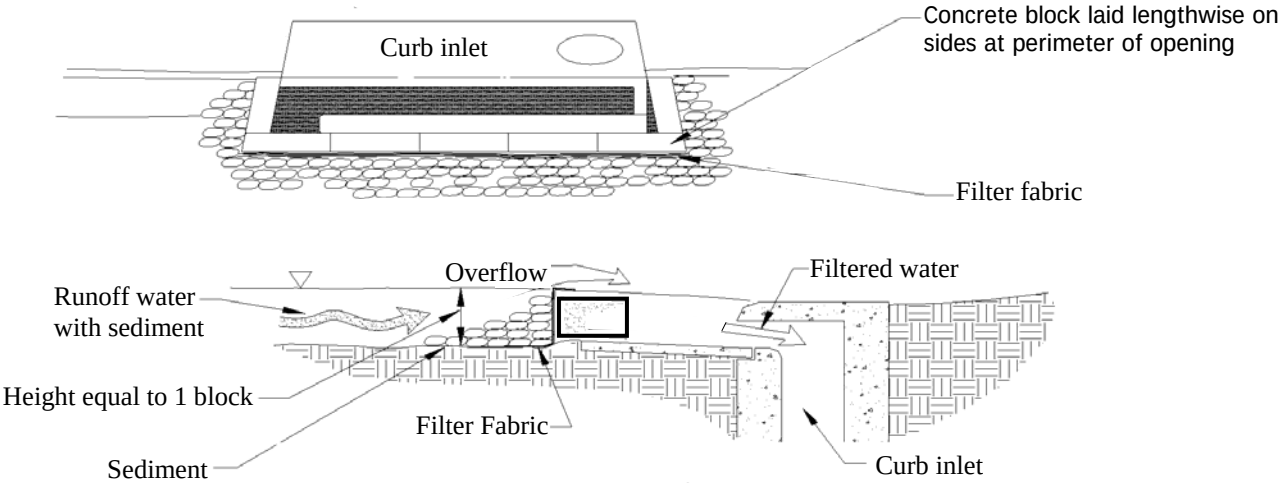

INLET WITH CURB

NOT TO SCALE

Figure ES-24-1
Inlet Protection — Block and Gravel

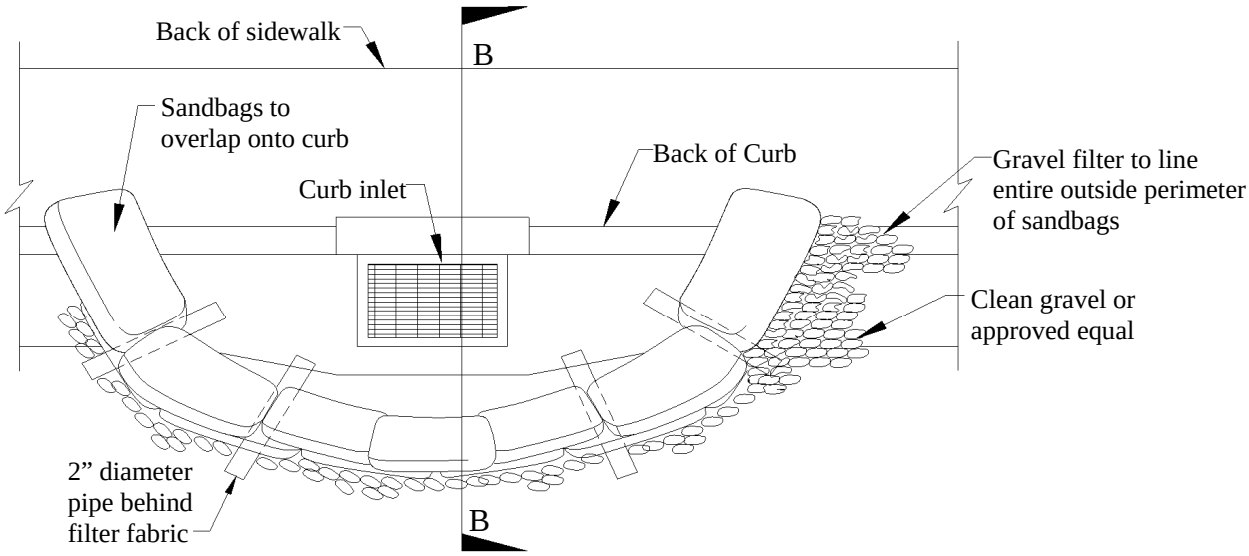

INLET AT TYPICAL PAVED AREAS

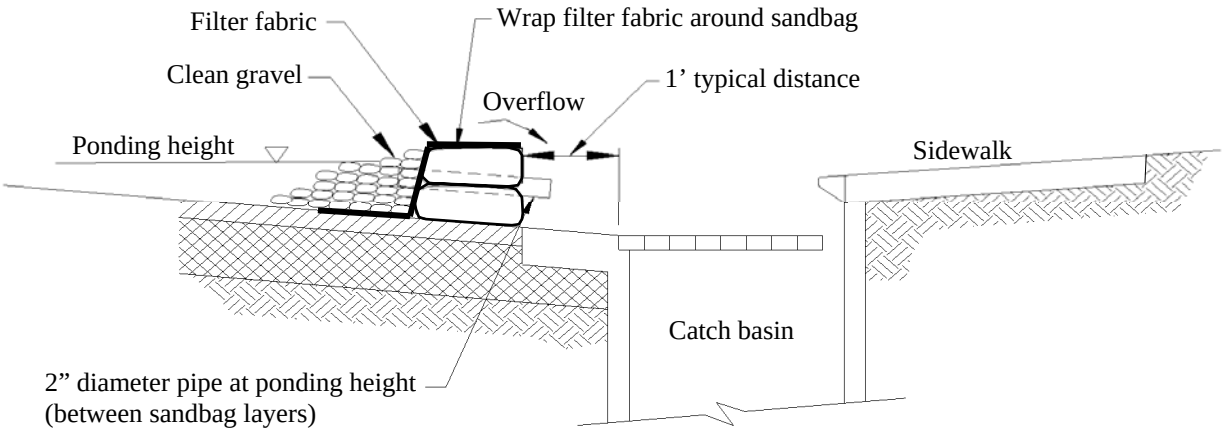

SECTION B-B

Notes:

1. See ES-16, Sandbag Barrier, for more information on sandbag materials and specifications.
2. Use clean aggregate (½” to ¾”) such as TDOT #4 or #5 or washed #57.
3. Periodically replace old gravel with new clean gravel. Old gravel may be used as backfill material.
4. Use geotextile filter fabric for storm water with high content of silt and clay (as shown in Section B-B)

NOT TO SCALE

Figure ES-24-2
Inlet Protection — Sandbag Barrier

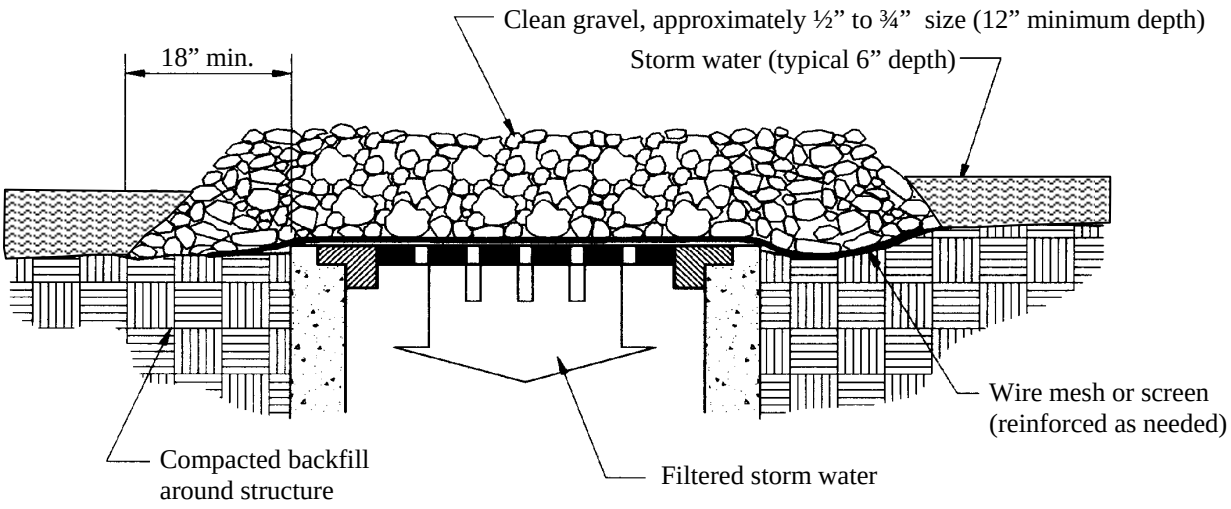

Note:
This method of inlet protection is applicable where heavy concentration of flows are expected, but not where ponding would cause flooding problems. The City of Memphis has signs that may be used for construction sites to educate potential home buyers in a new subdivision and alleviate flooding concerns during construction.

Figure ES-24-3
Inlet Protection — Wire Mesh and Gravel

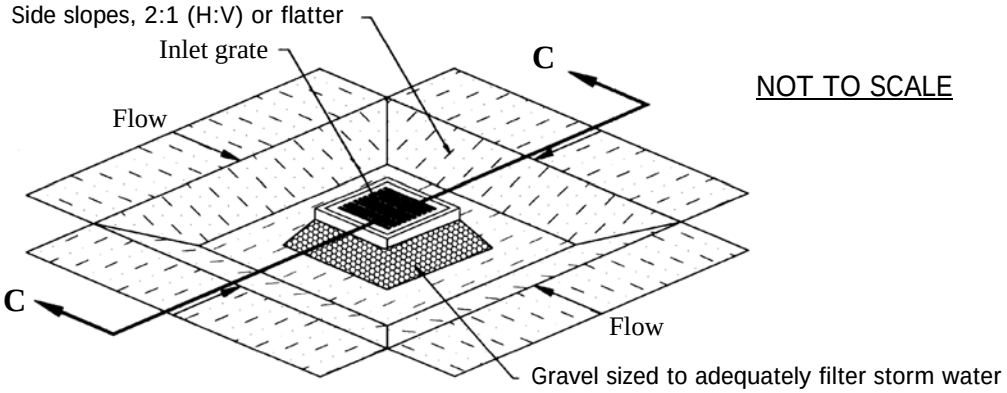

ISOMETRIC PLAN VIEW

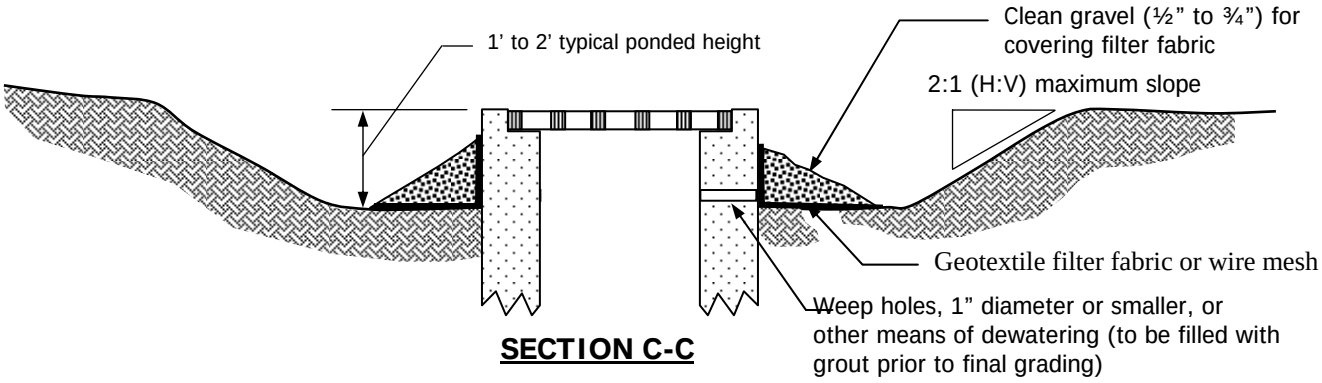

SECTION C-C

Figure ES-24-4
Inlet Protection — Excavated Impoundment

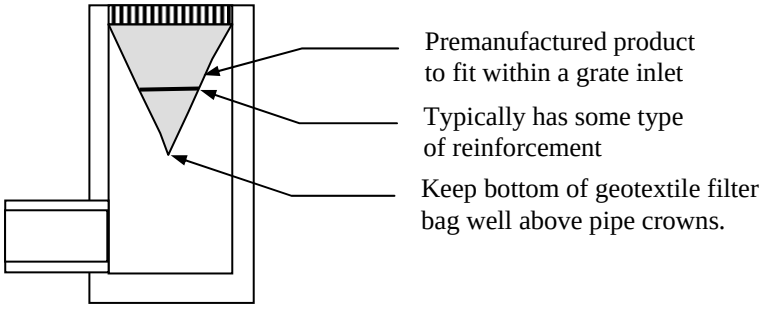

PROFILE VIEW

Notes:

1. Install and maintain geotextile filter bag in accordance with manufacturer's recommendations. Product shown is the Siltsack Sediment Control Device made by ACF Environmental.
2. Regular Siltsack has a grab tensile strength of 300 lbs and puncture strength of 120 lbs. Fabric is woven polypropylene with double stitch.
3. Inspect geotextile filter bag after each rainfall event. Remove sediment as recommended by manufacturer. Do not install geotextile filter bag at locations that may cause flooding in streets or adjacent properties.
4. Regular Siltsack has a flow rate of 40 gallons per minute per square foot of clean geotextile material. The flow rate will be much lower when filled with sediment.

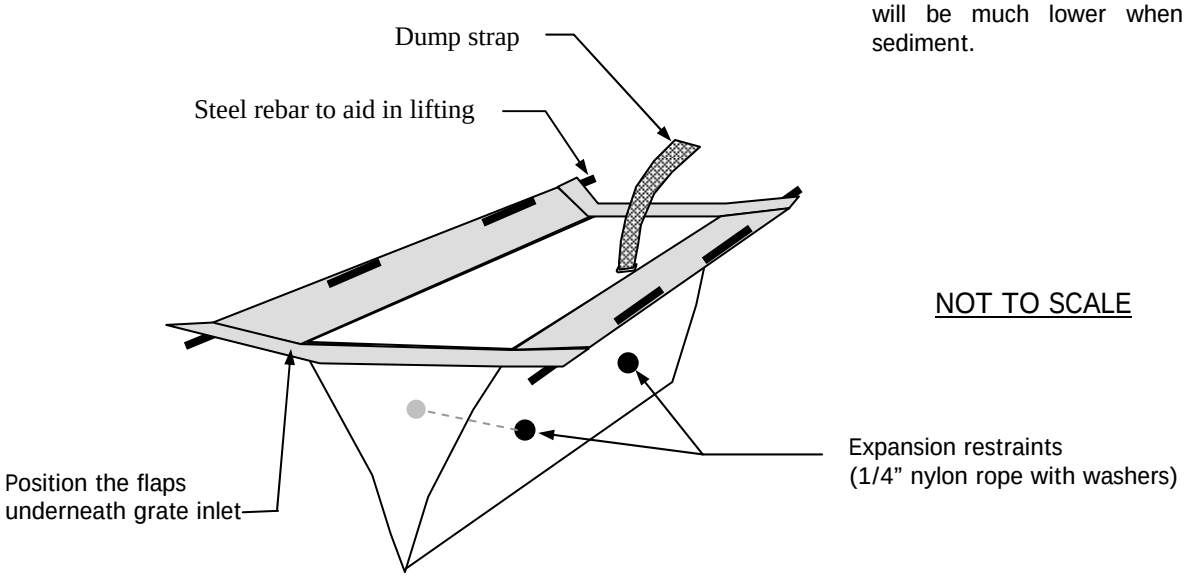

NOT TO SCALE

ISOMETRIC PLAN VIEW

Figure ES-24-5
Inlet Protection — Geotextile Filter Bag

ACTIVITY: Outlet Protection	ES – 25

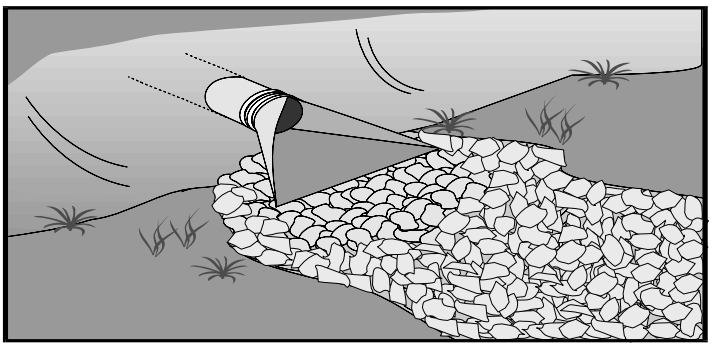

City of Memphis and Shelby County

Targeted Constituents

● Significant Benefit ◗ Partial Benefit ○ Low or Unknown Benefit

● Sediment	○ Heavy Metals	○ Floatable Materials	○ Oxygen Demanding Substances	
○ Nutrients	○ Toxic Materials	○ Oil & Grease	○ Bacteria & Viruses	○ Construction Wastes

Description

Outlet protection for culverts, storm drains, or even steep ditches and flumes is essential to prevent major erosion from damaging downstream channels and drainage structures. Outlet protection can be a channel lining, structure, or flow barrier designed to lower excessive flow velocities from pipes and culverts, prevent scour, and dissipate energy. However, effective outlet protection must begin with efficient storm drainage system design that uses adequately sized pipes, culverts, ditches, and channels placed at the most efficient slopes and grades. Good outlet protection will significantly reduce erosion and sediment by reducing flow velocities.

Suitable Applications

- Outlet protection is needed wherever discharge velocities and energies at the outlets of culverts, pipes, conduits, channels, or ditches are sufficient to erode the immediate downstream reach.

Approach

The design and analysis of riprap protection, stilling basins, impact barriers, and other types of culvert outlets is a complex task to accomplish. The first step is to look for ways to reduce the need for outlet protection by efficient storm drainage system design. The last section of pipe (prior to the outlet of a culvert or storm drain) should not be placed at a steeper grade than necessary to adequately convey the design storm. This may require a deeper-than-usual manhole or inlet for the last section of pipe, but any additional costs are usually offset by reduced erosion and settlement due to lower outlet velocities.

In general, temporary outlet protection is usually specified as dumped riprap. See Figure ES-25-1 and Table ES-25-1 for the selection and size of riprap outlet protection for temporary or permanent installations. Permanent riprap protection should be sized by a professional engineer as part of the storm drainage design, using the guidelines in ES-23 to specify sound and durable crushed rock. Riprap outlet protection is usually less expensive and easier to install than concrete aprons or energy dissipaters. A riprap channel lining is

flexible and adjusts to settlement; it also serves to trap sediment and reduce flow velocities. Due to the highly erodible loess soils in the Memphis area, filter fabric is recommended under the riprap.

Typical energy dissipaters are shown in Figure ES-25-2. There have been many types developed over the years by federal and state agencies such as U.S. Army Corps of Engineers and the U.S. Bureau of Reclamation (USBR). Commonly used varieties of stilling basins (for handling hydraulic jumps in addition to dissipating energy) can include USBR Type II, USBR Type III, USBR Type IV, and USBR Type VI. Reference 160 contains procedures and charts for the detailed design of energy dissipating structures using considerations such as specific ranges for the Froude number, depth of flow, roughness, gradient, discharge rate, and velocity.

Outlet Velocity

The primary factor in selecting the type of outlet protection is determining the outlet velocity for culverts, which is dependent upon the type of flow profile associated with the design storm. The culvert flow may be controlled by the type of inlet, the throat section, the pipe capacity, or by the type of outlet. The type of control may change from outlet control to inlet control, for example, depending on the flow value. Culvert design is fully described in FHWA Hydraulic Design Series No. 5, Hydraulic Design of Highway Culverts (reference 158). For inlet control (including throat section), the outlet velocity is assumed to be normal depth as computed by Manning's equation. For outlet control, the outlet velocity is found by using Manning's equation with the computed tailwater depth or the critical flow depth of culvert, whichever is greater. The entire culvert cross-sectional area is used if the tailwater depth is higher than the top of the culvert opening.

Riprap Aprons

Riprap aprons should not be used to change the direction of outlet flow, for which an impact-type energy dissipater would be more effective. Riprap aprons rely primarily upon a higher Manning's roughness coefficient to slow water velocity into proportions that are manageable by a properly designed channel.

Place a heavy-duty geotextile filter fabric upon prepared subgrade, and carefully anchor to avoid damage or movement. Place riprap without excessive drop heights, avoiding damage by equipment tracks or blades. Dumped rock riprap generally has a higher Manning's roughness coefficient than grouted riprap and is, therefore, more effective at slowing storm water down. However, grouted riprap may be more useful in certain instances. Riprap is generally not adequate at the base of concrete flumes or chutes, and a concrete outlet protection structure is greatly preferred in these instances.

Construct riprap apron at zero percent grade for the specified length L_A and width W_A by using the appropriate D_{50} size of stones interpolated from Table ES-25-1. If a curve is needed within the riprap apron, place within the lower reach of the apron and use larger riprap sizes in the curved section. The basic design procedure is:

1. Compute tailwater depth (using normal flow with Manning's equation) for the downstream receiving channel. Select conditions as being Low Tailwater (typically for an undefined channel or greatly oversized channel) or as being High Tailwater (most defined channel shapes). If conditions are unknown, then compute parameters from both sections of table and use the most conservative value.

2. Compute depth of flow in culvert based upon the particular type of culvert flow control. For inlet control, the outlet velocity is assumed to be normal depth as computed by Manning's equation. For outlet control, the outlet velocity is found by using Manning's equation with the computed tailwater depth or the critical flow depth of culvert, whichever value is greater. The entire culvert cross-sectional area is used if the tailwater depth is higher than the top of the culvert opening.

3. Interpolate values for riprap apron length (L_A) and riprap median size (D_{50}) from the appropriate portion of Table ES-25-1. If the culvert is not flowing full, then adjust these values upwards by the following factors. The median riprap size D_{50} is more sensitive than the apron length L_A. The minimum riprap size D_{50} is 6 inches, which may be specified as TDOT machined Class A-1 riprap as described in ES-23.

Flow depth / Diameter	Increase D_{50} by:	Increase L_A by:
1.00	-----	-----
0.90	-----	-----
0.80	1.10	-----
0.70	1.20	1.05
0.60	1.30	1.10
0.55	1.40	1.15
0.50	1.50	1.20

Energy Dissipaters and Stilling Basins

Structural controls, generally made from precast concrete or from pour-in-place concrete, should be used whenever riprap aprons are inadequate. The design of the energy dissipaters and stilling basins shown in Figure ES-25-2 are discussed in the FHWA publication HEC-14, Hydraulic Design of Energy Dissipaters for Culverts and Channels (reference 160), which can be downloaded at:
http://www.fhwa.dot.gov/bridge/hydpub.htm

Stilling basins are used to convert flows from supercritical to subcritical depths by allowing a hydraulic jump to occur. The stilling basin allows a controlled hydraulic jump to occur within the structure over a wide range of flow conditions and depths. Energy dissipaters and stilling basins must be designed by a professional engineer using hydraulic computations. A primary concern for both energy dissipaters and stilling basins is whether sediment and trash can accumulate. The designs shown in Figure ES-25-2 have been tested thoroughly over the years and present a good starting point for any type of structural outlet protection. TDOT drawing standards include a riprap basin energy dissipater, based upon procedures in HEC-14.

Maintenance

- Inspect outlet protection on a regular basis for erosion, sedimentation, scour, or undercutting. Repair or replace riprap, geotextile, or concrete structures as necessary to handle design flows. Remove trash, debris, grass, sediment, or burrowing animals as needed. Maintenance may be more extensive if smaller riprap sizes are used, as children may tempted to throw or otherwise displace stones and rocks.

Limitations

- Riprap outlet protection may occupy a large area. The specified grade for a riprap apron is zero percent. It may be difficult to handle large amounts of riprap, given that designed outlet protection is usually at or near the project boundary or property line. An easement may be necessary to maintain riprap outlet protection.

- Grouted riprap and concrete structures are subject to upheaval from freeze/thaw action. Weepholes and adequately drained foundations are necessary for these types of outlet protection.

References

30, 35, 139, 141, 158, 160, 162, 167, 179 (see BMP Manual Chapter 10 for list)

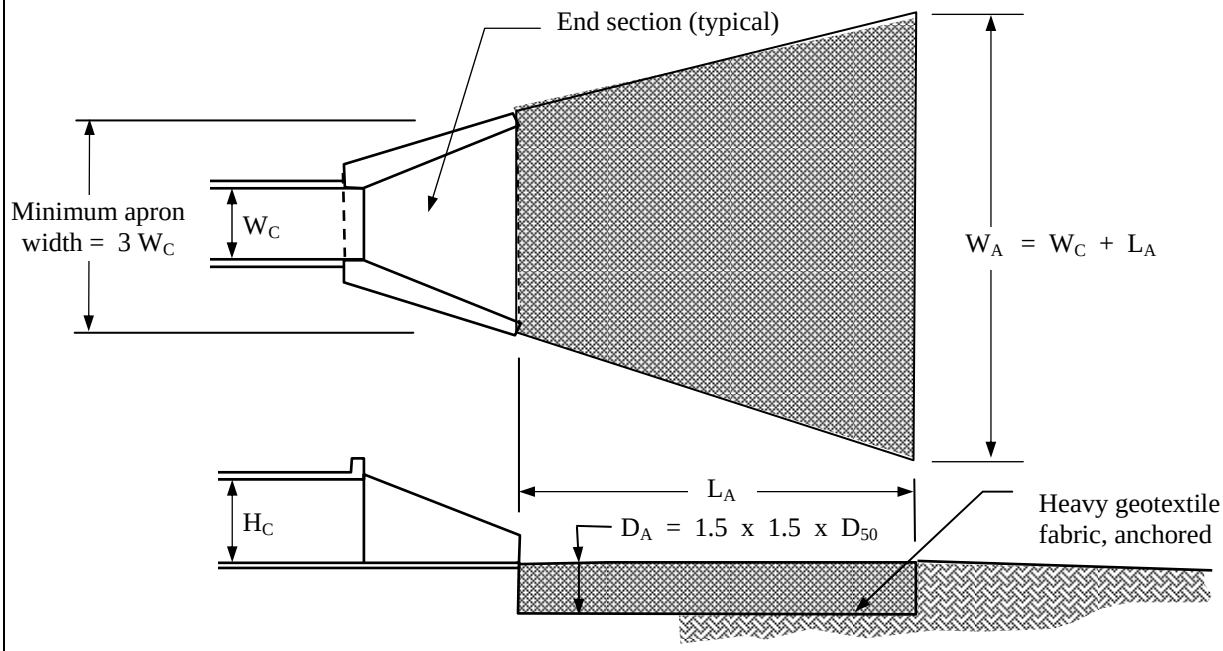

Tailwater < 0.5 H_C and Assuming Full Culvert Flow (Low Tailwater Conditions)

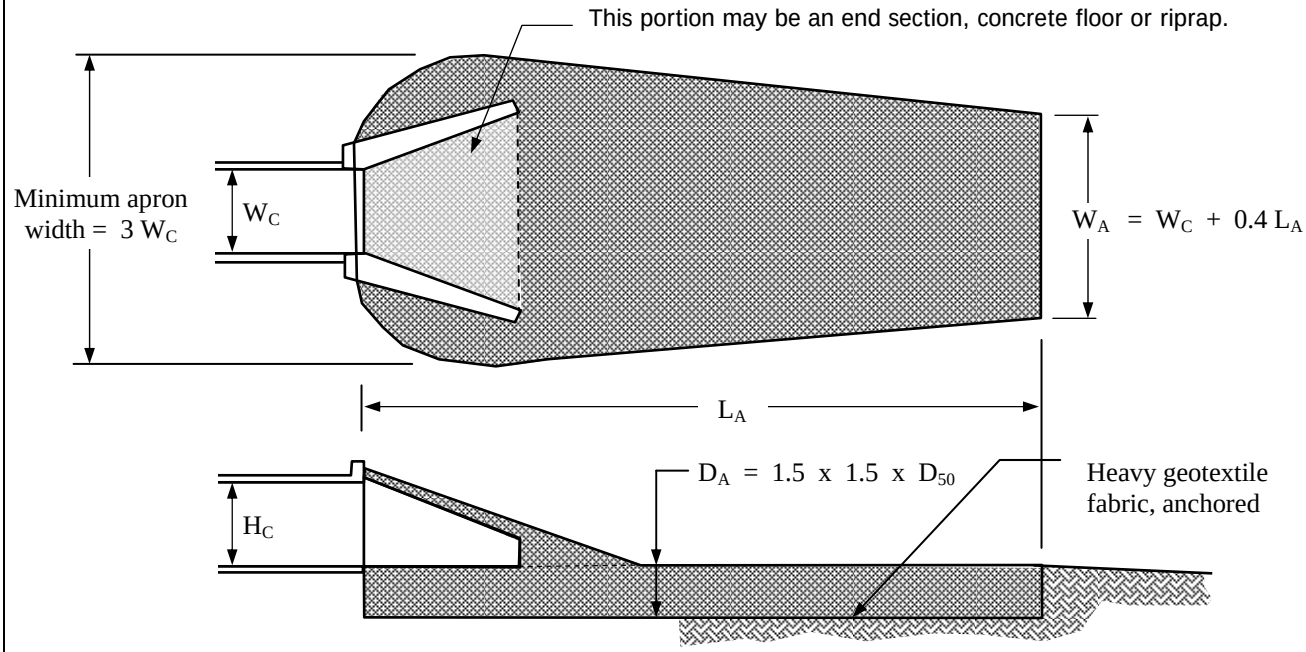

Tailwater > 0.5 H_C and Assuming Full Culvert Flow (High Tailwater Conditions)

NOT TO SCALE

Figure ES-25-1
Riprap Outlet Protection

H_C	=	height of culvert
W_C	=	width of culvert
L_A	=	length of riprap apron
W_A	=	width of riprap apron at end
D_{50}	=	median riprap size (Table ES-25-1)
D_{MAX}	=	maximum size of riprap = 1.5 D_{50}
D_A	=	depth of riprap apron = 1.5 D_{MAX}

TABLE ES-25-1
Selecting Riprap Apron Length (L_A) and Riprap Median Size (D_{50})
(for circular culverts flowing full)

This table is intended to select two parameters for the design of riprap outlet protection based upon outlet velocities that correspond with circular culverts flowing full. Flow values less than the lowest value for the culvert size usually indicate a full-flow velocity less than 5 feet per second, for which riprap is usually not necessary. Flow values greater than the highest value for the culvert size usually indicate that a concrete stilling basin or energy dissipater structure is necessary.

Adjust values upward if the circular culvert is not flowing full based upon outlet conditions. For noncircular pipe, convert into an equivalent cross-sectional area of circular culvert to continue design.

Riprap Aprons for Low Tailwater
(downstream flow depth < 0.5 x pipe diameter)

Culvert Diameter	Lowest value			Intermediate values to interpolate from:									Highest value		
	Q	L_A	D_{50}	Q	L_A	D_{50}	Q	L_A	D_{50}	Q	L_A	D_{50}	Q	L_A	D_{50}
	Cfs	Ft	In	Cfs	Ft	In	Cfs	Ft	In	Cfs	Ft	In	Cfs	Ft	In
12”	**4**	7	2.5	**6**	10	3.5	**9**	13	6	**12**	16	7	**14**	17	8.5
15”	**6.5**	8	3	**10**	12	5	**15**	16	7	**20**	18	10	**25**	20	12
18”	**10**	9	3.5	**15**	14	5.5	**20**	17	7	**30**	22	11	**40**	25	14
21”	**15**	11	4	**25**	18	7	**35**	22	10	**45**	26	13	**60**	29	18
24”	**21**	13	5	**35**	20	8.5	**50**	26	12	**65**	30	16	**80**	33	19
27”	**27**	14	5.5	**50**	24	9.5	**70**	29	14	**90**	34	18	**110**	37	22
30”	**36**	16	6	**60**	25	9.5	**90**	33	15.5	**120**	38	20	**140**	41	24
36”	**56**	20	7	**100**	32	13	**140**	40	18	**180**	45	23	**220**	50	28
42”	**82**	22	8.5	**120**	32	12	**160**	39	17	**200**	45	20	**260**	52	26
48”	**120**	26	10	**170**	37	14	**220**	46	19	**270**	54	23	**320**	64	37

Riprap Aprons for High Tailwater
(downstream flow depth > 0.5 x pipe diameter)

Culvert Diameter	Lowest value			Intermediate values to interpolate from:									Highest value		
	Q	L_A	D_{50}	Q	L_A	D_{50}	Q	L_A	D_{50}	Q	L_A	D_{50}	Q	L_A	D_{50}
	Cfs	Ft	In	Cfs	Ft	In	Cfs	Ft	In	Cfs	Ft	In	Cfs	Ft	In
12”	**4**	8	2	**6**	18	2.5	**9**	28	4.5	**12**	36	7	**14**	40	8
15”	**7**	8	2	**10**	20	2.5	**15**	34	5	**20**	42	7.5	**25**	50	10
18”	**10**	8	2	**15**	22	3	**20**	34	5	**30**	50	9	**40**	60	11
21”	**15**	8	2	**25**	32	4.5	**35**	48	7	**45**	58	11	**60**	72	14
24”	**20**	8	2	**35**	36	5	**50**	55	8.5	**65**	68	12	**80**	80	15
27”	**27**	10	2	**50**	41	6	**70**	58	10	**90**	70	14	**110**	82	17
30”	**36**	11	2	**60**	42	6	**90**	64	11	**120**	80	15	**140**	90	18
36”	**56**	13	2.5	**100**	60	7	**140**	85	13	**180**	104	18	**220**	120	23
42”	**82**	15	2.5	**120**	50	6	**160**	75	10	**200**	96	14	**260**	120	19
48”	**120**	20	2.5	**170**	58	7	**220**	85	12	**270**	105	16	**320**	120	20

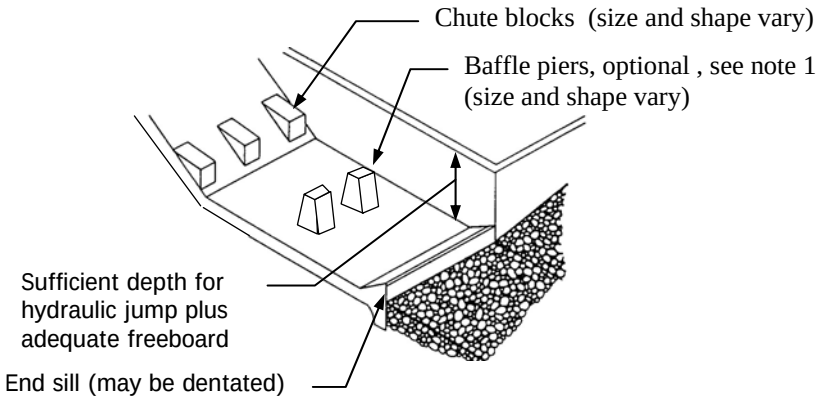

Typical Stilling Basin At End of Paved Flume or Chute

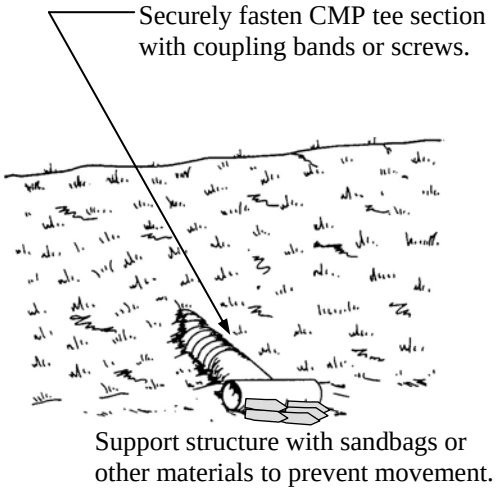

Temporary CMP Energy Dissipater

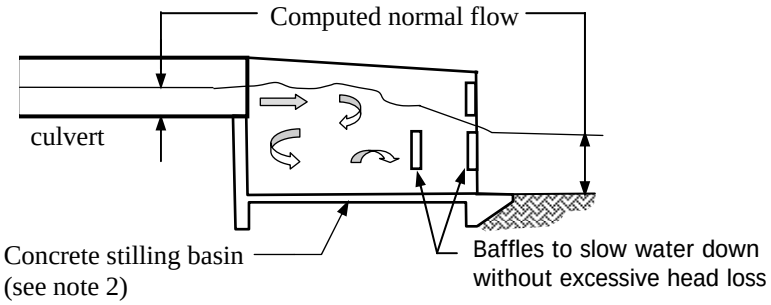

Typical Stilling Basin Using Baffles and Elevation Drop

Notes:

1. This is the basic format for several types of stilling basins. USBR Type II basin does not contain baffle piers, but does have a dentated end sill. USBR Type III basin has baffle piers and a smooth undentated end sill. See HEC-14 for detailed design of concrete structures.
2. Concrete stilling basin should be approximately as wide as the downstream channel. Design baffles to retain sufficient storm water to act as a plunge pool for a wide range of flow values.

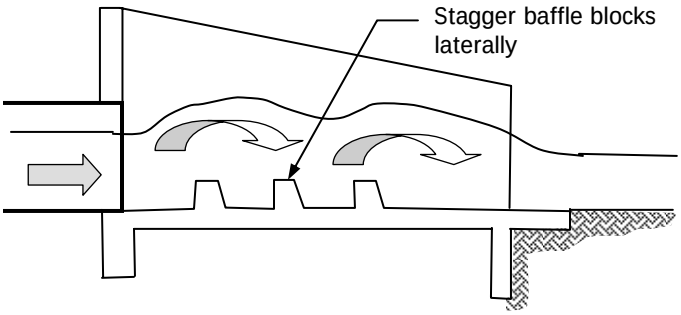

Typical Energy Dissipater — Baffle Blocks Within Headwall

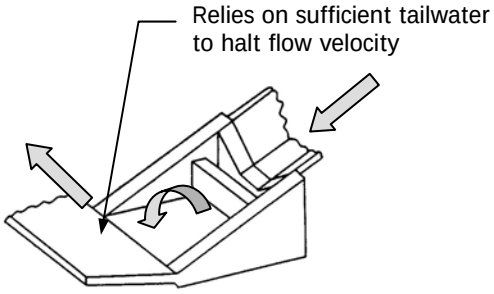

Typical Impact Energy Dissipater (Virginia DOT)

NOT TO SCALE

Figure ES-25-2
Various Energy Dissipaters and Stilling Basins

ACTIVITY: Level Spreader	ES – 26

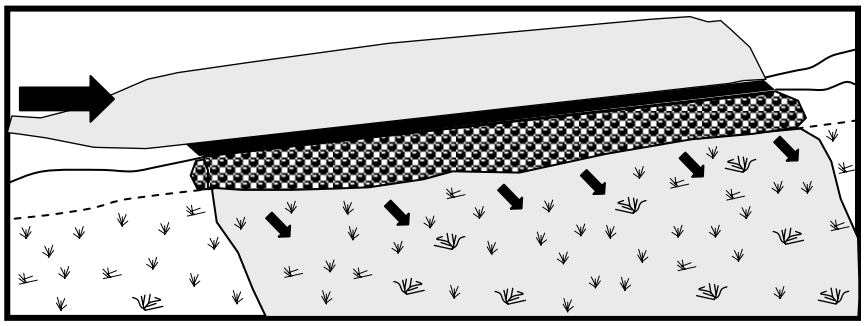

Targeted Constituents

● Significant Benefit ◗ Partial Benefit ○ Low or Unknown Benefit

● Sediment	○ Heavy Metals	○ Floatable Materials	○ Oxygen Demanding Substances	
○ Nutrients	○ Toxic Materials	○ Oil & Grease	○ Bacteria & Viruses	○ Construction Wastes

Description

A level spreader handles concentrated runoff from a ditch or temporary diversion channel and turns it into sheet flow. It should be used only for small flows where a gentle stabilized grass slope is available. A level spreader will significantly reduce erosion and sediment by reducing flow velocities.

Suitable Applications

- Temporary diversion channels with an adjacent gentle stabilized slope, for which downstream drainage infrastructure may not be completed.
- Permanent drainage channels with small flows and an adjacent gentle stabilized slope, for which downstream infrastructure may not be warranted.

Approach

The purpose of a level spreader is to turn concentrated storm water runoff from a ditch into sheet flow, for the purpose of increasing infiltration and reducing volume of runoff. It is meant for use on small flows, typically with a design storm flow less than 5 cubic feet per second (cfs). If storm water runoff is discharged through a culvert as large as 12” diameter, then this runoff is usually too large to be a candidate for a level spreader.

A level spreader (Figure ES-26-1) is essentially a widened portion of ditch, constructed at zero percent grade, with a carefully constructed side-release weir. Do not use fill material to construct a vegetated lip for a level spreader. The widened portion of ditch is triangular in shape, which increases the wetted perimeter and slows down the water.

Maintenance

Inspect temporary level spreaders weekly and after rainfall events. Look for excessive sediment, scour or undercutting, and for concentrated flows downhill from level spreader. Since the level spreader is not a sediment-removing device, additional erosion controls may be necessary. Note any problems and correct promptly.

Inspect permanent level spreaders periodically for scour, undercutting, or settlement, and for concentrated flows downhill from level spreader. Repair or replace level spreader if it is damaged or inadequate to prevent erosion.

Limitations A level spreader can only handle small flows from ditches or channels. It may be prudent to have additional measures (or an emergency overflow or bypass) to handle larger storms. A level spreader with vegetated lip needs to be protected from traffic (even riding mowers) in order to maintain a smooth level surface for the overflow weir.

References **33, 141, 162, 167, 179** (see BMP Manual Chapter 10 for list)

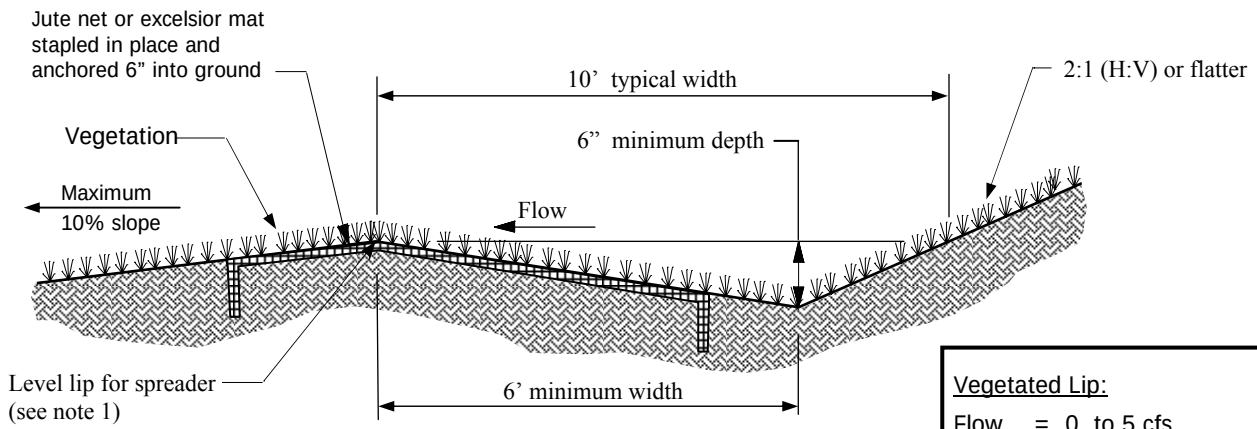

Level Spreader — Vegetated Lip

Vegetated Lip:

Flow = 0 to 5 cfs
Length = 10'
Width = 10'

Rigid Lip:

Flow = 5 to 15 cfs
Length = 2 x flow = 10' to 30'
Width = 10' to 15'

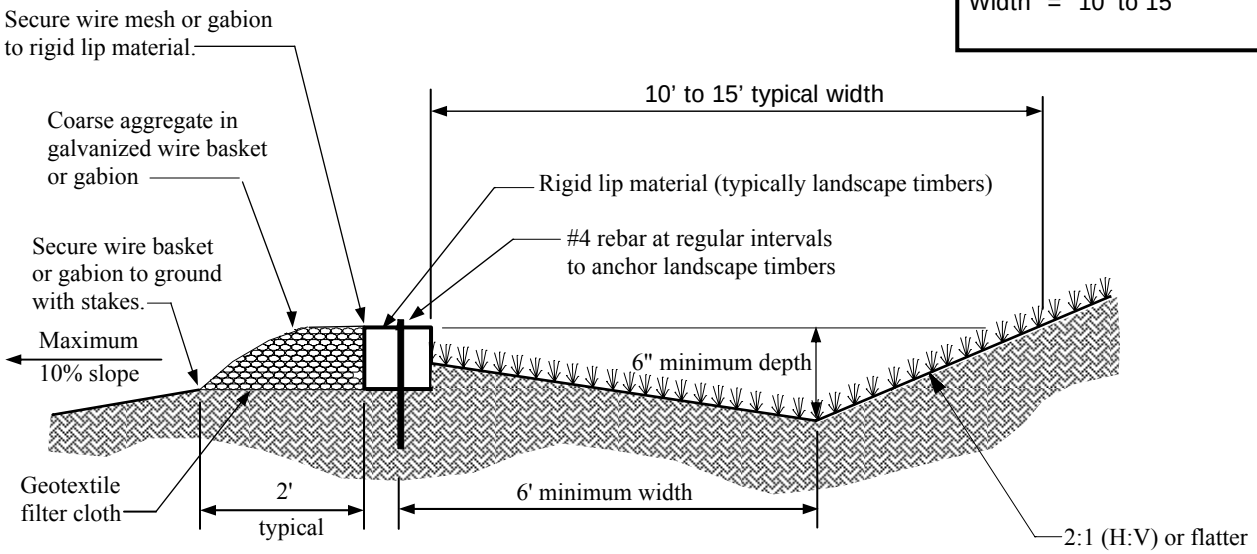

Level Spreader — Rigid Lip

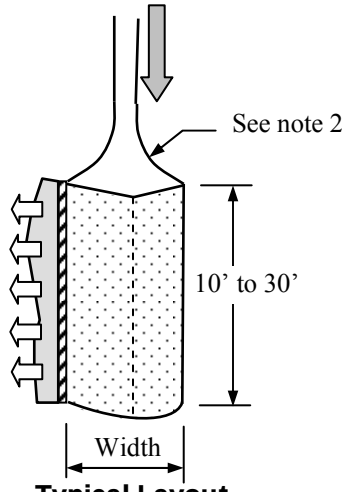

Typical Layout

NOT TO SCALE

Notes:

1. Vegetated lip for level spreader should not be constructed from fill material. Do not allow any traffic (even riding mowers) onto vegetated lip.
2. The last 20' of approach channel should have a grade less than 1%.

Figure ES-26-1
Level Spreaders

ACTIVITY: Floating Sediment Curtain — ES – 27

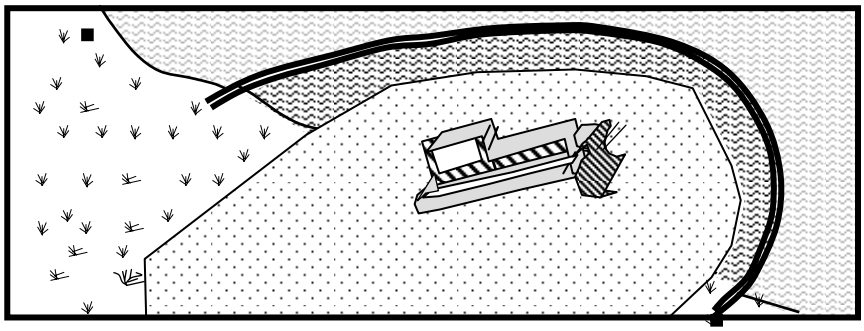

Targeted Constituents

● Significant Benefit ◗ Partial Benefit ○ Low or Unknown Benefit

● Sediment	○ Heavy Metals	○ Floatable Materials	○ Oxygen Demanding Substances	
○ Nutrients	○ Toxic Materials	○ Oil & Grease	○ Bacteria & Viruses	○ Construction Wastes

Description

A floating sediment curtain is used within a stream, river, or lake as a last line of defense to capture sediment and silt. It can also be used in a sediment basin or a settling pond to ensure adequate capture of sediment and silt. A floating sediment curtain will significantly reduce sediment in critical areas such as streams, rivers, and aquatic habitats.

Suitable Applications

- Adjacent to banks where construction, grading or excavation will take place up to the edge of water or within the body of water.
- Within a temporary sediment basin or a settling pond to assist in capture of sediment and silt.
- For dredging projects.

Approach

A floating sediment curtain is made from a heavy geotextile fabric, typically 16 to 20 ounces per square yard, with sufficient properties to capture most types of silt and sediment. Floatation is often achieved by Styrofoam or other very light material that will not degrade in water. Geotextile panels are reinforced and sewn to include the flotation material, chains, hooks, and other connection equipment as needed. Geotextile fabric should have ultraviolet inhibitors and adequate strength to match the application without failing.

Any type of construction or project that takes place within "Waters of the State" is regulated by the Tennessee Department of Environment and Conservation (TDEC). The usual definition for Waters of the State is any blue-line stream that is shown on a U.S. Geological Survey quadrangle map, or any point downstream from where the blue-line stream begins, including lakes, ponds, and wetlands. See TDEC Web site for additional information on requirements for an Aquatic Resource Alteration Permit (ARAP), which must be obtained prior to construction, clearing, grading, or any other disturbance near a body of water.

http://www.state.tn.us/environment/permits/

Floating sediment curtains are not intended for use across flowing streams or rivers.

Although this may appear to be the easiest way to anchor a floating curtain, it is not designed to filter large quantities of flowing water nor can it resist the large forces involved. Floating sediment curtains should not be placed across navigation channels, streams with fish or other migrating aquatic life, or recreational streams.

Floating sediment curtains are commercially available with adequate sizes and strengths for almost any application. Follow manufacturer's recommendations and design guidelines when using these products. In most instances, installation will require boats and anchoring hardware for which an experienced subcontractor is recommended.

Design Considerations

Curtains should generally extend from the water surface to the bottom of the channel, with a reasonable effort to match the bottom profile of channel. Typically allow 10% extra depth for the curtain, and fold the extra depth toward the land side of the curtain. Allow 10% extra length to allow for some curtain flexibility, anchoring points, current, etc.

The choice of whether to use a pervious material (geotextile filter fabric) or an impervious material (nylon reinforced vinyl) depends on the type of silt or sediment expected. A pervious material will allow small amounts of water to pass through, but is generally insufficient to allow a moving stream to pass through.

Curtain joints (as shown in Figure ES-27-1) are typically 50 to 100 feet apart, which allows for flexible deployment choices, easier storage, and reduced stress on the fabric. The alternate connection detail is for situations that have moving water or other stresses, or to assist in anchoring. In general, the curtain should be anchored or staked at every joint using built-in fasteners and loops.

The floating sediment curtain should generally be made of bright colors, such as yellow or orange, for visibility or the curtain should have buoys or floats attached to increase visibility. The floating sediment curtain should have at least 3" freeboard above the water surface. The type and size of buoyant material should be computed to offset the weight of curtain, including the fabric, ropes, chains, and other fasteners used.

Maintenance

- Inspect floating sediment curtain daily to verify that silt and sediment are not bypassing the curtain. Repair or replace curtain as necessary, using materials and methods recommended by the geotextile manufacturer.

- In shallow areas, trapped sediment can be more easily removed than in deep waters. If the curtain has some excess length, it may be possible to carefully raise the bottom edge by swinging it slowly upstream and raising it. Otherwise, equipment with appropriate bucket attachments can be used. It may be less harmful to leave sediments in place than to dredge and remove them.

Limitations

- A floating sediment curtain is the last line of defense in controlling sediment. Use silt fence or straw bale barriers up to the edge of water. Silt fence can be installed in shallow water less than 1' deep, and may be adequate to replace a floating sediment curtain for some situations.
- Floating sediment curtains usually require design and installation by an experienced subcontractor. They are manufactured commercially and are highly recommended.
- Floating sediment curtains are not intended for petroleum spills, chemical spills, or other instances of floating liquids. Use an absorbent boom specifically made to capture the type of spilled liquid.

References **45, 115, 141** (see BMP Manual Chapter 10 for list)

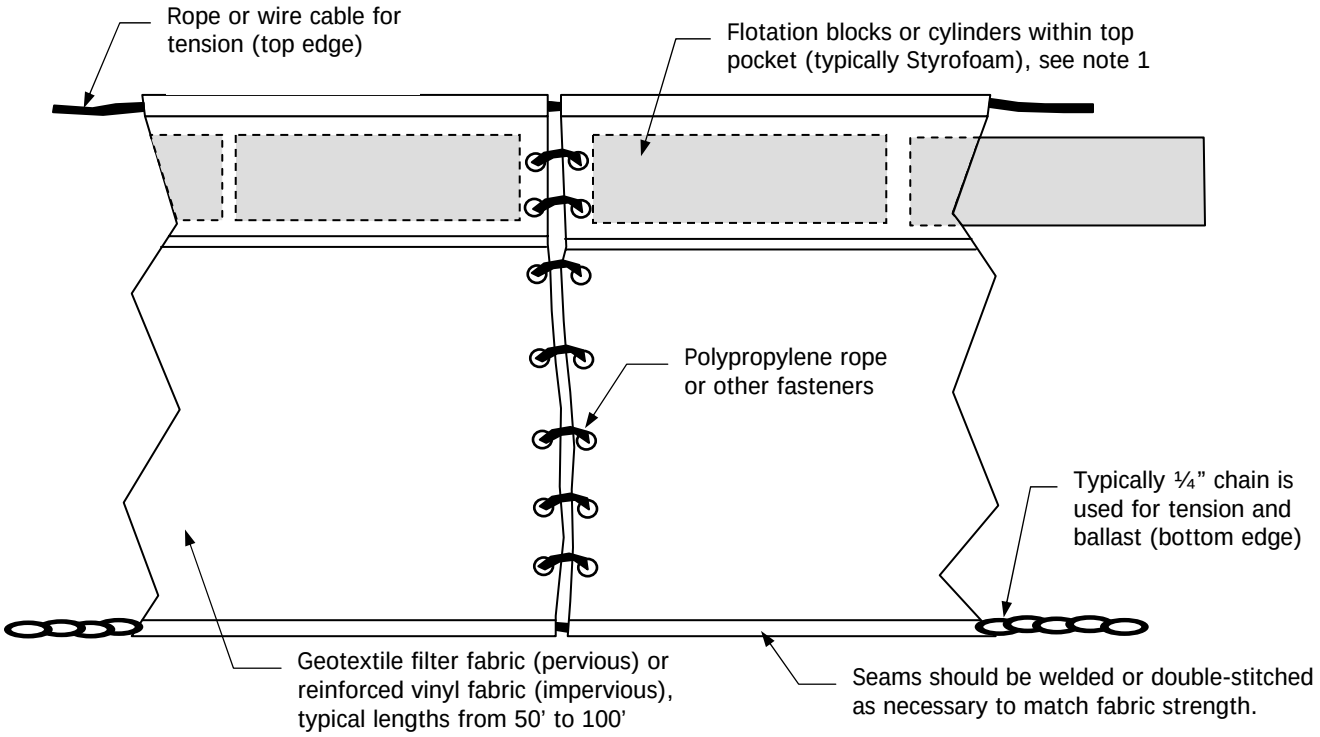

Typical Floating Sediment Curtain

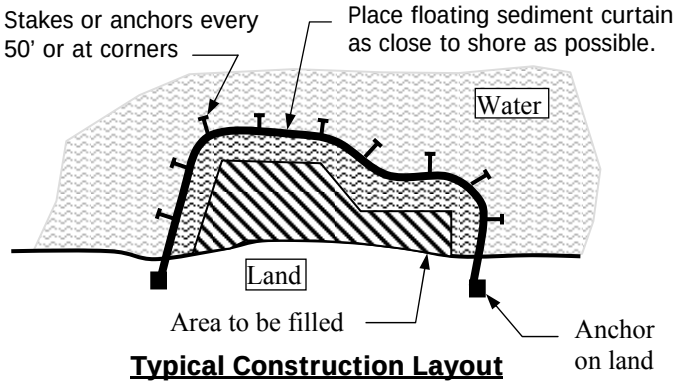

Typical Construction Layout

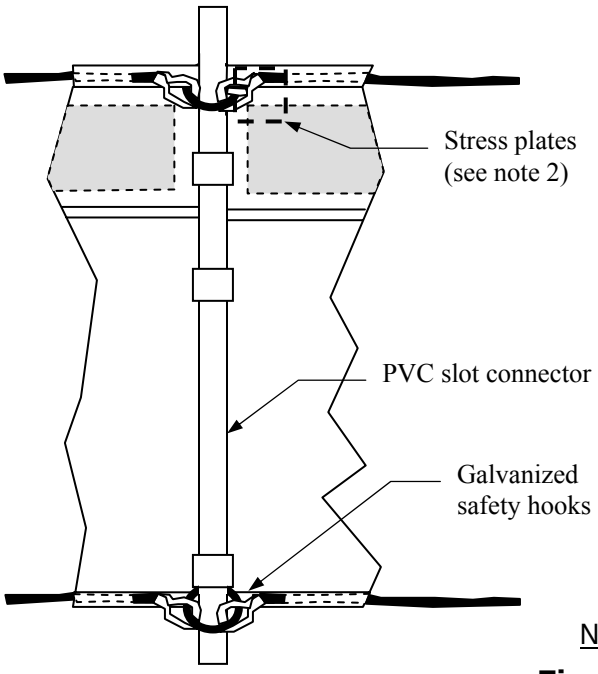

Alternate Connection Detail

Notes:

1. Typical Styrofoam block size ranges from 4"x 4" up to 12"x 2". Size and buoyancy requirements depend on weight and length of curtain.
2. Stress plates may be attached to the fabric and cable in situations with flowing water, high winds, or other strong loads.

NOT TO SCALE

Figure ES-27-1
Floating Sediment Curtain

ACTIVITY: Gabions	ES – 28

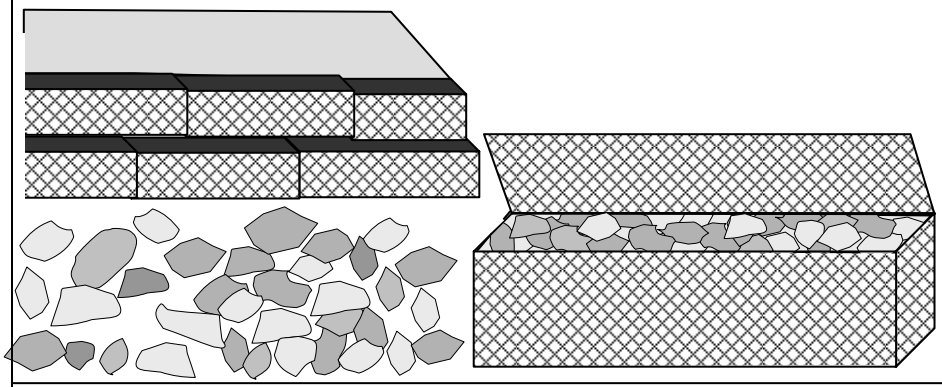

Targeted Constituents

● Significant Benefit ◗ Partial Benefit ○ Low or Unknown Benefit

● Sediment	○ Heavy Metals	○ Floatable Materials	○ Oxygen Demanding Substances	
○ Nutrients	○ Toxic Materials	○ Oil & Grease	○ Bacteria & Viruses	○ Construction Wastes

Description

Gabions are large rectangular wire mesh boxes that are filled with large stone or riprap. Gabions can be used as drainage channels, low retaining walls, bridge abutments, and approaches, culvert headwalls, flow aprons, or drop structures or as general landscaping elements. Thin gabions, typically called revet mattresses or reno mattresses, are used for drainage channels and slopes. The wire mesh is typically galvanized to resist corrosion and may also receive a polyvinyl chloride coating if intended for use in water.

Suitable Applications

- Along a stream bank or drainage channel, as a stable lining that resists erosion.
- On shorefronts and riverfronts, or other areas subject to wave action.
- Near bridge abutments or wingwalls.
- Around culvert outlets and inlets to prevent scour and undercutting.
- On slopes and areas where conditions may not allow vegetation to grow.
- As a low retaining wall in non-critical areas or as a landscaping element.

Advantages

- A gabion is a manufactured engineering product that can be installed in a variety of situations. The manufacturer provides design guidelines and detailed instructions.

- Gabions are flexible, and minor settling can be accommodated. Gabions can be easily adapted and fitted around pipes and other structures.

- Gabions are permeable and are not subject to hydrostatic pressure buildup. With careful maintenance, gabions allow vegetation to grow.

- Skilled labor (other than an equipment operator) is not needed for assembly and filling of gabions. Gabions can be assembled on the project site in difficult terrain. Gabions are inexpensive when compared to rigid structures and retaining walls.

Disadvantages

- Gabions must be carefully constructed in order to properly function for many years. There are many instances of gabion failure (see the "Limitations" section later in this BMP). Wire mesh is subject to corrosion and physical damage.

- Gabions are not very attractive in many situations, often due to poor maintenance.

Gabions are a structural element (similar to a retaining wall) that must be professionally designed. Foundations and surcharged loads must be considered.

Design Considerations

A gabion wall is the equivalent of a gravity-design retaining wall. Analysis for a gabion wall should include basic computations for structural failure such as sliding, overturning, and settlement. In structural situations for walls over 4 feet high, this will require the design of a professional engineer who will consider field conditions, quality of materials, surcharged loads such as vehicle traffic, adequate drainage, foundations, etc. A gabion wall should not be specified just because the project designer is not willing to perform structural calculations for a concrete retaining wall.

A geotextile filter fabric is usually placed beneath gabions to maintain separation from underlying soils. Also, a filter fabric is necessary within stream channels to avoid loss of fine-grained soils. The filter fabric should be anchored securely using anchor trenches, stakes, staples, sewing, or a combination of methods. A layer of aggregate or sand can also be placed beneath gabions to maintain separation from underlying soils, in addition to filter fabric. In general, a filter fabric is more reliable with much smaller installation costs. See ES-23, Riprap, for further discussion of using aggregate or sand as a granular drainage filter.

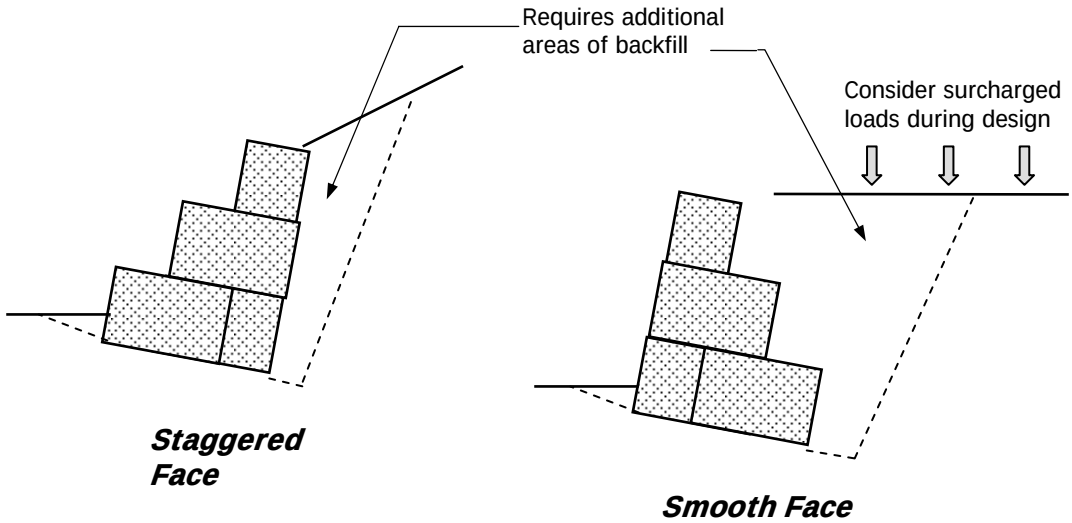

Figure ES-28-1
Typical Gabion Wall Geometry

The wire mesh, in addition to being galvanized, can also be coated with polyvinyl chloride to further resist deterioration. The wire mesh should have multiple twists in order to resist unraveling or falling apart. Since the wire mesh will eventually corrode and fail, gabion wall design should consider overall stability without the wire mesh. Soil and dirt may or may not fill the stone voids to act as a bonding agent. Or trees can help to reinforce a gabion structure. This will not generally occur at locations in or near flowing water, and grout can be specified in critical areas.

Gabion applications for slope stabilization, where wave action or flowing water is not a concern, should be sized for stability. Angular riprap or crushed rock typically has a natural angle of repose in the neighborhood of 40°, so that a slope of 1.5 to 1 would result for most slopes. See ES-23, Riprap, for discussion of slope stability and average stone size, D_{50}. The angle of repose does not take into account any external forces (such as vehicles, people, storms, groundwater, earthquakes, other ground vibrations). Sliding may occur on geotextile filter fabric that is not sufficiently anchored. Slope stability analyses should be performed by a professional engineer for all gabion installations that are critical or potentially hazardous.

Installation

Installation of gabions must be in accordance with the manufacturer's instructions and according to the design documents. Installation should be accomplished within a short time frame (one or two days) to minimize potential for damage from storm water runoff.

General Subgrade Preparation

- Clear and grade the area of trees, brush, vegetation, and unsuitable soils. Provide equipment access as necessary for earthwork and handling of large rocks. Prepare the subgrade to the specified depth necessary for installation of gabions. Compact subgrade firmly to prevent slumping or undercutting. Excavate anchor trenches as necessary for installation of geotextile filter fabric.

- Install geotextile filter fabric to maintain separation of rock material with the underlying soil. Geotextile filter fabric should be placed so that it is not stretched tight and conforms closely to the subgrade. Secure filter fabric by using anchor trenches, stakes, staples, sewing, or any other means necessary according to manufacturer's recommendations.

- Place a layer of aggregate or sand (if specified by design for use as a bedding layer or as a granular filter) so that the layer is smoothly graded and well-compacted. A typical layer of aggregate or sand is 4 inches thick when used only as a bedding material. A granular filter of aggregate or sand is usually 6 inches thick.

Wire Mesh and Stone

- Fold each gabion panel to the proper shape, using heavy gauge wire as recommended by the manufacturer. Reinforce panels as necessary. Lace all contact edges for adjacent gabions as construction proceeds. Joints are staggered and interlocked for gabion walls to provide maximum stability.

- Use external anchors and tensioning ropes as needed to ensure that the gabions are properly squared and vertical. Typically the manufacturer will specify that connecting wires should be used between each lift.

- Place hard durable stone in lifts 12 inches thick. The lifts should be thoroughly tied together with large stones protruding from one layer into the other. The average depth is usually determined by frequent measurements throughout installation. Any change in thickness should be accomplished gradually.

- Small gabion installations typically use a track loader bucket or a backhoe bucket. For large gabion installations, it may be beneficial to use a conveyor or crane. Minimize drop height to avoid damaging the wire mesh gabion or the underlying geotextile cloth. Adjust stones by hand in order to prevent large gaps or voids. Verify that the stone surfaces bear against each other for structural integrity.

- The typical stone gradation is between 4 to 8 inches, such that all stone will be retained by the particular mesh size. Hand placement of stones may be used at locations to improve the appearance of the exposed gabion faces.

- Close lids securely using lace or other fasteners as recommended by the manufacturer. If the wire mesh has been cut, then securely fasten to other parts of the gabion structure.

Grout (optional)

- In most cases, grouting is not necessary. Grouting may be desirable at some locations where flowing water may cause scour or settlement. Grout should be composed of one part Portland cement and four parts of sand measured by volume, and then mixed thoroughly with sufficient water to a consistency that allows the grout to flow into and completely fill the voids.

- When grouting is used, prevent earth or sand from filling the spaces between the stones before the grout is poured. Immediately before pouring grout, the stones should be wetted by sprinkling. Carefully finish the grouted surface using small hand tools, and remove excess grout without disturbing gabion structure. Allow grout to harden and set before any storm water is received. Keep grout moist with water that is free from salt or alkali for a period of not less than 72 hours.

Limitations

A gabion wall is a structural element (similar to a retaining wall) that must be professionally designed and carefully constructed. Gabion installations can fail or deteriorate for many of the following reasons:

Foundation —
- Soil is not suitable for use as a structural foundation.
- Foundation is not adequately compacted and prepared.
- Flowing water erodes the soil underneath or behind the gabion.
- Geotextile filter fabric is not used beneath gabion to retain fine soils.
- Erosion or scour occurs beneath the gabion structure.

Installation —
- Not following manufacturer's instructions for wires, fasteners, and lacing.
- Ordering the wrong gradations of large stone.
- Not using lifts to place stone, or not adjusting stones by hand to fill voids.
- Failure to protect the wire mesh gabion during the process of unloading stones.
- Improper or inadequate backfill.

Design —
- Prevent surcharged loads above gabion wall unless specifically designed.
- Displacement may occur if the slopes are too steep.

Maintenance

Gabions typically require very little maintenance. Inspect gabion installation regularly for settlement, scour, damaged wire mesh, or wire corrosion. Periodically check for excessive growth of bushes, trees, weeds, and other vegetation. Remove vegetation as needed to maintain channel flow capacity and prevent damage to gabions.

At many locations the wire mesh will eventually fail (particularly near flowing water), so it is important to design a gabion retaining wall to remain structurally sound without relying on the wire mesh. If long-term problems are noted, a major redesign and construction effort may be necessary.

References

141, 159, 161, 162, 167, 179 (see BMP Manual Chapter 10 for list)
Typical vendor information from: Maccaferri
http://www.maccaferri.com
TerraAqua http://www.terraaqua.com/

ACTIVITY: TDOT Standard Details for Erosion Control	ES – 29

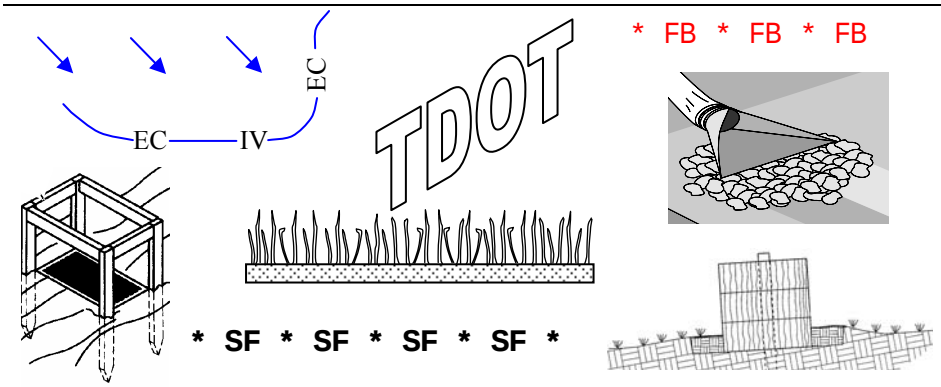

Targeted Constituents				
● Significant Benefit		◗ Partial Benefit	○ Low or Unknown Benefit	
● Sediment	○ Heavy Metals	○ Floatable Materials	○ Oxygen Demanding Substances	
○ Nutrients	○ Toxic Materials	○ Oil & Grease	○ Bacteria & Viruses	◗ Construction Wastes

Description

Standard details can be obtained from the Tennessee Department of Transportation (TDOT) by contacting the main office in Nashville. Alternatively, TDOT standard details are available at the following Web site:

http://www.tdot.state.tn.us/Chief_Engineer/engr_library/design/Std_Drwg_Eng.htm

There are well over 300 standard detail drawings that are produced by TDOT. These drawings are primarily intended for state roadway construction projects, but are also widely used by public and private entities for all types of construction work.

TDOT standard details are grouped into seven categories. This BMP only lists the standard details for one category: Erosion Control and Landscaping. Other categories include various types of drainage items and structures (such as TDOT standard catch basins, manholes, headwalls, culverts, etc).

Approach

There are some differences between TDOT standard details and the various details in the City of Memphis and Shelby County BMP Manual. In most cases, the differences are relatively minor. Use the more stringent standard whenever possible to ensure adequate erosion and sediment control. The phrase "If something is worth doing, then it is worth doing right" is always applicable to every type of construction project, including erosion control.

TDOT standard details may not be altered or modified without the express consent of the TDOT organization. Portions of TDOT standard details may be redrawn, as long as the resulting detail is not then labeled as being a TDOT standard detail.

Most standard details refer to the various sections and pay items in the TDOT Standard Specifications for Road and Bridge Construction (reference 172). This reference can be obtained from TDOT by contacting the main TDOT office in Nashville, or by downloading from the following Web site: http://www.tdot.state.tn.us/construction/specs.htm

Limitations

Verify that the TDOT standard detail is appropriate for the situation. Verify that the dimensions and slopes allow for proper installation of erosion control measures. Erosion control measures must be regularly inspected and maintained in the field. Consult the TDOT Standard Specifications for Road and Bridge Construction for a complete description of materials.

List of Details

The following list only contains the TDOT standard details under the category Erosion Control and Landscaping.

Drawing #	Title
RD-L-4	Standard Legend for Erosion and Sediment Control
EC-STR-1	Pay Items, General Notes & Temporary Dewatering Structure
EC-STR-2	Temporary Sediment Filter Bags
EC-STR-3D	Temporary Enhanced Silt Fence
EC-STR-3E	Erosion Control Fabric Joining Details
EC-STR-4	Temporary Erosion Ditch Check Using Enhanced Silt Fence
EC-STR-4A	Temporary Erosion Ditch Check Using Enhanced Silt Fence In A Triangular Cross-Section Ditch
EC-STR-5	Straw or Hay Bale or Fabric Temporary Erosion Checks
EC-STR-6	Rock Check Dams
EC-STR-7	Temporary Sediment Trap with Temporary Silt Screen Check Dam
EC-STR-11	Rock Silt Screens
EC-STR-12	Temporary Rock Sediment Dam
EC-STR-13	Temporary or Permanent Rock and Earth Sediment Dam
EC-STR-15	Sediment Basin Type I
EC-STR-16	Sediment Basins Riser and Collar Appurtenances
EC-STR-17	Sediment Basin Type I Dam Details
EC-STR-19	Catch Basin Protection
EC-STR-21	Permanent Rip-Rap Basin Energy Dissipater
EC-STR-25	Temporary Road Stabilization and Temporary Culvert Crossing
EC-STR-27	Temporary Slope Drains and Berms
EC-STR-29	Permanent Erosion Pipe (Slope Drain)
EC-STR-31	Temporary Diversion Channels
EC-STR-34	Installation Detail for Erosion Control Blankets
EC-STR-36	Installation Detail for Flexible Channel Liner
EC-P-10	Typical Roadway Landscape Planting Details
EC-P-11	Typical Mature Plant Spread and Criteria for Proximity to Roadway
EL-W-1	Details of Tree Walls
EL-W-2	Standard Gravity-Type Retaining Walls

The first drawing (RD-L-4) contains a standardized legend for TDOT projects. This legend is not required for erosion control drawings in the City of Memphis and Shelby County, and is only listed here as an example.

Remember to check the TDOT website to verify the latest revision date prior to using the TDOT standard details in a set of construction plans.

http://www.tdot.state.tn.us/Chief_Engineer/engr_library/design/Std_Drwg_Eng.htm

References **172, TDOT Web sites** (see BMP Manual Chapter 10 for list)

ACTIVITY: TDEC Erosion & Sediment Control BMPs	ES – 30

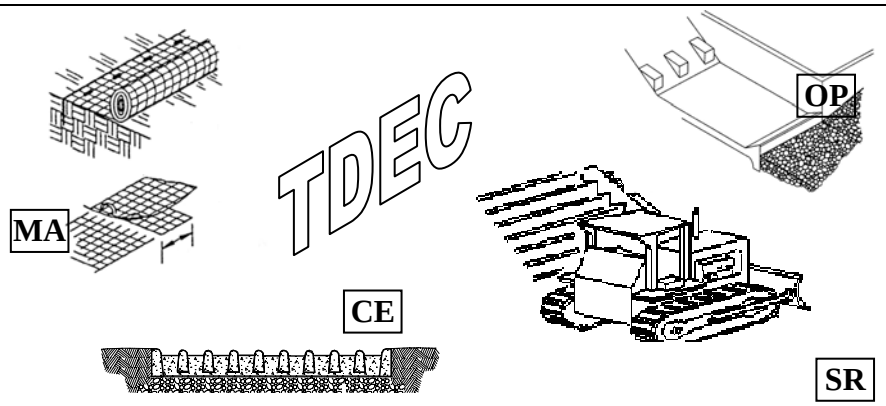

Targeted Constituents

● Significant Benefit ◗ Partial Benefit ○ Low or Unknown Benefit

● Sediment	○ Heavy Metals	○ Floatable Materials	○ Oxygen Demanding Substances	
○ Nutrients	○ Toxic Materials	○ Oil & Grease	○ Bacteria & Viruses	◗ Construction Wastes

Description

Statewide BMPs are available in the Tennessee Erosion and Sediment Control Handbook (reference 196). This reference is available from the Tennessee Department of Environment and Conservation (TDEC) at the following Web site:

http://www.state.tn.us/environment/wpc/sed_ero_controlhandbook

There are three basic categories for the statewide erosion control BMPs: Vegetative Practices, Structural Practices, and Stream Alteration Practices.

Approach

There are many differences between the TDEC statewide BMPs and the various details in the Memphis and Shelby County BMP Manual. In most cases, the differences are relatively minor. Use the more stringent standard whenever possible to ensure adequate erosion and sediment control. In cases where dimensions or methods conflict, use the Memphis and Shelby County BMP Manual.

TDEC BMPs may not be altered or modified without the express consent of the TDEC organization. A portion of the TDEC BMP may be redrawn, as long as the resulting detail is not then labeled as being a standard TDEC BMP.

Verify that the TDEC BMP is appropriate for the situation. Verify that the dimensions and slopes allow for proper installation of erosion control measures. Erosion control measures must be regularly inspected and maintained in the field. Consult the Memphis and Shelby County BMP Manual for additional information and to compare dimensions.

List of BMPs

The following tables contain the TDEC BMPs as organized in the Tennessee Erosion and Sediment Control Handbook (reference 196). For each BMP, the most similar BMP is also listed from the Memphis and Shelby County BMP Manual.

TDEC Code	# Pages	Vegetative Practices (7 BMPs)	Most Similar Memphis and Shelby County BMP
BF	3	Buffer Zone	------
MU	2	Disturbed Area Stabilization With Mulch	ES-07
PS	6	Disturbed Area Stabilization With Permanent Vegetation	ES-10
SO	4	Disturbed Area Stabilization With Sod	ES-09
TS	2	Disturbed Area Stabilization With Temporary Vegetation	ES-08
MA	6	Erosion Control Blanket/Matting	ES-11
PAM	2	Polyacrylamide	------

TDEC Code	# Pages	Structural Practices (17 BMPs)	Most Similar Memphis and Shelby County BMP
CD	3	Check Dam	ES-13
CE	4	Stabilized Construction Site Access	ES-01
CRS	3	Construction Road Stabilization	ES-03
DW	5	Dewatering Structure	AM-12
DI	4	Diversion	ES-21
FR	3	Filter Ring	------
GA	3	Gabion	ES-28
GE	2	Geotextile	ES-12
GT	5	Gradient Treatment	ES-04
RR	9	Riprap	ES-23
SB	24	Sediment Basin	ES-19
ST	5	Sediment Trap	ES-18
SF	8	Silt Fence	ES-14
SD	3	Slope Drain	ES-21
IP	8	Storm Drain Inlet Protection	ES-24
OP	6	Storm Drain Outlet Protection	ES-25
SR	2	Surface Roughening	ES-05

TDEC Code	# Pages	Stream Alteration Practices (3 BMPs)	Most Similar Memphis and Shelby County BMP
SDC	4	Stream Diversion Channel	------
TSC	5	Temporary Stream Crossing	ES-03
SBS	3	Bioengineered Stream Bank Stabilization	ES-20

In addition to the BMPs, the Tennessee Erosion and Sediment Control Handbook has appendices to provide guidance for state requirements on construction permits. The handbook can be obtained free from the TDEC Web site, or purchased for a reasonable fee at the TDEC office at 2510 Mt. Moriah Road, Suite E-645 in Memphis.

Appendix A — Construction General Permit (CGP)
Appendix B — Example Storm Water Pollution Prevention Plan (SWPPP)
Appendix C — Aquatic Resource Alteration Permit (ARAP)
Appendix D — Additional Resources and References

The statewide NPDES program requires TDEC permits for all construction with disturbed areas greater than one acre.

References **196, TDEC Web site** (see BMP Manual Chapter 10 for list)

ACTIVITY: Non-Storm-Water Discharges to Storm Drains	IC – 01

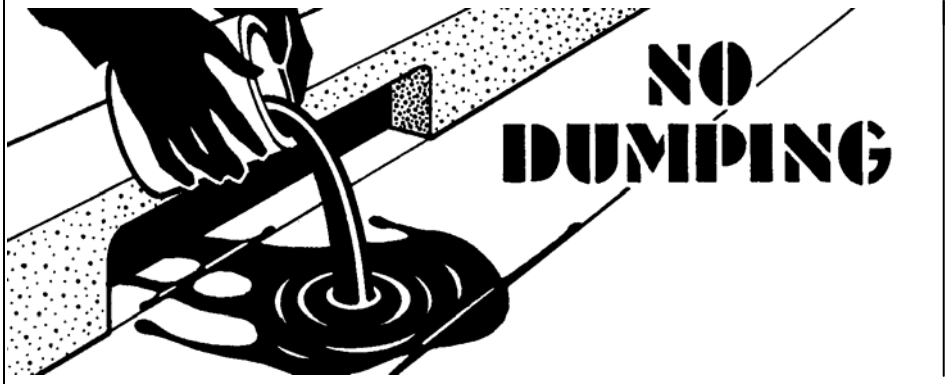

Targeted Constituents				
● Significant Benefit		◗ Partial Benefit	○ Low or Unknown Benefit	
○ Sediment	● Heavy Metals	◗ Floatable Materials	● Oxygen Demanding Substances	
● Nutrients	● Toxic Materials	● Oil & Grease	● Bacteria & Viruses	◗ Construction Wastes

Description

Eliminate non-storm-water discharges to the storm water collection system. Non-storm-water discharges may include oils, paints, acids, solvents, process wastewaters, cooling waters, wash waters, and sanitary wastewater. This task will help eliminate all types of pollution such as nutrients, heavy metals, toxic materials, floatable debris, oil and grease, bacteria and viruses, and oxygen demanding substances.

Approach

Non-storm-water discharges to the storm water collection system may include any water used directly in the manufacturing process (process wastewater), non-contact cooling water, outdoor secondary containment water, vehicle and equipment wash water, sink and drinking fountain wastewater, sanitary wastes (including “gray water” discharged from washing machines or dishwashers), or other wastewaters.

In addition to mechanical discharges, employees or subcontractors could dump or pour materials directly into a storm drain or open channel. Common substances illegally dumped on the street or directly into the storm drain system and creeks include: paint, used oil, automotive fluids, construction debris, chemicals, fresh concrete, leaves or grass, mop water, and pet wastes. All of these wastes can cause quality problems for storm water and receiving waters as well as clog the storm drain system itself. Table AM-01-1 in the Employee Training BMP fact sheet has disposal alternatives for common types of waste. The principal goal is to eliminate all substances (liquid or solid) that do not belong in storm water.

Many businesses, commercial facilities and industries are required to obtain a National Pollutant Discharge Elimination System (NPDES) permit as part of their operations. Requirements to identify and eliminate non-storm-water discharges are integral to every NPDES permit. Keys to this activity are information and investigation.

Application

The current storm water ordinance specifically describes what is allowable to discharge into the storm water; all other discharges are prohibited by ordinance. The following non-storm-water discharges are allowable:

(1) Potable water
(2) Potable water line flushing
(3) Air-conditioning condensate
(4) Discharges from emergency firefighting activities and exercises (a storm water pollution prevention plan should be prepared to address discharges or flows from firefighting only where such discharges are identified as significant sources of pollutants to waters of the United States)
(5) Uncontaminated water from crawl space, pumps, or footing drains
(6) Lawn watering
(7) Residential car and boat washing
(8) Dechlorinated swimming pool water
(9) Materials placed as part of an approved habitat restoration or bank stabilization project
(10) Rising ground waters, uncontaminated ground water infiltration, uncontaminated pumped ground water, uncontaminated springs, diverted stream flows; riparian habitats and wetlands
(11) Flows from riparian habitats and wetlands
(12) Common practices for water well disinfections
(13) Discharges within the constraints of an NPDES permit from the Tennessee Department of Environment and Conservation (TDEC)
(14) Unless otherwise prohibited by this ordinance, any discharge that could be made directly to waters of the state without a federal or state permits being required
(15) Dye testing in compliance with section 30-28(b)
(16) Other types of discharges as determined by the manager

(Ord. No. 292, § 30-109, 12-6-04)

The engineering directors for the City of Memphis and Shelby County, or their representatives, have the authority to order the above listed activities to be stopped or modified if sewage, industrial wastes, or other objectionable wastes are being discharged to the storm water system. Non-storm-water discharges, even if there are no pollutants present, may have different temperatures than the ambient stream temperature. Man-made temperature variations, whether continuous or intermittent, in a natural stream may cause loss of habitat to aquatic organisms and to vegetation.

<u>The following non-storm-water discharges are explicitly prohibited</u> by the City of Memphis and Shelby County Storm Water Ordinances. The list of prohibited discharges is not all-inclusive since any type of discharge not specifically exempted (see list of 16 items above) is prohibited by law.

(1) Trash or debris
(2) Construction materials
(3) Petroleum products including but not limited to oil, gasoline, grease, fuel oil, or hydraulic fluids
(4) Antifreeze and other automotive products
(5) Metals in either particulate or dissolved form
(6) Flammable or explosive materials
(7) Radioactive material
(8) Batteries, including but not limited to, lead acid automobile batteries, alkaline batteries, lithium batteries, or mercury batteries
(9) Acids, alkalis, or bases
(10) Paints, stains, resins, lacquers, or varnishes
(11) Degreasers and/or solvents
(12) Drain cleaners
(13) Pesticides, herbicides, or fertilizers
(14) Steam cleaning wastes
(15) Soaps, detergents, or ammonia
(16) Swimming pool backwash including chlorinated swimming pool discharge
(17) Chlorine, bromine, and other disinfectants
(18) Heated water
(19) Animal waste from commercial animal or feeder lot operations
(20) Any industrial and sanitary wastewater, including leaking sewers or connections
(21) Recreational vehicle waste
(22) Animal carcasses
(23) Food wastes
(24) Medical wastes
(25) Collected lawn clippings, leaves, branches, bark, and other fibrous materials
(26) Collected silt, sediment, or gravel
(27) Dyes, except as stated in subsection (b)
(28) Chemicals, not normally found in uncontaminated water
(29) Any hazardous material or waste, not listed above
(30) Washing of fresh concrete for cleaning and/or finishing purposes or to expose aggregates
(31) Junk motor vehicles, as defined in subsection (c)
(32) Liquid from solid waste disposal containers

Penalties for minor discharges that have no significant adverse impact on safety, health, the welfare of the environment, or the functionality of the county's storm water collection system may be waived at the discretion of the manager.

(b) Dye testing is allowed but requires verbal notification to the manager a minimum of 24 hours prior to the date of the test. The City of Memphis and Shelby County governmental agencies are exempt from this requirement.

(c) Junk motor vehicle means any vehicle that shall include by way of example but not be limited to: automobiles, construction equipment, motorcycles, and trucks that meet all of the following requirements:

(1) Is three years old or older

(2) Is extensively damaged, such damage including, but not limited to any of the following: a broken window or windshield or missing wheels, engine or transmission

(3) Is apparently inoperable

(4) Is without a valid current registration

(5) Has a fair market value equivalent only to the value of the scrap in it

(Ord. No. 292, § 30-108, 12-6-04)

General Guidelines

To ensure that the storm water system discharge contains only storm water, commercial and industrial facilities should:

- Locate all discharge points from the property. Identify where discharges lead into the municipal storm drain system or into "Waters of the State" (as defined by the blue-line streams and lakes from the U.S. Geological Survey quadrangle map). At a minimum, use construction drawings, as-built drawings, pipeline schematics, and visual observation by walking the property boundary and by examining all indoor pipes.

- Use additional methods as appropriate for locating discharge points.
  - Dye tracing
  - Inserting TV camera
  - Chemical field test kits
  - Smoke tests
  - Surface water sampling
  - Groundwater sampling
  - Isolate discharges one at a time to verify source

- Develop a plan to eliminate illicit connections.
  - Plug illicit discharge points.
  - Repair or replace discharge lines as necessary. Examine types of disposal options. Use alternative products or methods to reduce the amount of pollution.
  - Repair sewer lines or connect to sanitary sewer system. Coordinate with the sanitary sewer system operator for permission to connect to sanitary system.

- Document that non-storm-water discharges have been eliminated by recording tests performed, methods used, dates of testing, and onsite drainage points observed.

- Refer to Reference 201 for more information.

Investigation

The following lists include further information on investigation activities.

- A piping schematic or sketch will show pipes and storm water systems used to carry wastewater, cooling water, sanitary wastes, etc. Look carefully at the drawing to determine date, accuracy, and level of information. Sometimes it may be necessary to interview the field engineer or a construction worker to determine what was built.

- Visual observation of the property boundary should be conducted during daylight hours in both dry weather and wet weather. Ideally, visual observation should also include different times of the year that may affect the groundwater level and the amount of heavy vegetation.

- Visual observation of indoor pipes includes inspecting the path of floor drains in older buildings, where it is not uncommon to find cross-connections. Examine materials, condition, and repairs for each pipe as a clue to what it may carry.

- A dye test can be performed by simply releasing a non-harmful tracing dye into a sanitary or process wastewater system and examining potential discharge points into the storm water collection system for discoloration.

- TV and visual inspections can identify illicit connections to the storm drain, but further testing is usually required (dye, smoke, isolation) to identify sources.

- Smoke testing of wastewater and storm water collection systems is commonly used to detect connections between the two systems. During dry weather, a storm water collection system is filled with smoke and then traced to sources. The appearance of smoke in a waste vent pipe, sewer manhole, or even the base of a toilet indicates that there may be a connection between the sanitary and storm water systems.

Limitations

- Many facilities do not have accurate, up-to-date schematic drawings. Mistakes in construction may not be reflected in the schematics. It can be difficult to locate illicit connections especially if there is groundwater infiltration.

- The easiest method is to inspect each discharge point during dry weather. Keep in mind that flow from a storm event can continue for three days or more, and that groundwater often infiltrates the underground storm water collection system.

Related BMPs The following BMPs are closely related to this BMP:

AM-01 — Employee Training

AM-01-01 — (Table) Quick Reference for Disposal Alternatives

RH-01 — Non-Storm-Water Discharges to Storm Drains (Residential/ Home owner)

References **27, 31, 33, 34, 35, 94, 138** (see BMP Manual Chapter 10 for list)

ACTIVITY: Outdoor Loading and Unloading of Materials	IC – 02

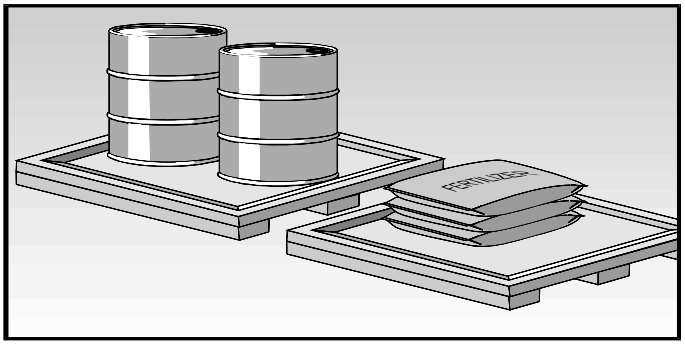

Targeted Constituents				
● Significant Benefit		◗ Partial Benefit	○ Low or Unknown Benefit	
○ Sediment	● Heavy Metals	◗ Floatable Materials	● Oxygen Demanding Substances	
● Nutrients	● Toxic Materials	● Oil & Grease	● Bacteria & Viruses	◗ Construction Wastes

Description

Prevent or reduce the discharge of pollutants to storm water from outdoor loading and unloading of materials by enclosing or covering materials, installing secondary containment, preventing contact with storm water, training, and spill prevention. This management practice will create a significant reduction in most types of pollution.

Approach

Loading and unloading of materials, commonly involving truck or rail transfer, may take place inside or outside of an enclosed area or building. Loading or unloading of materials occurs in two ways: the movement of materials in containers or direct liquid transfer. Loading and unloading of materials preferably should occur within a manufactured building so that any leaks or spills can be completely contained.

Materials spilled, leaked, or lost during loading or unloading may collect in the soil or on paved surfaces. Material may be carried away by storm water runoff, wind, or other air movement, or when the area is cleaned. Rainfall may wash pollutants from machinery used to unload or move materials. The most important factors in preventing pollution from entering storm water runoff are:

— Maintain organized and safe working conditions.
— Train employees.
— Limit exposure of material to rainfall and storm water runoff.
— Contain leaks and spills during transfer operations.
— Check and maintain equipment regularly for proper operation.

Related BMPs include:

AM-06	Material Delivery and Storage
AM-07	Spill Prevention and Control
IC-03	Outdoor Container Storage of Liquid Materials

Training

- Train employees and subcontractors on the proper material delivery and storage practices, including review of a Spills Prevention, Control, and Countermeasure (SPCC) Plan, if in effect. Make sure forklift operators are properly trained to limit spills or damaged containers, using spotters as necessary.

- Employees should periodically review material safety data sheets (MSDS). They should be aware of material content, potential hazards, and safety procedures required in the event of a spill or leak.

- Hold regular meetings to discuss and reinforce appropriate disposal procedures (incorporate into regular safety meetings). Designate a foreman or supervisor to oversee and enforce proper spill prevention and control measures.

Material Delivery Practices

- Keep an accurate, up-to-date inventory of material delivered and stored onsite. Verify that MSDS data is updated. Train employees in emergency spill cleanup procedures for dangerous materials or liquid chemicals that may be handled.

- Park tank trucks or delivery vehicles so that spills or leaks can be contained with drip pans under hoses or other secondary containment.

- Cover loading/unloading docks to reduce exposure of materials to rain. Place a seal or door skirt between trailer and building to prevent exposure to rain. Position roof downspouts to direct storm water away from loading/unloading areas.

- Look for dust or fumes during loading or unloading operations.

- When transferring material from tank trucks or rail cars into aboveground or underground storage tanks, the following procedures should be used:

  — The area where the transfer takes place should be paved, preferably with Portland cement concrete.
  — Transfer area should be designed to prevent storm water runoff from adjacent areas. Install curbs or swales uphill from transfer area.
  — Slope transfer area to a controlled drain or a dead-end sump with a positive control valve and posted instructions.
  — Place drip pans at locations where spillage may occur, such as hose connections, hose reels, and filler nozzles. Use drip pans when making and breaking connections.

- Material storage should be located away from busy areas and posted with conspicuous signs. Locate storage away from storm drains and open channels. Store materials indoors within existing structures or sheds when available. Have proper storage instructions posted at all times in an open conspicuous location.

- Minimize the amount of hazardous material inventory stored onsite. Schedule more frequent deliveries of less material.

- Do not store hazardous chemicals, drums, or bagged materials directly on the ground. Place these items on a pallet under cover with secondary containment as required. Keep hazardous chemicals in original containers that are securely shut and well-labeled. Hazardous materials should be protected from vandalism.

- Parking lots or other surfaces near bulk materials storage areas should be swept periodically to remove debris blown or washed from storage area. Install pellet traps at storm water discharge points where plastic pellets are loaded and unloaded.

- Keep ample supply of storm drain seals near drains and inlets. Maintain an adequate supply of appropriate spill cleanup material near storage areas.

Spill Cleanup

- Different materials pollute in different amounts. Make sure that each employee knows what a “significant spill” is for each material they use and what is the appropriate response for “significant” and “minor” spills. Memphis and Shelby County Storm Water Programs and the Tennessee Department of Environment and Conservation (TDEC) require immediate notification of all spills or leaks, in any amount, to the water or soil. A significant spill should be defined after review of MSDS or other documentation of the contents and proper handling procedures. Consult AM-07, Spill Prevention and Control, for general information on what constitutes a minor spill or a significant spill and Tables AM-07-1 and AM-07-2 for response and notification contact information.

- Place a stockpile of spill cleanup materials where it will be readily accessible. Train employees in spill prevention and cleanup procedures for the site. Educate employees and subcontractors on potential dangers to humans and the environment from spills and leaks.

- Clean up leaks and spills immediately using dry methods when possible. Use a rag for small spills, a damp mop for general cleanup, and absorbent material for larger spills. If the spilled material is hazardous, then the used cleanup materials are also hazardous and must be sent to either a certified laundry or disposed of as hazardous waste. Do not discharge

hazardous materials into sanitary sewer system without the sanitary sewer system authority to obtain written permission.

- Businesses, commercial facilities, and industries with at least 1,320 gallons of oil storage in 55-gallon drums or larger containers are required to have an SPCC Plan, in compliance with Title 40 of the Code of Federal Regulations, Part 1112.

Maintenance

- Inspect storage areas at least weekly if not in use and after rainfall events to be sure that storm water pollution is not being generated. Verify that designated storage areas are kept clean and well organized. Repair and replace perimeter controls, containment structures, and enclosures as needed to keep them properly functioning. The frequency of repairs may depend on the age of the facility.

- Check loading and unloading equipment regularly for leaks. Concentrate on valves, pumps, flanges, and other connections. Repair and replace parts immediately to prevent spills and leaks.

Limitations

- Ideally, most materials should be stored in climate-controlled areas away from storm water contact. Space limitation may preclude indoor storage. Storage sheds and other buildings must meet structural codes and fire codes. It may not be possible to conduct transfers only during dry weather.

References **31, 33, 34, 35, 99, 100, 103, 137, 138** (see BMP Manual Chapter 10 for list)

ACTIVITY: Outdoor Container Storage of Liquid Materials	IC – 03

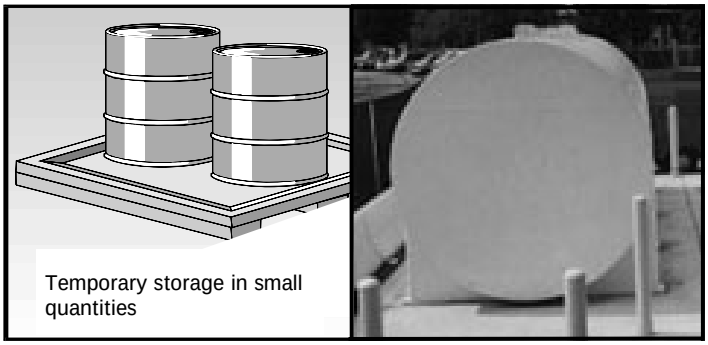

Targeted Constituents				
● Significant Benefit		● Significant Benefit	● Significant Benefit	
○ Sediment	○ Sediment	○ Sediment	○ Sediment	
● Nutrients	● Nutrients	● Nutrients	● Nutrients	● Nutrients

Description

Prevent or reduce the discharge of pollutants to storm water from outdoor container storage areas by installing safeguards against accidental releases, installing secondary containment, conducting regular inspections, and training employees in standard operating procedures and spill cleanup techniques. This management practice is likely to create a significant reduction in heavy metals, toxic materials, oil and grease, and oxygen demanding substances.

Approach

Accidental releases of materials from aboveground liquid storage tanks, drums, Dumpsters, or other containers have the potential for contaminating storm waters with many different pollutants. Materials spilled, leaked, or lost from storage containers and Dumpsters may accumulate in soils or on the surfaces and be carried away by storm water runoff.

Storage of liquid containers should preferably occur within a manufactured building so that any leaks or spills can be completely contained. In addition, a manufactured building will provide a degree of protection against natural disasters, vandalism, and other damage. It should be noted that the storage of reactive, ignitable, or flammable liquids must comply with all safety regulations and fire codes.

The most important factors in preventing pollution from entering storm water runoff are:

— Maintain organized and safe working conditions.
— Train all employees in proper methods and procedures.
— Limit exposure of material to rainfall and storm water runoff.
— Contain leaks and spills during transfer operations.
— Check and maintain equipment regularly for proper operation.

Related BMPs include:

AM-06	Material Delivery and Storage
AM-07	Spill Prevention and Control
IC-02	Outdoor Loading and Unloading of Materials

The most common causes of unintentional releases are:

- External corrosion and structural failure
- Installation problems
- Spills and overfills due to operator error
- Failure of piping systems (pipes, pumps, flanges, couplings, hoses, and valves)

Training

- Well-trained employees can reduce human errors that lead to accidental releases or spills. Operator errors can be prevented by using engineering safeguards and thus reducing accidental releases of pollutant.

- Employees should be familiar with the Spill Prevention Control, and Countermeasure (SPCC) Plan. The employee should have the tools and knowledge to begin immediately cleaning up a spill if one should occur.

- Employees should periodically review material safety data sheets (MSDS). They should be aware of material content, potential hazards, and safety procedures required in the event of a spill or leak.

- Hold regular meetings to discuss and reinforce appropriate disposal procedures (incorporate into regular safety meetings). Designate a foreman or supervisor to oversee and enforce proper spill prevention and control.

Liquid Container Management

- To limit the possibility of storm water pollution, containers used to store dangerous waste or other liquids should be kept inside a manufactured building. However, this may be impractical due to site constraints. Small inexpensive storage buildings can often be used when a permanent building is not feasible. Service bays, shacks, or even doghouses are also alternatives to be considered, provided that safety and fire codes are not violated.

- Protect outdoor liquid containers from rainfall and storm water runoff with the following measures:
  - Cover storage area with a roof.
  - Minimize storm water runoff by enclosing area with a berm or ditch.
  - Use covered Dumpsters to store liquid containers.

- Storage of any threshold quantity of oil or hazardous materials must meet specific federal and state standards that include, as a minimum:
  - SPCC Plan
  - Secondary containment
  - Leak-detection monitoring and inspections
  - Emergency preparedness plans

- Safeguard against accidental releases by using the following equipment:
  - Overflow protection devices to warn operator
  - Automatic shutdown transfer pumps
  - Guard posts/bollards around tanks and piping to prevent vehicle or forklift damage
  - Clearly labeled tags and other identifiers, including color coding
  - Restricting access to valves

- Large storage tanks, piping systems, and other types of storage systems must be inspected regularly by specially trained professionals, such as a registered structural or mechanical engineer. An engineer can identify and correct potential problems such as loose fittings, poor welding, and improper gaskets. Tank foundations, connections, and coatings should also be inspected. Document all inspections, including photographs when appropriate.

- Regular inspection for corrosion, leaks, cracks, or other physical damage may require that the tank or piping system be emptied. Closely observe structural reactions during filling and unfilling of tanks and piping systems in order to verify integrity; this is usually the time of greatest stress for a system.

Secondary Containment

- Some common measures that are used for secondary containment include berms, dikes, vaults, double-walled tanks, and Dumpsters. Some secondary containment structures need to be designed by a professional engineer with experience and training. The hydrostatic pressure of a few feet of water or other liquids can be very heavy.

- Secondary containment structures must be made of materials that will not react or degrade with the liquids in storage. Strong acids or bases may react with metal containers, concrete, and some plastics. Some organic chemicals may need certain special liners for dikes. Earthen dikes are strongly discouraged but may be okay for some applications. A variety of coatings is available for tanks or dikes.

- Secondary containment measures will generally require a positive means of control, such as a clearly labeled valve or plug, to prevent the release of storm water contaminated by spills or leaks.

- Secondary containment structures should provide at least 10% of the volume of all of the containers or 110% of the volume of the largest container, whichever is greater. Secondary containment structures that allow access for a truck or railcar may need to consider the truck or railcar to be the largest container.

- Secondary containment structures open to the weather must provide an additional allowance for rainfall (freeboard). Recent U.S. Environmental Protection Agency guidance suggest that the volume that corresponds to a 25-year, 24-hour storm (6.5 inches of rainfall in the Memphis area) should be used; however it is not a regulatory requirement.

- Containment dikes may consist of berms, curbs, retaining walls, or manufactured walls that are designed to hold spills. Dikes are an effective pollution prevention measure for aboveground storage tanks, provided that an effective plan for managing storm water is in place. Dikes must be inspected daily and there must be clearly designated responsibilities for releasing storm water. Sampling of storm water may be required prior to its release from a diked area.

- For small volumes of storage, the least expensive form of dikes is probably curbing. Curbing is commonly used beneath piping systems that contain small-diameter pipes. Curbing can redirect contaminated storm water away from the storage area. Common curbing materials are asphalt, concrete, synthetic materials, metal, or other impenetrable materials. Inspection and maintenance should be conducted frequently on curbing, as vehicles and equipment can easily damage curbing so as to reduce the impounded storage volume.

- Dumpsters may be used as secondary containment, provided that they are properly labeled and are in good condition and without corrosion or leaky seams. All drain valves should be closed. Do not allow garbage to be placed into secondary containment Dumpsters. Do not use garbage Dumpsters as a temporary place for secondary containment.

- Facilities with “spill ponds” designed to intercept, treat, or divert spills should contact the Tennessee Department of Environment and Conservation (TDEC) regarding environmental compliance. Spill ponds are not currently an environmentally acceptable means of ensuring secondary containment.

Spill Cleanup

- The City of Memphis and Shelby County engineering departments and the Tennessee Department of Environment and Conservation (TDEC) require immediate notification of all spills or leaks, in any amount, to the water or soil.

- Different amounts of spilled material may require different levels of response. Make sure that each employee knows what a "significant spill" is for each material they use, and what the appropriate response is for "significant" and "minor" spills. A significant spill should be defined after review of MSDS or other descriptive documentation that presents the contents and proper handling procedures. Consult AM-07, Spill Prevention and Control, for general information on what constitutes a minor spill or a significant spill.

- Place a stockpile of spill cleanup materials where it will be readily accessible. Train employees in spill prevention and cleanup procedures for the site. Educate employees and subcontractors on potential dangers to humans and the environment from spills and leaks.

- Clean up leaks and spills immediately using dry methods when possible. Use a rag for small spills, a damp mop for general cleanup, and absorbent material for larger spills. If the spilled material is hazardous, then used cleanup materials are also hazardous and must be sent to either a certified laundry or disposed as hazardous waste. Do not discharge hazardous materials into sanitary sewer system without contacting the sanitary sewer authority and receiving written permission.

- Many businesses, commercial facilities and industries are required to have an SPCC Plan. The SPCC Plan must have procedures for specific chemicals that are frequently used. The SPCC Plan must contain emergency contact numbers in addition to telephone numbers for emergency response organizations and regulatory agencies.

Maintenance

- Inspect storage areas at least weekly and during rainfall events to be sure that storm water pollution is not being generated. Verify that designated storage areas are kept clean and well organized. Verify that dikes and curbing maintain the ability to retain storm water.

- Repair and replace perimeter controls, containment structures, and enclosures as needed to keep them properly functioning. The frequency of repairs may depend on the age of the facility.

- Conduct routine weekly inspections that include the following items:
  - External corrosion and structural failure
  - Evidence of spills and overfills due to operator error
  - Piping system (pipes, pumps, flanges, coupling, hoses, and valves)
  - Loose fittings and improper or poorly fitted gaskets
  - Tank foundations, connections, and coatings

Limitations

- Space limitations or site constraints may preclude indoor storage.
- Storage sheds must meet building & fire code requirements.
- Costs may be prohibitive when covering a large loading/unloading area.

References **31, 33, 34, 35, 98, 99, 103, 138** (see BMP Manual Chapter 10 for list)

ACTIVITY: Outdoor Process Equipment Operations	IC – 04

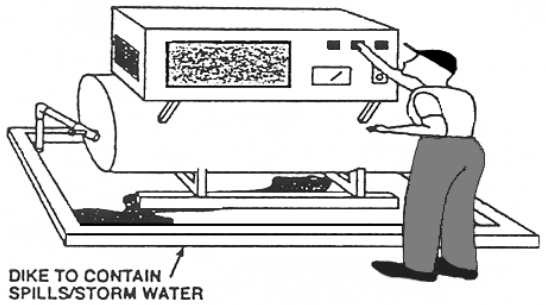

Targeted Constituents				
● Significant Benefit		● Significant Benefit	● Significant Benefit	
○ Sediment	○ Sediment	○ Sediment	○ Sediment	
● Nutrients	● Nutrients	● Nutrients	● Nutrients	● Nutrients

Description

Prevent or reduce the discharge of pollutants to storm water from outdoor process equipment operations and maintenance by reducing the amount of waste created, enclosing or covering all or some of the equipment, installing secondary containment, and training employees. This management practice is likely to create significant reductions in sediment, heavy metals, toxic materials, and oil and grease.

Approach

Outside process equipment operations can contaminate storm water runoff. Activities such as rock grinding or crushing, painting, coating, grinding, sanding, degreasing or parts cleaning, landfills, wastewater, solid waste treatment and disposal, and lumber mills are examples of process operations that use hazardous materials that could cause contamination of storm water runoff. To explain one example in detail, pollutants from wastewater treatment and disposal areas may be generated by pumping stations, storage of chemicals, addition of treatment chemicals, solids dewatering and land application, emergency generators, and discharge of treated wastewater.

Waste spilled, leaked, or lost from outdoor process equipment operations may build up in soils or on other surfaces and be carried away by storm water runoff. There may also be a potential for liquid waste from lagoons or impoundments to overflow into surface waters or contaminate soil and groundwater.

An industry that generates large volumes of process wastewater will typically have an onsite treatment system that discharges directly to the nearest receiving water. A National Pollutant Discharge Elimination System (NPDES) permit must be obtained from the Tennessee Department of Environment and Conservation (TDEC) for most industries (see TDEC Web site for additional information). Alternatively, the industry may discharge to the municipal wastewater collection system with permission from the wastewater system operator. In most areas within Memphis and Shelby County, this entity is the City of Memphis, which may require pretreatment,

depending on the pollutant loading. The city also has to meet requirements for NPDES permitting and may require monitoring and sampling programs.

The preferred (and the most economical) action to reduce storm water pollution is to alter the nature of each activity such that pollutants are not exposed to storm water. This often means performing the activity during dry periods only or substituting benign materials for more toxic ones.

General Guidelines

- Design each activity to prevent exposure of pollutants to storm water. It is preferable to move activities with potential for pollution indoors or cover with a permanent roof.

- Minimize contact of storm water runoff with outside manufacturing operations through curbs, berms, and swales.

- Connect drains in the process equipment area to the public sanitary sewer or to the facility wastewater treatment system. Curbs (for secondary containment) are usually placed around the immediate boundaries of the process equipment.

- Regularly inspect and clean the storm water drainage system. Additional BMPs may be required for storm water treatment prior to allowing storm water runoff to leave the site. For example, consider the use of catch basin filtration inserts (see ST-06, Water Quality Inlets and Media Filtration Inlets) as a means to capture particulate pollutants that are not likely to dissolve in water. Oil-water separators (see ST-07) are necessary for many types of industries and commercial facilities.

- Reducing the amount of waste that is created and consequently the amount that must be stored or treated is another way to reduce the potential for storm water contamination from outside manufacturing activities.

Considerations for Connecting to Sanitary Sewer System

If storm water runoff becomes polluted, is used in a mechanical process, or as a cooling or cleaning solution, then it must be captured and treated. The preferred option is to treat wastewater onsite. If there is not an onsite process wastewater treatment system, consider discharging to the public sanitary sewer system. Any connections to the sanitary sewer system must be approved by the wastewater system operator. The following conditions may receive favorable consideration from the city for such a connection:

- If a surge tank is used to limit discharge to the sanitary sewer system to acceptable levels of minimal flows.

- If a bypass control valve is installed to route clean storm water away from sanitary sewer into the storm drainage system.

Maintenance

- Routine inspections and preventive maintenance should be performed daily on all outdoor process equipment areas. Check process equipment for leaks and spills, particularly at valves, flanges, seams and welds, gaskets, and other connections.

Limitations

- Providing an enclosed structure or permanent roof may be very expensive for processes with large volumes of material.
- Storage sheds must meet building code and fire code requirements.

References **21, 33, 99, 103, 138** (see BMP Manual Chapter 10 for list)

ACTIVITY: Grounds Construction and Maintenance	IC – 05

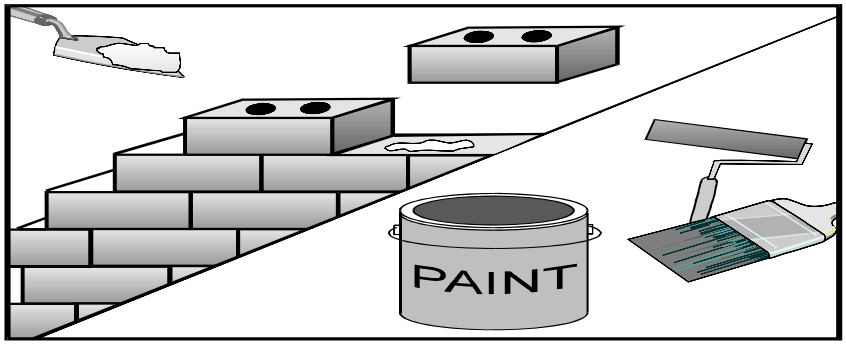

Targeted Constituents				
● Significant Benefit		● Significant Benefit	● Significant Benefit	
○ Sediment	○ Sediment	○ Sediment	○ Sediment	
● Nutrients	● Nutrients	● Nutrients	● Nutrients	● Nutrients

Description

Prevent or reduce the discharge of pollutants to storm water from grounds construction and maintenance by using soil erosion controls, enclosing or covering building material storage areas, using good housekeeping practices, using safer alternative products, training employees, washing and cleaning up with as little water as possible, preventing and cleaning up spills immediately, keeping debris from entering the storm drains, and maintaining the storm water collection system.

Approach

This BMP is intended for minor construction only; larger construction projects should be analyzed using a much larger checklist of potential pollution sources. Modifications are a common occurrence at all types of industrial and commercial facilities. There may be maintenance personnel or even an entire maintenance crew at large industrial sites. The activity may vary from landscaping maintenance to minor building repairs or from major remodeling to the installation of new facilities on currently open space.

Construction and maintenance activities can generate pollutants that can reach storm water if proper care is not taken. Common types of contaminants may be pesticides, herbicides, fertilizers, solvents, paints, and varnish removers, finishing residues, spent thinners, soap cleaners, kerosene, asphalt and concrete materials, adhesive residues, and old asbestos installation.

Related BMPs include:

- AM-01 Employee Training
- AM-08 Waste Management and Recycling
- AM-13 Pesticides, Herbicides, and Fertilizer Use
- AM-19 Structure Construction and Painting

Training

- Educate employees who are doing the work about the importance of keeping pollutants out of the storm water system including review of the Spill Prevention, Control, and Countermeasure (SPCC) Plan.

- Make material safety data sheets (MSDS) available to all employees and review in periodic safety training.

- Inform subcontractors, such as garbage collection or material delivery, of company policy on these matters and include appropriate provisions in their contract to make certain proper housekeeping and disposal practices are implemented.

Good Housekeeping

- Keep the work site clean and orderly. Remove debris in a timely fashion and sweep the area. Properly dispose of wash water, sweepings, and sediment.

- Store materials to prevent contact with rainfall and storm water runoff.

- Make sure that nearby storm drains are well marked, either with a color code or a painted stencil, to minimize the chance of inadvertent disposal of residual paints and other liquids.

- Use soil erosion control techniques wherever bare ground is temporarily exposed. See BMPs relating to erosion and sediment to select best methods and procedures.

- Use the entire product before disposing of the container.

- For a quick reference on disposal alternatives for specific wastes see AM-01-1 presented in employee training BMP fact sheet. Dispose of any paint, thinners, residue, and sludges that cannot be recycled as hazardous waste.

- Latex paint and paint cans, used brushes, rags, absorbent materials, and drop cloths, when thoroughly dry and no longer hazardous, may be disposed of with other construction debris.

- Recycle residual paints, solvents, lumber, and other materials to the maximum extent practical. Buy recycled products to the maximum extent practical.

- Inform employees and subcontractors of acceptable housekeeping, disposal, and other storm water management practices and include

appropriate provisions in subcontracts to make certain proper housekeeping disposal and other storm water management practices are implemented.

- Do not remove original product labels from containers. Product labels contain important safety and disposal information.

Landscaping

- Landscape maintenance involves the use of pesticides and fertilizers. Proper use of these materials in the correct amounts will reduce the risk of storm water pollution. In particular, do not apply these materials immediately prior to or during rainfall. When irrigating landscaped areas, avoid using too much water so that excess nutrients and herbicides do not wash away. Efficient use of nutrients and pesticides can save a great deal of money and will help preserve the natural streams and lakes.

- It is important to properly store pesticides and application equipment and to dispose of the used containers in a responsible manner. Personnel who apply fertilizers and pesticides should be trained in their use. Integrated pest management can be used to reduce use of pesticides.

- Keep as much wooded area as possible. Natural wooded areas require very little maintenance and generate no storm water pollutants. The next best option is to plant native vegetation and trees in order to reduce water, fertilizer, and pesticide needs.

- Collect and dispose of grass clippings that may enter the storm drainage system or into natural streams.

Painting

- Painting operations should be properly enclosed or covered to avoid drift, typically by handing drop cloths or sheets from temporary scaffolding. Use paint application equipment that minimizes overspray. If painting requires scraping or sand blasting of the existing surface, use a ground cloth to collect the chips. If the paint chips contain lead or tributyl tin, they are considered hazardous waste.

- Mix paint indoors before using so that any spill will not be exposed to rain. Do so even during dry weather because cleanup of a spill will never be 100% effective. Dried paint will erode from a surface and be washed away.

- If using a small amount of water-based paints, clean the application equipment in a sink that is connected to the sanitary sewer. Properly store leftover paints if they are to be kept for the next job or properly

dispose of the leftover paints. For oil-based paints, paint out brushes to the extent practical, and then filter and reuse thinners. Oil-based paints must not be disposed into the sanitary sewer. Never clean paintbrushes or rinse paint containers into a street, gutter, storm drain, or watercourse.

- When using sealants on wood, pavement, roofs, etc., quickly clean up spills. Remove excess liquid with absorbent material or rags.

Building Maintenance

- Collect and properly dispose of roofing debris prior to rainfall and upon completion of work to prevent entry of debris and materials into gutter downspouts.

- When small particles have accumulated in the roof gutter, either sweep out the gutter or wash the gutter and trap the particles at the outlet of the downspout. A sock or geofabric, which can be securely fastened over the outlet, may effectively trap the materials.

- Larger buildings may have the downspouts connected directly to an underground header or a storm drain. In this case, place a temporary plug at the first convenient point in the storm drain. Wash the gutters and downspouts, then pump out the wash water with a vacuum truck. Clean the catch basin sump where the plug had been placed.

Parking Area Maintenance

- Storm water runoff from parking lots and roads may contain undesirable concentrations of oil, grease, suspended particulates, and metals such as copper, lead, cadmium, and zinc, as well as the petroleum by-products of engine combustion. Deposition of air particulates, generated by the facility or by adjacent industries, may contribute significant amounts of pollutants.

- An appropriate method for removing pollutants from parking areas is to conduct periodic sweeping. A vacuum sweeper is a better method of sweeping than mechanical brush sweeping. The mechanical brush sweeper is not as effective at removing the fine particulates.

- Some form of storm water treatment may be necessary to reduce pollutants from sizable parking lots. An oil-water separator (ST-07) is highly recommended for most parking lots. Filter strips and swales (ST-05) will reduce the amount of pollutants by using vegetation and permeable soils. If some employees have cars that are leaking visible amounts of engine fluids, encourage them to have the problem corrected.

Storm Drain Maintenance

- Catch basins and storm drain pipes generally need to be cleaned every six to 12 months. If the storm drain lines have a flat gradient, typically less than 1%, more frequent inspection and cleaning will be necessary.

- Install skimmers, "turn-down" elbows, or similar devices on outlets of the catch basins. These are very inexpensive measures to help retain floatable materials, oil, and grease.

- If a vacuum truck is used to clean the storm drainage system, dirty water will be generated. The wash water should not be discharged to the storm drainage system. Disposal options include: 1) an onsite process wastewater system, 2) sanitary sewer system, if permission is granted by the city, or 3) an onsite sediment basin or other form of storm water treatment. Do not discharge to an onsite sediment basin prior to or during a rainfall event; allow wash water to infiltrate into the ground or to evaporate.

Maintenance

- Inspect the work zone daily to ensure that good housekeeping practices are being followed. Spot-check employees and subcontractors regularly (typically monthly) to ensure appropriate practices are being employed.

Limitations

- Alternative pest or weed controls may not be available, suitable, or effective in every case. Safer alternative building and construction products may not be available or suitable in every instance.

- Hazardous substances that cannot be used or recycled must be disposed of and handled by a licensed hazardous waste hauler.

References **33, 99** (see BMP Manual Chapter 10 for list)

ACTIVITY: Over-Water Operations	IC – 06

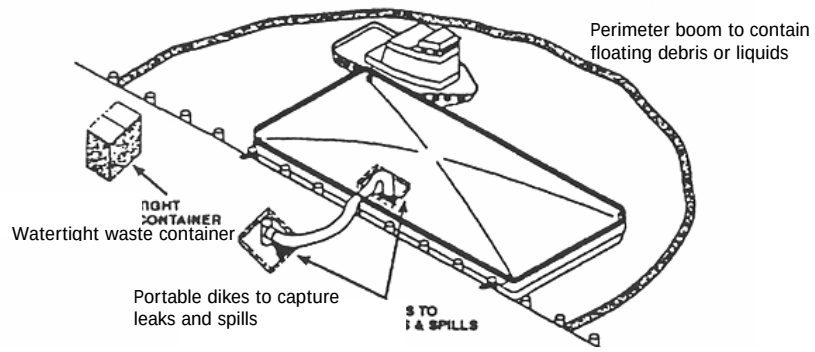

Targeted Constituents

● Significant Benefit ◗ Partial Benefit ○ Low or Unknown Benefit

◗ Sediment	◗ Heavy Metals	○ Floatable Materials	◗ Oxygen Demanding Substances	
◗ Nutrients	◗ Toxic Materials	○ Oil & Grease	○ Bacteria & Viruses	○ Construction Wastes

Description

Prevent or reduce the discharge of pollutants to storm water and receiving waters from over-water activities by minimizing repairs and maintenance, proper disposal of wastes, cleaning up spills and wastes immediately, training and educating employees and visitors, and structural improvements.

Suitable Applications

Over-water industries include channel dredging or the use of some natural resource within a stream, river, or lake. Commercial activities in or near rivers and lakes involve boat and ship repair yards, marinas and boat docks, tourist boats and cruises, and restaurants or other businesses on a dock or pier.

Over-water industries must be permitted by Tennessee Department of Environment and Conservation (TDEC) in order to operate within "waters of the state," defined as any blue-line stream on the U.S. Geological Survey quadrangle map. Typical measures include the use of silt curtains, floating booms, specialized material handling equipment, filter boxes, cofferdams, and dikes. The methods and approach must carefully consider currents, volume of flow, velocity, types of sediment, aquatic life and distribution, etc. Operations must be continuously monitored to prevent pollution from being generated. Consult TDEC for additional requirements and permit application process.

Activities of concern for marine activities include chipping and painting of hulls, on board maintenance of engines, and the disposal of domestic wastewater and ballast water. With few exceptions, BMPs to protect water quality are common-sense and low-cost changes to normal day-to-day procedures.

Commercial facilities and restaurants that are located on a boat or a dock are subject to the same pollution requirements as outlined elsewhere in the BMP Manual. Utility connections are problematic and need special design solutions. Related BMPs include:

AM-06	Material Delivery and Storage
AM-08	Waste Management and Recycling
AM-09	Sanitary and Septic Waste Management
IC-07	Food Service and Handling
RH-11	Boating and Marinas

Approach

Fish Waste

Fish waste is defined as the by-product of cleaning fresh-caught fish. Fish waste must be managed properly. Recycling small amounts of fish waste caught for personal use back into the water is encouraged when disposal will not result in water quality or public nuisance problems, such as wastes washing up on shore and causing odor or bacteria problems. Fish wastes should not be recycled in any dead-end lagoons or other poorly flushed areas.

Marina owners should generally provide fish cleaning stations where waste recycling can occur without adversely affecting water quality. People participating in fishing tournaments and other authorized events should follow the guidelines presented by the sponsors. Follow all rules and regulations that are issued by the Tennessee Wildlife Resources Agency or the U.S. Coast Guard (Mississippi River).

Restaurants are specifically prohibited from discharging fish wastes into a storm water conveyance or a natural body of water.

Marine Activities

- Properly dispose of domestic and sanitary wastewater by using holding tanks. Empty holding tanks at approved wastewater collection facilities at marinas and boatyards. Verify ballast water is clean before discharging to natural body of water.

- Limit over-water hull surface maintenance to minor sanding and minor painting using hand tools and a small can of paint or other surface agent. In general, conduct most boat repair and maintenance items by removing the boat from the water into an organized maintenance area.

- Use phosphate-free and biodegradable detergents for hull washing. Limit the amount of detergents used by first scrubbing and cleaning with water.

- Use secondary containment on paint cans. Have available spill containment and cleanup materials. Use tarps, ground cloths, or plastic sheeting when sandblasting or painting boats on land. Spray applicators may be used when painting on land.

- Properly dispose of surface chips, used blasting sand, residual paints, and other materials. Use temporary storage containment that is not exposed to rain. Sweep dry docks each day or after maintenance is completed.

- Boats with inboard engines should have oil absorption pads in bilge areas. The pads should be changed at least once a year or as needed.

- Automotive fuel, fluids, and oil should be kept in secure containers. Recycle used oil in properly labeled containers. Inspect and repair engine valves, pipes, and hoses as necessary. Use drip pans when conducting maintenance and repair.

- Immediately clean up spills on docks or boats using absorbent materials. Keep ample supply of spill cleanup materials on hand and conspicuously marked. Dispose of cleanup materials properly.

- Clean catch basins and the storm drains at regular intervals. Post signs to indicate proper use and disposal of residual paints, rags, used oil, and other engine fluids.

- Educate visitors and employees on spill prevention and cleanup. Include appropriate language in tenant and user contracts that indicates the tenant's responsibility to guard against spills, properly dispose waste materials, and limit practices that may pollute storm water.

- Painting should be limited to spot work. In marinas, tenant maintenance over water should be limited to work requiring the opening of no more than a pint-size paint can. Paint mixing should not occur on the dock.

- Marinas must provide wastewater disposal facilities onsite or close by. Wastewater facilities typically consist of either dockside lines or a pump-out station. Marinas should post signs at the entrance and through the facility indicating maintenance rules and reminders.

Limitations

- Private tenants at marinas may resist restrictions on shipboard painting and maintenance. Existing contracts with tenants should be updated to require that tenants abide by new rules that benefit water quality.

- Even small amounts of biodegradable cleaning agents have been found to be toxic to fish. Disposal of small amounts of cleaning agents should be done through the sanitary sewer system.

References **33, 95, 135, 192** (see BMP Manual Chapter 10 for list)

ACTIVITY: Food Service and Handling	IC – 07

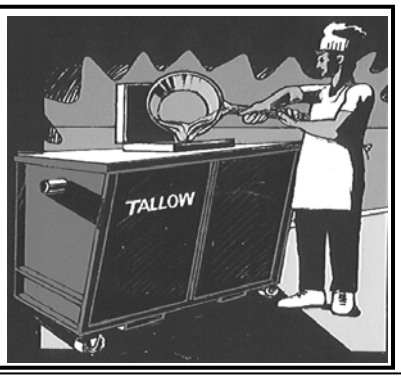

Targeted Constituents

● Significant Benefit ◗ Partial Benefit ○ Low or Unknown Benefit

○ Sediment	○ Heavy Metals	● Floatable Materials	◗ Oxygen Demanding Substances	
◗ Nutrients	◗ Toxic Materials	● Oil & Grease	● Bacteria & Viruses	○ Construction Wastes

Description

Prevent or reduce the discharge of pollutants to storm drainage systems and to natural streams from businesses or industries that deal with food or food by-products. Food and food by-products damage natural streams by promoting harmful pathogens and depleting the dissolved oxygen.

Approach

There are many types of commercial and industrial establishments that are involved in the processing and handling of food. Some common examples are restaurants, grocery stores, convenience stores, fruit stands, meat packing plants, bakeries, etc. Due to the shear number of establishments that concern food, this BMP has the potential to make a huge impact on storm water quality. Effective employee training is essential.

Memphis and Shelby County have separate sanitary sewer systems and storm drainage systems. Storm drains located outdoors are intended to channel rainwater runoff directly to the nearest stream to prevent ponding and flooding. Anything that leaks or is washed into the storm drainage system goes untreated into natural streams.

Illegal Discharges or Dumping

Disposal of food or food by-products into the storm drainage system or natural streams is a direct violation of the Memphis and Shelby County Storm Water Ordinances. Refer to IC-01, Non-Storm-Water Discharges to Storm Drains. Report illegal dumping into the storm drains or local waterways to the Storm Water Hotlines at 576-6721 for City of Memphis and 545-3870 for Shelby County. The Memphis and Shelby County Health Department (MSCHD) regulators can be reached at 544-7776

It is a common misperception that disposal of food and food by-products into the storm drainage system is not a problem because these products are generally considered to be biodegradable. This assumption is wrong because contaminated or spoiled food is an extreme danger to both humans and animals. Harmful bacteria and viruses can pollute natural streams and

creeks, making humans and animals sick. Decaying food uses dissolved oxygen in natural streams, depleting oxygen levels and causing fish kills. Food contributes to nutrients in downstream rivers and lakes, which can lead to excessive aquatic vegetation, eutrophication, and other environmental problems.

Illicit Connections

Many restaurants and other smaller businesses may not know whether a particular drain leads to the storm drain system or the sanitary sewer system. Contact the property owner for plans indicating which pipes are connected to storm drains and which to the sanitary sewer. If plans are not available, then contact the City of Memphis sanitary sewer authority for assistance. The MSCHD also offers assistance at 544-7776.

All drains inside of a building or under a covered structure must be connected to the sanitary sewer. All drains outside a building and exposed to rainfall should be connected to the storm drain system. This common-sense approach was not generally in effect for older buildings and neighborhoods, so it is important to verify that each pipe connects to the proper drain. Even newer buildings may not be configured in the correct way, due to shortcuts or assumptions on the behalf of a building contractor. Smoke testing or dye tracing can be used to identify sanitary sewer lines.

Methods

Dumpsters

Dumpsters are a major source of storm water pollution throughout the Memphis and Shelby County. As a result, city inspectors are often called to investigate leaking Dumpsters. Restaurants, grocery stores, and other businesses that deal with food handling and services must take extra care in dealing with waste and Dumpsters due to the potential for rodents, insects, other animals, diseases, etc. Restaurants, grocery stores, and other food handling businesses must include regular Dumpster inspection and maintenance as part of the daily checklists. See IC-10, Dumpsters, for additional information and guidelines on using and maintaining Dumpsters. New facilities should include special curbed areas to reduce storm water pollution.

- Locate the Dumpster away from storm drainage inlets and channels. In addition to being accessible for the Dumpster waste contractor trucks, the Dumpster must be easily accessible to employees. Consider placing the Dumpster in a shaded area. New Dumpster pads should incorporate curbed/diked areas to redirect storm water.

- Keep loading areas and surrounding parking lot clean. Pick up trash and litter as needed (at least daily). Sweep areas clean using a broom and dustpan; do not use a pressure washer or a leaf blower to collect litter.

- Never place leaky bags or liquid waste into the Dumpster. Drain liquids into an indoor drain that leads to the sanitary sewer system. Use a dry method, such as absorbents or kitty litter, to absorb liquid wastes and spills. Sweep up promptly.

- Keep Dumpster lids and hatches closed to keep out rainwater. Insist on a fully functional Dumpster with adequate lids and doors. Verify that the drain plug at the bottom of a Dumpster is securely in place to prevent discharges. Call the Dumpster leasing company to replace faulty equipment or fittings.

- Keep Dumpster secured to prevent illegal dumping. A lockable enclosure may be needed if the Dumpster is not behind a secured fence or otherwise protected.

- Do not put used fats, oils, and grease into a Dumpster. These substances never wash away completely; the Dumpster will become a source of odors, disease vectors, and storm water pollution.

Fats, Oils, and Grease

Fats, oils, and grease are destructive to natural creeks and streams, and should not be discharged onto the ground or any surface that drains toward the storm drainage system, ditches, swales, or culverts.

Fats, oils, and grease are also very harmful to the sanitary sewer system. The City of Memphis and Shelby County closely regulate any business or establishment with the potential to generate large amounts of grease. When grease is washed into a sanitary sewer drain, it is likely to congeal on the cool internal surfaces of sanitary sewer lines. Eventually a grease blockage will occur; the sewage may back up into a business or residence. Manholes and laterals may need to be cleaned out; however, the problem will recur unless the problem source is located and then eliminated. The use of solvents, detergents, and enzymes does not eliminate the problem of clogging grease. Grease and oils may congeal farther down the line, particularly as the temperature decreases downstream.

The Tennessee Department of Environment and Conservation (TDEC) has published a useful report titled “Tennessee Oil and Grease Control Guidance Document” (reference 197). Topics include: food disposal, grease traps, grease interceptors, grease recycling, garbage grinders, sewage blockages, definitions, etc.

Section 33-112 of the City of Memphis, Division of Public Works Sewer Use Ordinance (revised in 2005) details the requirements for food establishments

regarding this issue. Source control and field inspection programs are important to reduce grease impacts. Property owners should document inspections and maintenance, and ensure that grease pumping and disposal is performed by authorized haulers using waste manifest certifications.

The following general guidelines are recommended:

- Train employees to handle fats, oils, and grease correctly. Include written materials as well as verbal training. Post signs at grease disposal locations in order to encourage proper disposal.

- Minimize the use of fats, oils, and grease in the cooking process. If possible, use grease and oil multiple times when cooking similar foods to reduce the amount generated.

- When possible, recycle used grease and oils in a special container. Do not pour grease and oils into a Dumpster, or dispose outside on surfaces that drain to city storm water drainage systems or to natural creeks.

- Clean grease traps, grease interceptors, and similar equipment frequently in order to prevent sanitary sewer system backups. Follow city and county requirements for inspections, maintenance, and documentation.

Food Storage

Some businesses, such as fast-food restaurants and fruit stands, keep food products in sheds or outside in containers. Storage of food is closely regulated by local and state officials. In addition, storage of flammable materials and hazardous materials must comply with local building and fire codes. The following guidelines outline the basic points of preventing food or food by-products from contaminating storm water runoff:

— Keep storage away from exposure to rainfall and weather. Locate storage in an area where leaks and spills will not reach storm drain.

— Maintain storage containers in good condition. Use original containers if possible. Properly label all storage containers.

Cleaning Procedures

A major source of pollution from restaurants and grocery stores stems for the cleaning and scrubbing of indoor equipment (such as pots, pans, grills, cooking hoods, etc) outside in the parking lot. Restaurants, grocery stores, and all facilities that deal with food must have an indoor area with a floor drain connected to the sanitary sewer system, specifically for the purpose of cleaning equipment and supplies.

- Verify that the requirements and guidelines of IC-11, Kitchen Exhaust Cleaning, are being followed for grease removal from ventilation systems.

- Clean floor mats, air filters, air vents, hoods, meat trays, garbage cans, and other equipment indoors in a mop sink or near a floor drain connected to the sanitary sewer system. Do not dump hazardous waste liquids down the storm drain.

- Buy the least-toxic cleaning products available; look for the words "non-toxic," "free of ammonia, phosphates, dye or perfumes," or "biodegradable." Avoid products containing chlorinated compounds, petroleum-based substances, phenols, and formaldehyde. Use environmentally friendly products whenever possible.

- Do not allow oil and grease to spill onto the ground during transport to the proper grease disposal bin.

- Recycle food containers wherever possible, such as paper, cardboard, plastic, or metal. Clean food containers thoroughly before placing in a recycling container.

Response to Spills and Leaks

Pollution prevention plans are recommended that include cleanup procedures for different types of spills, schedule of employee training, and cleanup materials that are properly labeled and in an easily accessible area. Post the pollution prevention plan in a central area and discuss with employees as needed.

- — Report any discharges to the City of Memphis Storm Water Hotline at 576-6721 and the Shelby County Storm Water Hotline at 545-3870 as soon as possible.
- — Use dry methods for cleanup (absorbent rags or granular materials such as kitty litter). Sweep up and dispose of absorbent in the proper trash receptacle.
- — Protect storm drains with special covers or berms as necessary. Never wash any spilled material into the municipal storm drain system.

Maintenance

- Inspection and maintenance of Dumpsters should occur on a daily basis.

- Storm drain berms and covers should be inspected regularly for necessary repair and replacement.

- Catch basins, detention facilities, or drainage structures need to be maintained and periodically cleaned out, particularly after significant rainfall events.

Related BMPs

The following list of BMPs are also helpful for kitchens, restaurants, food handling services, and businesses:

AM-01	Employee Training
IC-01	Non-Storm-Water Discharges to Storm Drain
IC-08	Power or Pressure Washing
IC-10	Dumpsters
IC-11	Kitchen Exhaust Cleaning

Limitations

- Some restaurants or convenience stores may have space limitations that hamper efforts to clean equipment indoors. Structural or plumbing modifications may be necessary to create an indoor cleaning area with sanitary sewer connections.

References

31, 33, 34, 35, 99, 103, 138, 193, 197 (see BMP Manual Chapter 10 for list)

ACTIVITY: Power or Pressure Washing	IC – 08

Power Washing
Pressure Washing
Steam Cleaning

Capture & Recycle

Targeted Constituents

○ Significant Benefit ◗ Partial Benefit ○ Low or Unknown Benefit

Sediment	Heavy Metals	○ Floatable Materials	◗ Oxygen Demanding Substances	
◗ Nutrients	● Toxic Materials	● Oil & Grease	○ Bacteria & Viruses	○ Construction Wastes

Description

The purpose of this BMP is to reduce pollution impacts from power washing, pressure washing, and steam cleaning of buildings, roofs, fences, floors, driveways, parking lots, etc. These practices dislodge pollutants such as grease, oil, paint chips, sediments, and food particles through the use of high-pressure water sprays, water containing a cleaning solution, or by heated water. Prevent or reduce the discharge of pollutants from power washing activities to storm water by: employee training and education, identification of alternatives, and control of wash water.

Approach

Pollution from these types of washing activities comes from two sources:

- Cleaning solutions
- Pollutants and dislodged materials

Cleaning solutions generally contain chemicals that are able to dissolve and dislodge grease and oils. These cleaning solutions are very dangerous to aquatic life and are likely to cause fish kills. It should be noted that all soaps, even biodegradable soaps, are harmful to fish and other aquatic organisms.

Pollutants and dislodged materials will also pollute the aquatic environment and harm fish. Materials such as paint chips or automotive fluid leaks are toxic to all creatures.

Alternatives to Power or Pressure Washing

The primary approach for most applications is to avoid the need for power washing, pressure washing, or steam cleaning by using other methods such as:

- Dry methods for cleanup of liquid wastes and dry materials
- Scrapers for removing mud, dirt, or old paint
- Nonpressurized water in small amounts and preventing its discharge to storm drain

Dry methods for cleanup of liquid wastes include the use of absorbents and dry rags to contain the liquid. Then the area can be cleaned with a small amount of water using a mop or a scrub brush. Small amounts of wash water can generally be discharged to the sanitary sewer system if it does not contain hazardous chemicals or toxic materials.

Scrapers should be used for removing old paint from buildings or moss from rooftops. If the old paint contains lead or tributyl tin, then it is considered a hazardous waste and must be disposed at a facility licensed to handle hazardous waste. Use tarps and ground cloths to collect paint chips, and then carefully verify that there are no paint chips on the ground or other surfaces prior to washing.

Squeegees may be appropriate for cleaning mud or dirt from some surfaces. Scrubbing with sponges or rags will ensure that the surface is cleaned with the correct amount of pressure.

Manage wash water appropriately. Use sandbags, portable berms, or other means to direct the wash water so it flows to one of the following:

- a grassy or vegetated area (if there are no oil or hazardous materials)
- a catch basin with an insert to filter out pollutant
- a sump or an enclosed area where wash water will be trapped and then pumped for transport to an appropriate disposal location

The storm drain system can also be protected using water-filled berms or water-filled storm drain covers. These types of barriers are reusable and generally conform to the ground or pavement surface, creating a tight seal.

Do not dump mop water or carpet cleaning water outdoors. It can be poured into the sanitary sewer using an indoor drain, as long as it is not contaminated with hazardous materials. Mop water or carpet-cleaning water may need to be filtered if it contains large particles or sludge.

Power or pressure washing is very inefficient in water usage because it is not evident how much pressure is needed to clean the surface. This is particularly true for rental equipment or for recently purchased equipment. Someone may try to clean a building for an hour with a pressure washer prior to concluding that the pressure washer is ineffective. Therefore, it is best to examine all alternatives prior to using a pressure washer or steam cleaner.

Commercial Power Washing, Pressure Washing, and Steam Cleaning

Use a licensed commercial washing business that has modern equipment. Verify that the business protects the environment by isolating the area to be

cleaned from draining into storm drains. A commercial washing business must collect wash water and dispose of it properly. Oftentimes, the wash water will be filtered and recycled.

It is the responsibility of the property owner to make sure that a mobile washing service manages wash water properly. Mobile washing services are generally required to haul the wash water and rinse water offsite; pretreatment may be required prior to discharging into the sanitary sewer system.

Persons engaged in the discharge of non-storm-water discharges that do not have a direct discharge to any surface or subsurface waters must obtain a State Operation Permit (SOP) from the Tennessee Division of Water Pollution Control (WPC). The permit is for anyone generating wastewater who does not have a direct discharge, but rather is land-applying by spray or drip irrigation, or collecting and temporarily holding discharges. Mobile car washes or other pressure washing operations require a permit.

The SOP requires that all soaps, detergents, and other chemicals used should be nontoxic and biodegradable. In addition, "chemically enhanced" (soaps, detergents, or other chemicals) waste wash waters being discharged by mobile wash operations must be collected for proper disposal. If a discharge is composed entirely of wash water that is not "chemically enhanced," the permit allows the discharge to travel by sheet flow to a gravel or grassy area where there is no opportunity to enter waters of the state. In no case does the permit allow a discharge to a storm water inlet, ditch, conveyance, or stream. Permitting information and forms may be found at http://www.tennessee.gov/environment/permits/wqoperm.php . Contact TDEC at (888) 891-8332 for additional information.

Limitations

- It is difficult to estimate the effectiveness of power or pressure washing prior to attempting the effort.
- It takes a substantial effort to control wash water generated on a rooftop or the side of a building.

References **31, 33, 34, 35, 99, 103, 138** (see BMP Manual Chapter 10 for list)

ACTIVITY: Swimming Pools and Spas	IC – 09

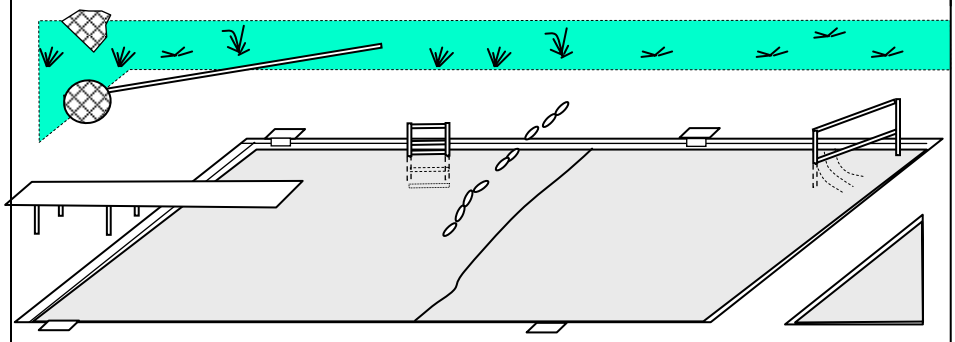

Targeted Constituents				
● Significant Benefit		◗ Partial Benefit	○ Low or Unknown Benefit	
○ Sediment	○ Heavy Metals	○ Floatable Materials	● Oxygen Demanding Substances	
○ Nutrients	● Toxic Materials	○ Oil & Grease	○ Bacteria & Viruses	○ Construction Wastes

Description

Chemical treatment of swimming pools and spas may prevent health concerns to bathers by killing organisms that live in the water. However, the chemicals that kill such organisms in pools and spas also kill aquatic life (fish, minnows, salamanders, crayfish) in creeks and streams that receive water with chemicals such as chlorine.

Suitable Applications

- Businesses or residential properties that own or maintain a swimming pool or spa
- Commercial contractors that clean and maintain pools and spas

Approach

Since a variety of pool and spa treatment chemicals exists, it would be impossible to address proper disposal methods for every available chemical used in the treatment of pool and spa water. Due to federal mandates, Memphis and Shelby County adopted Storm Water Ordinances to prohibit discharge of non-storm-water materials (see IC-01, Non-Storm-Water Discharges to Storm Drains) such as chlorine, Baquacil, and other treatment chemicals into streets, ditches, storm drains, and natural streams.

The most common pool treatment is chlorine, which dissolves in water and is then very slowly released to the atmosphere as chlorine gas. This process is usually inhibited by the addition of other chemicals. Bromine is another type of pool chemical that is also commonly used. There is a large variety of chemical products that are frequently used to reduce algae growth, adjust pH, remove hardness or metals, remove stains, etc. Memphis and Shelby County swimming pool and spa owners should use pool testing kits to monitor water conditions, and choose environmentally friendly products if available.

Swimming pool water will naturally release chlorine gas at a rate that is dependent upon water and air temperature, presence of chemical inhibitors,

amount of sunlight, amount of wind, water depth and circulation, etc. The process typically takes many days and requires that water should be periodically tested to monitor chlorine levels.

Reducing or Eliminating Discharges

- Before buying chemicals, select a method of pool treatment that has been successfully used in the Memphis and Shelby County area. Investigate and compare products to ensure that a proven method is selected. Select a method with the least toxic chemicals or chemicals that can be easily neutralized and removed from water.

- Retailers and manufacturers must make information readily available to customers, such as material safety data sheets (MSDS), with each chemical product to cover proper use of chemicals, safety issues, and safe disposal methods. All users of pool and spa chemicals should verify that the discharge and disposal process for any water treated with chemical products will be able to comply with federal and state regulations in addition to the manufacturer's recommendation.

- Do not overfill swimming pools and spas so that water is discharged with every splash and wave. Allow adequate freeboard for rainfall and storms. Splashes and waves should drain to a grassy area for ground infiltration.

- Most in-ground pool owners do not choose to drain the pool each year. It is beneficial to leave an adequate weight of water for in-ground swimming pool or spa to prevent cracking or uplift.

Recommended Disposal Alternatives

- Any swimming pool or spa water that has been treated by chlorine only and dechlorinated may then be discharged to grassy yards, streets, or the storm water system. Before discharging dechlorinated pool or spa water, check the water with a pool test kit to verify that it is completely dechlorinated. Dechlorinated discharges to streets and driveways should only occur in dry weather when it will not contribute to flooding for neighbors who live downstream. Do not discharge water during winter months for safety reasons if there is a potential for water freezing in the streets, curbs, and gutters.

- Any swimming pool or spa water that has been treated by chemicals other than chlorine is expressly prohibited from discharge to the storm drain system, even if the chemical has been neutralized. Disposal options include: 1) discharging to the sanitary sewer system, 2) drain pool and spa water at a very slow rate to grassy yards where the water will soak into the ground, and 3) constructing an infiltration well or trench to allow water to soak into ground. Typical disposal method is to connect a hose

from swimming pool to sanitary sewer system. Connection to sanitary sewer system must be approved by City of Memphis and Shelby County Code Enforcement (379-4270). Do not discharge water onto or through neighbor's yard or property. Due to clay soil types, infiltration rates will be very low and a percolation test may be necessary. An infiltration system may dissolve underlying natural limestone rock; geological information and advice should be consulted.

- Backwash water cannot be discharged directly to the storm water system unless it is completely dechlorinated and not treated with any other chemicals. Typical disposal method for backwash is to connect backwash hose from swimming pool or spa to the sanitary sewer system using a licensed plumbing contractor to install backflow prevention devices. Connections to sanitary system must be approved by City of Memphis and Shelby County Code Enforcement (379-4270) prior to installation. Alternate disposal method for backwash is to construct an infiltration well or trench as described in ST-03.

Limitations

- Disposal methods that comply with the City of Memphis and Shelby County Storm Water Ordinances may not necessarily comply with federal, state, and county regulations. Resolve compliance issues prior to discharging water from swimming pool or spa.

References

30, 31, 32, vendor information (see BMP Manual Chapter 10 for list of references)

ACTIVITY: Dumsters	IC – 10

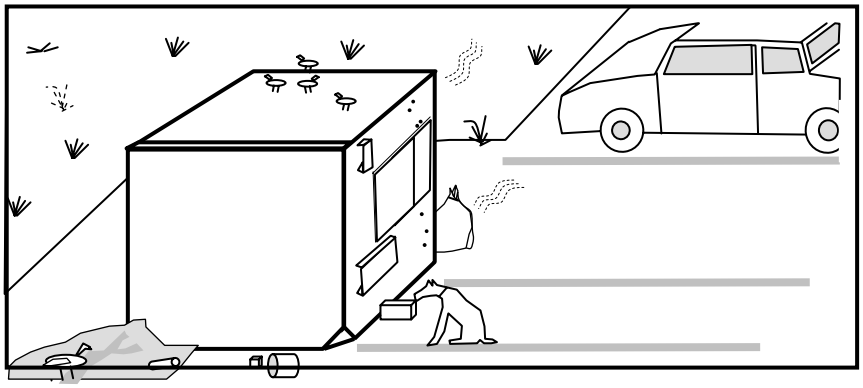

Targeted Constituents

● Significant Benefit ◗ Partial Benefit ○ Low or Unknown Benefit

◗ Sediment	◗ Heavy Metals	◗ Floatable Materials	Oxygen Demanding Substances	
Nutrients	◗ Toxic Materials	Oil & Grease	Bacteria & Viruses	◗ Construction Wastes

Description

Dumpsters are a major source of pollution throughout the City of Memphis and Shelby County, usually due to improper use and maintenance. Dumpsters are intended for solid waste only. In most cases, liquid waste should be poured into an indoor drain connected to the sanitary sewer system. Dumpsters are designed specifically to keep solid waste dry (away from rainfall) by closing the top, side doors, and drain plug. Methods to reduce storm water impact from Dumpsters contribute to the many other benefits of Dumpsters: rodent and insect control, reducing odors, neat appearances, efficient waste removal.

Approach

The Dumpster was invented prior to 1940 by native Tennessean George Dempster (who later became mayor of City of Knoxville in the 1950s). The novel feature of the Dempster Dumpster was that a metal container could be detached and transported as needed. The detachable metal bins were originally developed for the mining industry, but were adapted for solid waste collection in 1938.

A Dumpster is a large metal trash bin that is designed to be transported or emptied by specially-equipped trucks. Many types of Dumpsters are currently available. Smaller businesses often choose a cube-shaped Dumpster that can be emptied by front-end loader trucks (with hydraulic forks). Larger businesses and industries may choose a larger roll-off Dumpster; when full, the Dumpster is loaded onto a truck and transported to the landfill. Construction companies usually select a roll-off-type Dumpster.

Dumpsters are intended for solid waste only. Therefore, do not dispose of liquid wastes into a Dumpster. Do not put containers or bags with liquid waste into a Dumpster. For most commercial Dumpsters, a front-end loader truck will raise and tilt the Dumpster, at which point any liquids would spill onto the truck and surrounding pavement. The truck hydraulically compacts the trash, which would then release any liquids that were inside containers and bottles.

Reasons for proper disposal of solid waste and maintenance of Dumpster areas are:

- Dumpsters are usually visible to the general public, and especially the patrons!
- Dumpsters can cause odors.
- Dumpsters can harbor insects, rodents, and other pests.
- Dumpsters can cause bacteria and viruses that will harmfully impact employees, patrons, visitors, etc.
- Protect the environment by protecting natural creeks and streams.
- Health inspectors and storm water inspectors will regularly check Dumpsters for inadequate conditions. Fines or other penalties may be issued.

Do not use Dumpsters to get rid of used fats, oils, and grease (typically used by kitchens and restaurants). In some cases used fats, oils, and grease can be recycled using special containers. These substances are not only harmful to natural waterways and the environment, they also clog sanitary sewer lines. See IC-07, Food Service and Handling, for additional information about grease traps, grease interceptors, sizing requirements, inspections, maintenance, etc.

City and county storm water inspectors are often called to investigate leaking Dumpsters. Memphis and Shelby County Storm Water Ordinances allow the assessment of civil penalties up to the maximum allowable per day (during which the act or omission continues or occurs) for illegal discharges. Tennessee Department of Environment and Conservation (TDEC) can also assess fines for Dumpster violations include. City and county storm water inspectors may or may not issue a Notice of Violation, depending on the amount of pollution, intent to pollute, and other factors.

Disposal of any non-storm-water discharges to the ground or to the storm drainage system is illegal; refer to IC-01 for more information. Report illegal dumping to the storm drains or local waterways to the Storm Water Hotlines at 576-6721 (City of Memphis) or 545-3870 (Shelby County).

Common Waste Types

- Dumpsters are intended for solid waste only. Most Dumpsters are emptied by a front-end loader truck that raises and tilts the Dumpster. Any liquid wastes would then splash onto the ground, resulting in pollution, odors, harmful bacteria, and viruses, stains, etc.

- Do not pour liquid waste into a Dumpster. Liquid waste must be handled separately, usually by pouring into an indoor drain connected to the sanitary sewer system. Some types of liquid waste can be recycled, such as automotive fluids and restaurant grease. Some liquids are considered to be hazardous wastes. Hazardous wastes can be handled at the waste collection center at Shelby Farms for household hazardous waste or by using a licensed waste contractor.

- Fats, oils, and grease should not be poured into a Dumpster. See IC-07, Food Service and Handling, for more information on grease interceptors, grease traps, and recycling. The city closely monitors businesses and restaurants for fats, oils, and grease due to the high potential for clogging sanitary sewers.

- Automotive fluids can be recycled at automotive retailers, service stations, and at the city waste collection center at Shelby Farms. Automotive fluids are considered as hazardous waste; just a small amount can kill fish, pollute streets, coat storm drains, etc.

Maintenance and Use

- Locate the Dumpster away from storm drainage inlets and channels. In addition to being accessible for the Dumpster waste contractor trucks, the Dumpster must be easily accessible to employees. Consider placing the Dumpster in a shaded area.

- Keep Dumpster lids and hatches closed to keep out rainwater. Insist on a fully functional Dumpster with adequate lids and doors. Verify that the drain plug at the bottom of a Dumpster is securely in place to prevent discharges. Call the Dumpster leasing company to replace faulty equipment or fittings.

- Keep Dumpster secured to prevent illegal dumping and scavenging. A lockable enclosure may be needed if the Dumpster is not behind a secured fence or otherwise protected. A fence may also be desirable if placing a Dumpster in a visible area.

- Keep loading areas and surrounding parking lot clean. Pick up trash and litter as needed (at least daily). Sweep areas clean using a broom and dustpan; do not use a pressure washer or a leaf blower to collect litter.

- Never place leaky bags or liquid waste into the Dumpster. Drain liquids into an indoor drain that leads to the sanitary sewer system. Use a dry method, such as absorbents or kitty litter, to absorb liquid wastes and spills. Sweep up absorbents promptly and dispose as solid waste.

- Dumpsters must be inspected on a regular basis, preferably daily and at the end of each shift.

- Dumpsters should be cleaned periodically in a manner that does not generate a lot of wash water. In general, do not use power or pressure washing to clean Dumpsters or Dumpster pads. Use a bucket of water with brushes, sponges, and cloths. Minimize the use of detergents and toxic cleaning agents.

Design for New Projects

- New development or redevelopment projects should include a paved Dumpster pad. The pad should incorporate curbs or dikes around the Dumpster pad to redirect storm water.

- Locate the Dumpster pad away from storm drainage inlets and ditches. When possible, the Dumpster pad should drain to a grassy area with a gentle slope, which functions as a filter. See ST-05, Filter Strips and Swales, for additional ideas and information.

- Locate the Dumpster pad in an area easily accessible for employees and for the Dumpster waste contractor trucks. Consider placing the Dumpster in a shaded area. Use fences and/or lockable enclosures to prevent illegal dumping and scavenging. Fences and enclosures also improve site aesthetics.

- For areas that require frequent cleaning, a diversion drain can be constructed that will flow to the sanitary sewer system. The diversion drain can function automatically or manually, and is available as a commercially produced unit.

- Fox Environmental Systems makes a wash water diversion valve that allows wash water to automatically divert to a sanitary sewer drain when the sprayer hose is used (see Figure IC-10-1). Otherwise, the valve will divert flow to the storm drainage system. See http://www.foxenviro.com.au for additional information and details on this product or other types of diversion drains.

Summary of Benefits

Proper placement and use of Dumpsters has many benefits. By reducing exposure to rodents and insects, the Dumpster user will also prevent storm water pollution and the generation of liquid wastes. Dumpsters are designed to minimize opportunities for rodents and insects, as long as the lids and doors are closed at all times. Keep drain plugs, located at the bottom of a Dumpster, closed in order to prevent rodents. Place Dumpsters on pavement rather on soil, to minimize the number of pests living immediately adjacent to a Dumpster.

References

31, 33, 34, 35, 197 (see BMP Manual Chapter 10 for list)

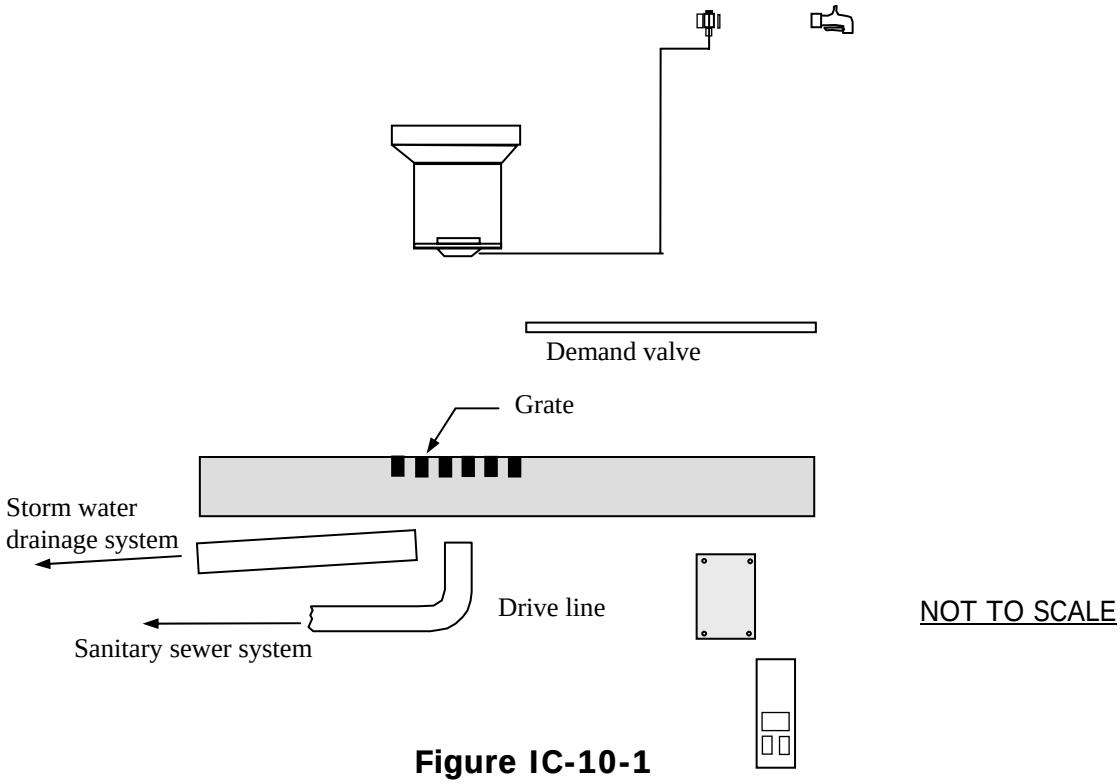

Figure IC-10-1
Hydraulically Activated Wash Water Diversion System

Notes:

1. An automated wash water diversion system represents one method of controlling Dumpster runoff. Other methods may include manually controlled systems.
2. The two figures show products manufactured by Fox Environmental Systems (http://www.foxenviro.com.au).
3. Connections to a sanitary sewer system must be approved by the City of Memphis Sanitary Sewer Department prior to construction.

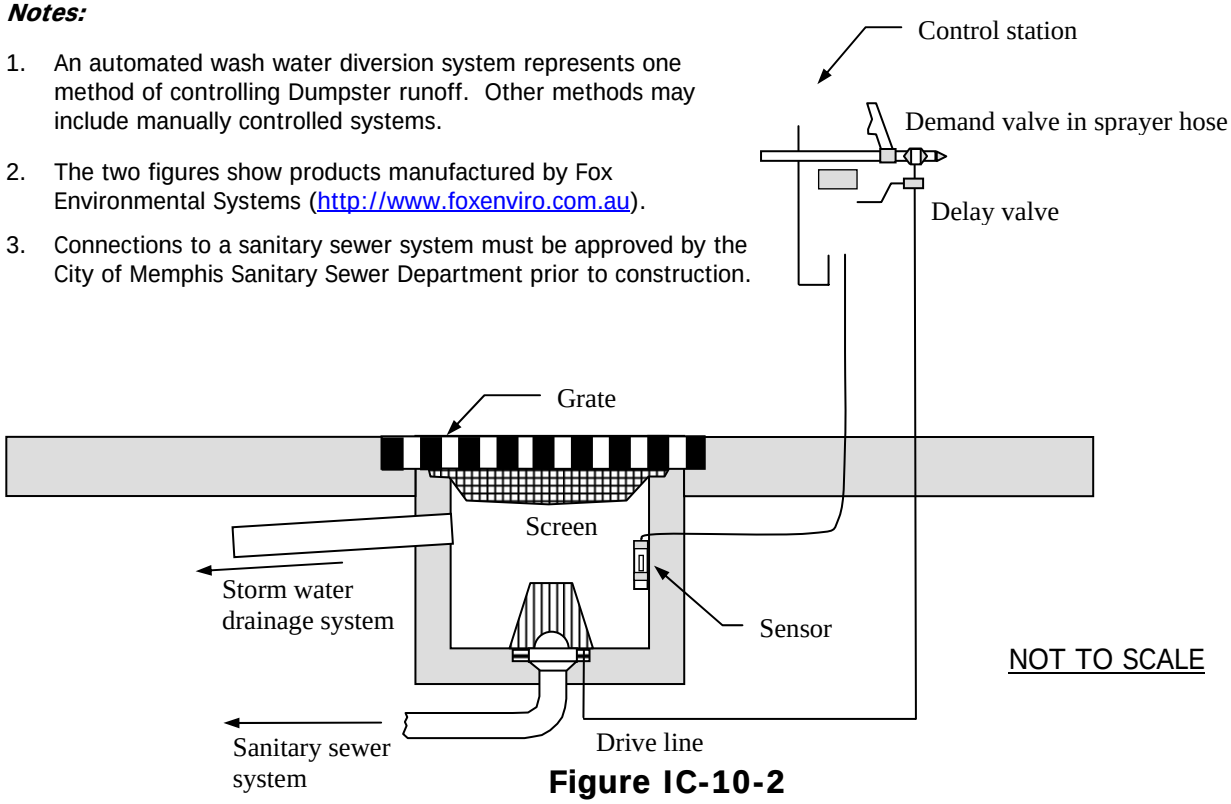

Figure IC-10-2
Automated Wash Water Diversion System

ACTIVITY: Kitchen Exhaust Cleaning	IC – 11

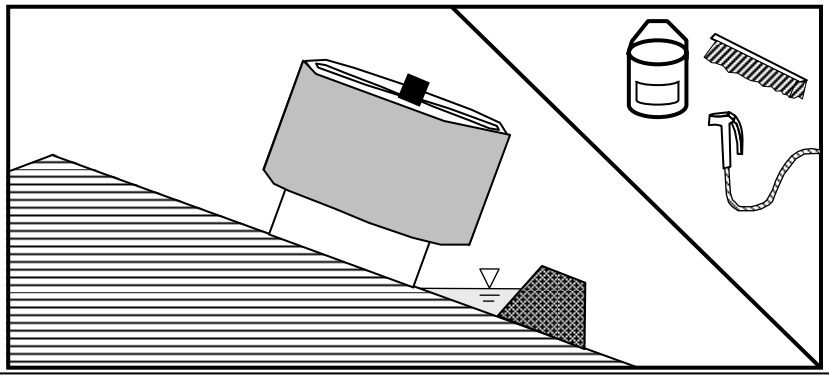

Targeted Constituents

● Significant Benefit ◗ Partial Benefit ○ Low or Unknown Benefit

○ Sediment	○ Heavy Metals	○ Floatable Materials	Oxygen Demanding Substances	
Nutrients	● Toxic Materials	● Oil & Grease	Bacteria & Viruses	○ Construction Wastes

Description

For restaurants and commercial kitchens, the cleaning of kitchen exhaust systems is required by law in order to avoid fire hazards from excessive grease buildup. Methods of cleaning are generally proscribed by National Fire Protection Association (NFPA) 96, Standard for Ventilation Control and Fire Protection of Commercial Cooking Operations. Requirements for inspection and cleaning include grease removal devices, exhaust systems, hoods, fans, and cooking equipment. Eliminate non-storm-water discharges by controlling all water, grease, solvents, cleaners, and other fluids generated in the cleaning process. Do not allow grease or solvents to contact roof surfaces, gutters, parking lots, or other areas that receive rainfall.

Approach

Exhaust systems generally consist of an exhaust hood, plenum, filters or baffles, exhaust stack, and a roof fan. Each exhaust system tends to be unique due to:

— different combinations of possible equipment
— restaurant layout and design
— building architecture and constraints

Hoods and filters are usually made of stainless steel, galvanized steel, or aluminum in order to facilitate regular cleaning. Stacks are usually made of fabricated black iron and are required to be leak proof so that cleaning with pressure washing equipment can take place. Common types of roof fans are upblast, squirrel cage, and supreme.

Disposal of any cleaning or wastewater discharges onto the ground, or any surface that washes off into the storm drainage system or natural streams, is a direct violation of the Memphis and Shelby County Storm Water Ordinances. Refer to IC-01, Non-Storm-Water Discharges to Storm Drains. Report illegal dumping to the storm drains or local waterways to the

Storm Water Hotlines at 576-6721 (City of Memphis) or 545-3870 (Shelby County).

Many restaurants and other smaller businesses may not know whether a particular drain leads to the storm drain system or the sanitary sewer system. Contact the property owner for plans indicating which pipes are connected to storm drains and which to the sanitary sewer. If plans are not available, contact the City of Memphis Sewer Department for assistance. A plumbing contractor can verify which pipes are connected to the sanitary sewer system. Procedures using smoke, dye tests, or air-monitoring equipment can also be used to identify sanitary sewer lines. All drains inside of a building or within a covered structure must be connected to the sanitary sewer. All drains outside of a building and exposed to rainfall should be connected to the storm drain system. This common-sense approach was not generally in effect for older buildings and neighborhoods, so it is important to verify that each pipe connects to the proper drain. Even newer buildings may not be configured in the correct way due to shortcuts taken by or assumptions on the part of a building contractor.

Methods ***Typical Kitchen Exhaust Cleaning Procedures***

Kitchen exhaust cleaning is a multistep operation designed to clean all of the system components to bare metal. This operation must be planned in order to clean each component thoroughly while protecting surrounding areas by working from the top down. Protect workers by disconnecting electricity to the exhaust cleaning system. A variety of cleaning equipment and supplies (degreasers, brushes, sponges, etc.), should be on hand. The following is a typical list of exhaust cleaning procedures for each hood:

- Erect a waterproof tarp underneath the hood in order to collect wastewater and grease coming down the stack. The tarp must be securely fastened along all edges, in order to protect cooking equipment and surrounding areas. The tarp must be structurally supported or braced to handle the expected amounts of wastewater.

- Remove filters and drain cups from the hood. Clean these components down to bare metal by soaking with chemical degreasers and then rinsing with high-pressure water. Try to remove any thick grease first, and dispose of grease properly.

- Clean the roof exhaust fan inside and out, down to bare metal, using chemical degreasers and then rinse with high-pressure water. The exhaust fan may need to be partially disassembled in order to clean fully.

- The exhaust stack is sprayed with chemical degreaser and then rinsed with high-pressure water. Remove exhaust duct access doors as necessary to clean and inspect the interior of the exhaust stack.

- The plenum and interior of the exhaust hood are sprayed with chemical degreaser and then rinsed with high-pressure water.

- Allow the hood/stack/fan system to fully drain and then dry by air. Remove tarp and dispose as solid waste. It is very difficult to clean and reuse the tarp, so disposal is recommended.

- Dry the exhaust hood, and polish stainless steel surfaces as necessary. Replace filters and drain cups. Clean and polish wall surfaces in the immediate vicinity. Mop floors as needed.

There are several local companies that provide kitchen exhaust cleaning services; these companies must be familiar with NFPA 96 in order to properly inspect, clean, and reinstall kitchen exhaust systems. These companies have specialized equipment and the proper supplies to perform the work quickly and efficiently. In general, kitchen exhaust cleaning is performed late at night or during weekends to allow the maximum amount of time for cleaning and drying. Restaurant operators are responsible to hire only qualified contractors for kitchen exhaust cleaning.

Grease and Wastewater Recovery

Most kitchens and restaurants are required to have a grease trap as part of the sanitary drain systems in the cooking area. In addition, most kitchens and restaurants typically have an outdoor grease receptacle for the disposal and recycling of thick grease. Whenever thick grease is encountered, it should be scraped from the surface and then placed into the outdoor grease receptacle. This will increase the maintenance interval of a grease trap, and help to ensure the sanitary sewer systems will function adequately without adverse results.

During the entire process of kitchen exhaust cleaning, there is a substantial amount of wastewater generated. It is illegal to discharge this wastewater outdoors onto the ground or parking lot, into a ditch or storm drainage system, or into a natural stream. Refer to IC-01, Non-Storm-Water Discharges to Storm Drains. Illegal discharges can be reported anonymously to the Storm Water Hotlines at 576-6721 (City of Memphis) or 545-3870 (Shelby County).

Wastewater may either be disposed into the indoor sanitary sewer system, or removed for legal disposal by a wastewater disposal company. Any wastewater that contains grease is typically poured into a sink or floor drain that leads to a grease trap. The property owner should verify that all indoor floor drains lead into the sanitary sewer system. Otherwise, further modifications to the floor drains will be necessary.

Cleaning Methods for Exhaust Roof Fans

Exhaust fans typically are the hardest elements to clean. There are more surfaces for grease to accumulate on (fan blades, motor casings). Heavy accumulations of grease can put undue stress on fan motors, bearings, and drive belts (due to the excess weight). Exhaust fans must be cleaned thoroughly, both inside and outside, down to the bare metal surfaces.

Do not clean near catch basins, ditches, pipes, or any part of the storm water drainage system. Collect wastewater and rinse water by appropriate means for disposal into the interior sanitary drains. Exterior portions of the fan casing should be cleaned and rinsed by hand when necessary to avoid discharging wastewater onto the roof. However, a tarp or a child-sized swimming pool is also commonly used to contain wastewater and high-pressure water while cleaning the exterior surfaces.

Squirrel Cage Fan:

Squirrel cage fans usually have an integral water collection drain on the bottom, which simplifies the process of cleaning the interior surfaces. Collect wastewater into a watertight container, which can then be emptied into an interior sanitary drain leading into the grease trap. The exterior surfaces of squirrel cage fans may be cleaned by hand; there is generally a miniscule amount of grease on these surfaces.

Supreme Fan:

Supreme fans have an integral grease collection tray with a ball valve spout. This allows the interior cleaning wastewater to be collected into a watertight container, which can then be emptied into an interior sanitary drain leading into the grease trap. Wastewater from cleaning the underside of the fans will run down the stack. Supreme fans have the fan motor and blades mounted on a pivoting assembly that pops out of the fan housing. Ensure that all wastewater is collected when washing the fan blades and housing assembly.

Upblast Fan:

Upblast fans have an integral water collection spout on the bottom that simplifies the process of cleaning the interior surfaces. Collect wastewater into a watertight container, which can then be emptied into an interior sanitary drain leading into the grease trap. Wastewater from cleaning the underside will run directly down the stack. The fan assembly is usually cleaned in the normal position, and then tilted up for additional cleaning. Ensure that all wastewater is collected when washing the fan blades and housing assembly.

Roof Wastewater Collection Methods

Do not allow any roof wastewater or cleaning water into the municipal storm water drainage system, ditches, catch basins, natural creeks and streams, etc. Preferable methods for cleaning exhaust roof vents will not generate uncontrolled wastewater or rinse water on roofs. A watertight tarp can be securely fastened along all edges around an exhaust fan, with some sort of structural support or bracing to handle the expected water amounts. A child-sized swimming pool can be easily altered to perform as structural support for a watertight tarp.

As an alternate method, the roof itself can be used to store or contain wastewater. Flat roofs have drains that can be temporarily stopped up. Then the low point of the roof can be used as a collection point for grease and wastewater, which is then vacuumed and safely disposed. If needed, gutters or downspouts can be temporarily stopped and then used as a collection point. Wastewater must be collected into a suitable vacuum truck. The contaminated roof areas must be cleaned and rinsed a few times.

Maintenance

- Inspection of kitchen exhaust systems should occur weekly or as recommended by the equipment manufacturer. Cleaning and maintenance of kitchen exhaust systems should occur as soon as possible after a deficiency is noted.

- Keep adequate records of inspections and maintenance work at the restaurant or kitchen location. Records must be made available to City of Memphis and Shelby County inspectors upon request.

Limitations

- Some restaurants or kitchens may have space or access limitations that hamper efforts to inspect and clean kitchen exhaust systems. This may necessitate the removal of ovens, exhausts, or other types of kitchen equipment on a regular basis to adequately inspect kitchen exhaust systems.

Additional BMPs

These BMPs contain additional information related to kitchen exhaust cleaning:

IC-01	Non-Storm-Water Discharges to Storm Drains	IC-10	Dumpsters
IC-07	Food Service and Handling	AM-01	Employee Training
IC-08	Power or Pressure Washing		

Summary

Due to the toxic nature of the cleaning chemicals involved, and the heavy amounts of grease and oil generated, kitchen exhaust cleaning has frequently caused severe pollution and degradation of natural creeks and streams, including noticeable fish kills. Many restaurants have been caught and fined heavily for this type of pollution.

References **31, 33, 34, 35, 99, 103, 138, 193** (see BMP Manual Chapter 10 for list)

National Fire Protection Association (NFPA) 96: Standard for Ventilation Control and Fire Protection of Commercial Cooking Operations http://www.nfpa.org/

ACTIVITY: Air Conditioners and Refrigeration — IC – 12

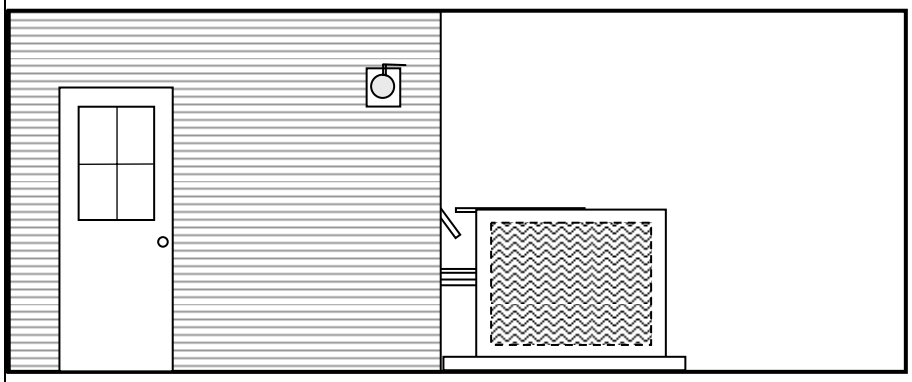

Targeted Constituents

● Significant Benefit ◗ Partial Benefit ○ Low or Unknown Benefit

○ Sediment	○ Heavy Metals	○ Floatable Materials	◗ Oxygen Demanding Substances	
○ Nutrients	● Toxic Materials	○ Oil & Grease	○ Bacteria & Viruses	○ Construction Wastes

Description

The purpose of this BMP is to reduce pollution impacts from cleaning and maintenance of air-conditioning and refrigeration units. It is allowable to discharge condensate water, which is essentially pure water from the atmosphere. It is illegal to discharge any water that contains chemicals, detergents, algae-killing agents, and other man-made substances onto the ground or onto any surface that drains to the city storm water drainage system, ditches, swales, curbs, natural creeks, and streams or wetlands. Even if the contaminated water does not directly reach the storm drainage system, the chemicals will wash into the storm water runoff during the next rainfall.

Approach

It is illegal to discharge any substance (liquid or solid) to the environment in any manner that could allow the substance to wash into the municipal storm water drainage system, ditches, swales, natural streams and creeks, wetlands, or sinkholes. This prohibition is mandated by federal and state regulations, and also included in the Memphis and Shelby County Storm Water Ordinances. Memphis and Shelby County are required to prohibit non-storm-water discharge as part of the National Pollutant Discharge Elimination System (NPDES) permits issued to the City of Memphis and Shelby County by the state of Tennessee.

See IC-01, Non-Storm-Water Discharges to Storm Drains, for a list of exempted discharges. Both air-conditioning condensate and refrigeration condensate are on the list of allowable discharges, provided that such water is distilled pure water taken from the atmosphere. However, any cleaning water or wash water can not be discharged to the ground, but must be captured for disposal in the sanitary sewer system.

When cleaning air-conditioner coils, capture wash water and dispose properly. Minimize the use of chemicals and cleaning agents by scrubbing to remove dirt and deposits. If power or pressure washing, then contain all generated wash water for recycling and proper disposal.

In addition to imposing possible fines and civil penalties, the Tennessee Department of Environment and Conservation (TDEC) investigates water quality complaints received from the general public. The local TDEC office regularly investigates known water quality issues on City of Memphis and Shelby County creeks and streams.

ACTIVITY: Farms and Agricultural Land | IC – 13

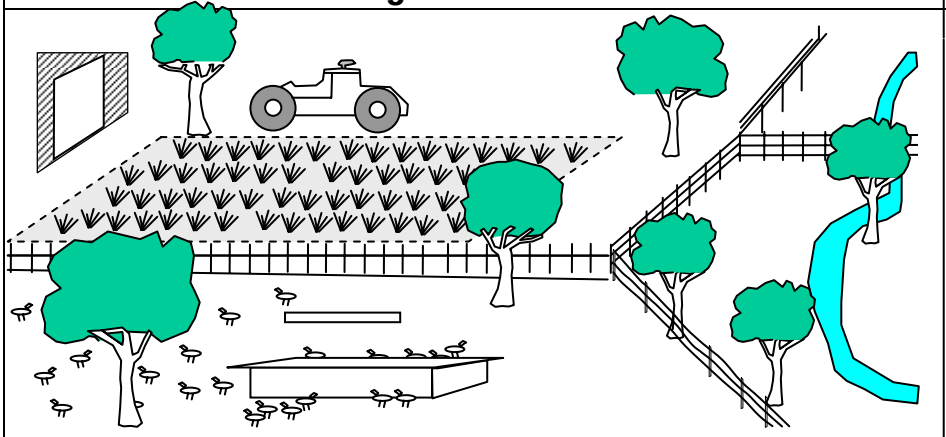

Targeted Constituents

● Significant Benefit ◗ Partial Benefit ○ Low or Unknown Benefit

● Sediment	○ Heavy Metals	○ Floatable Materials	Oxygen Demanding Substances	
● Nutrients	● Toxic Materials	○ Oil & Grease	● Bacteria & Viruses	○ Construction Wastes

Description

Small farms, pastures, cropland, and other agricultural lands are potential sources of water quality degradation from a number of factors, particularly when located near a natural stream, storm drainage system, or other runoff conveyance. Common-sense approaches will minimize water quality impacts, improve neighborhood relationships, and satisfy legal obligations. Potential impacts include: soil erosion, overuse of chemicals such as pesticides and fertilizers, animal waste discharges, meat or dairy processing activities, etc.

Approach

Large and medium farms are governed by state rules and regulations from the Tennessee Department of Agriculture (TDA) and the Tennessee Department of Environment and Conservation (TDEC). In particular, TDA and TDEC focus on certain land uses defined as an Animal Feeding Operation (AFO) or a Concentrated Animal Feeding Operation (CAFO). See the TDEC permit Web site at http://www.state.tn.us/environment/permits/ and the TDA Web site at http://www.state.tn.us/agriculture/ for definitions and permit requirements.

Small farms and agricultural lands must also meet the basic state standards for not polluting waters of the state, creating a public nuisance, or harming the environment and wildlife. Common-sense solutions to protect storm water quality involve the efficient use of land, materials, and topography — the very things that farmers strive for. Good housekeeping procedures and storage methods will greatly reduce the potential for storm water pollution, leaks, and spills.

Due to federal mandates, Memphis and Shelby County Storm Water Ordinances prohibit discharge of soil, sediment, chemicals, debris, animal or human wastes (see IC-01, Non-Storm-Water Discharges to Storm Drains) into streets, ditches, storm drains, creeks, and streams. This prohibition

includes chlorinated water, any soil or mulch, fertilizers, pesticides, nutrients such as fertilizer and lime, animal wastes, hay or straw clippings, meat or dairy processing wastes, etc. In addition to being toxic, these substances change the pH, oxygen, and turbidity of natural creeks and streams. Damage from toxic materials can take months or years to accumulate

Guidelines

- Create buffer zones near natural creeks, streams, wetlands, public waterways, and drainage ditches. A typical buffer zone width of 25 feet will allow grass, trees, and shrubs to protect waterways by filtering sediments, absorbing nutrients, and reducing toxic substances, and heavy metals.

- When using natural streams and creeks as a source of water for animals, limit the potential for animals to urinate or defecate directly into the water. Reduce potential for animals to cross the creek or waterway repeatedly, or to otherwise disturb the channel by causing erosion. Locate fences to protect waterways.

- Plan all activities and operations to minimize the potential for storm water contact, spills, leaks, and exposure to the weather. It may be helpful to create a property map that shows the location of all creeks, streams, wetlands, sinkholes, and drainage ditches in relation to pastures, crops, buildings, barns, and other structures. Limit the amount and types of activities that occur in floodplains or flooded areas.

- Store materials and supplies away from the weather, typically either inside a structure (shed, barn) or protected with tarps. Construct a small bermed or depression area on the downstream side to prevent offsite movement of loose bulk materials.

- Store animal wastes (manure) at locations away from creeks, drainage channels, ponds, sinkholes and other environmentally sensitive areas. Minimize potential for storm water impact if possible by storing under a tarp or roof (such as a barn).

- Do not use more water than the soils and crops can absorb. Excess water damages the plowed cropland by washing away the nutrients and soil. Lower the flow rate and increase watering time as necessary to avoid overland discharge.

- Use herbicides, pesticides, and fertilizers responsibly in accordance with manufacturer's instructions. Do not overapply these hazardous materials; this would be the equivalent of pouring toxic chemicals directly into the natural streams and creeks. Herbicides and pesticides should be applied after rainfall or watering occurs, and a dry period of a few days is expected.

Maintenance

- Review farm operations regularly to ensure that storm water pollution is not occurring. The farm operator or landowner should occasionally inspect the property during large rainfall events to become aware of drainage problems.

- Maintain records for hazardous materials and chemicals (such as quantity purchased, instructions, chemical name, etc). Properly control all materials using responsible farm management principles.

Related BMPs

These BMPs are also related to farm management and agricultural lands:

AM-01	Employee Training (with a table for waste disposal alternatives)
AM-13	Pesticides, Herbicides, and Fertilizer Use
ES-04	Gradient Terraces and Silt Trenches
ES-05	Surface Roughening
IC-01	Non-Storm-Water Discharges to Storm Drains
IC-02	Outdoor Loading and Unloading of Materials
ST-05	Filter Strips and Swales

References

31, 32 (see BMP Manual Chapter 10 for list)

TDA Web site — http://www.state.tn.us/agriculture — Forestry BMP rules, pesticides

TDEC Web site
http://www.state.tn.us/environment/permits — CAFO general permit

UT Agricultural Extension Service
http://www.utextension.utk.edu/
Farm management, pest management, environment, and natural resources

ACTIVITY: Response to Sanitary Sewer Overflows	IC – 14

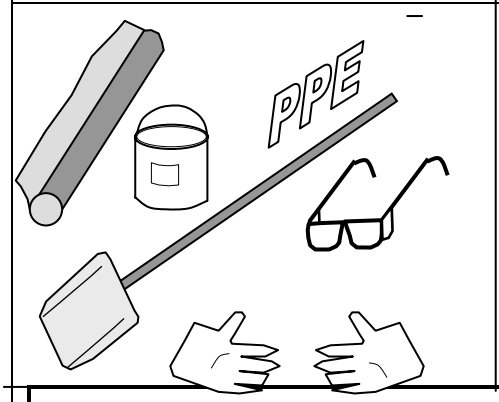

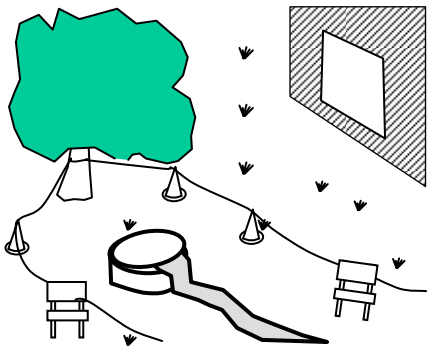

Targeted Constituents

Significant Benefit		Partial Benefit	Low or Unknown Benefit	
○ Sediment	○ Heavy Metals	◗ Floatable Materials	● Oxygen Demanding Substances	
● Nutrients	◗ Toxic Materials	○ Oil & Grease	● Bacteria & Viruses	○ Construction Wastes

Description

This BMP is intended to describe the general procedures and precautions necessary when responding to sanitary sewer overflow (SSO) incidents. **Citizens should report SSOs directly to the wastewater system operator for immediate response.** Wastewater system employees receive training and equipment necessary to handle SSO incidents using procedures that meet state and local guidelines.

Wastewater system operator	Telephone # to report SSOs
City of Memphis Sanitary Sewer	**529-8025**
Shelby County Wastewater Management	**301-5801**

Wastewater system employees will respond to reported SSO incidents and follow procedures that meet state and local guidelines. These guidelines are intended as the minimum standards for SSO response by various wastewater system operators. Large industrial/commercial facilities may have the resources of responding to blocked sanitary laterals in a safe and effective manner.

Approach

The primary objective in SSO response shall be to protect human health, private and public property, and the environment. It is a known fact that sanitary sewage may contain viruses, bacteria, and other pathogens that are harmful to human and animal life. All practical steps must be taken to prevent the general public from having direct contact with areas contaminated by raw untreated sewage.

The wastewater system operator is responsible for posting signs and barricades as soon as possible to warn the general public about SSO occurrences. Restrict access to the contaminated areas. In addition, SSO responders should be aware of indirect exposures (through pets, birds, flies, mosquitoes, etc.) and take steps to prevent or reduce these exposures.

An SSO discharge is a direct violation of the National Pollutant Discharge Elimination System (NPDES) permits issued to each of the wastewater system operators. In addition, the SSO discharge also violates the NPDES municipal storm water permits issued to the City of Memphis and Shelby County by the Tennessee Department of Environment and Conservation (TDEC).

SSO Response Guidelines

Personal Protective Equipment (PPE)

- Wastewater system employees who respond to an SSO incident should wear appropriate personal protective equipment (PPE) to prevent any contact with raw sewage. PPE may include: rubber gloves, rubber boots, impermeable coveralls (usually Tyvex), and protective headwear with a splash shield.

- Leather gloves and leather boots are not adequate PPE for wastewater system employees. Leather is easily contaminated and cannot be cleaned; discard leather gloves and boots if they have been exposed to raw sewage.

- Maintain adequate PPE supplies for each responding crew. Replace PPE as necessary during cleanup operations to ensure employee protection. Place used PPE into sealed bags for decontamination or disposal at a later time.

- In addition to adequate PPE supplies, each responding crew should be equipped with tools (shovels, rakes, pumps, hoses), damming materials (plugs, blocks, plastic sheeting, straw bales, sandbags), testing equipment, and decontamination chemicals (typically lime).

Recommendations to Limit and Control Exposures

- Plan response activities and operations to prevent or minimize storm water contact. Identify the sources of raw sewage and probable causes. Determine the best manner to contain and reduce the area of SSO contamination. Field crew supervisors are expected to use their best judgment in controlling SSO discharges.

- Immediately protect nearby drainage structures (ditches, channels, curbs, drop inlets, culverts, natural streams and ponds, detention basins, etc.), from receiving raw sewage to the greatest extent possible. Available materials to contain SSOs include: pipe plugs, plastic or wood blocks, sandbags, straw bales, plastic sheeting, or dirt berms.

- In instances with large flows, the responding crew may immediately choose to create dirt berms to control the SSO discharge. Or it can even be beneficial to use an existing storm water detention basin to contain

SSO discharges by plugging the detention outlet structure. The goals are to: 1) reduce exposure to humans, 2) protect property and the environment, and 3) reduce the extent of contaminated areas which need to be cleaned.

- Eliminate the SSO if possible by:
  - Directly removing blockages from the sanitary sewer line or manhole (if a blockage is clearly indicated).
  - Pumping sewage into a sewage tank trunk until the overflow stops, for later disposal at another sanitary sewer manhole or at wastewater treatment plant.
  - Pumping sewage downstream into the nearest downstream manhole at a location where the sanitary sewer line is properly functioning.

Cleanup and Decontamination

- After the SSO has been eliminated, then reclaim raw sewage from contaminated areas such as ground depressions, ditches, curb inlets, culverts, etc. Portable pumps and hoses can be used to collect raw sewage into sewage trucks. **Do not wash SSO discharges into the storm drainage system while cleaning SSO residues;** this is a violation of the City Storm Water and Street Ordinance and will be subject to penalties and other legal action.

- Remove **all** solid materials and residues that were discharged during an SSO. Solid materials include, but are not limited to: feces, toilet paper, personal hygiene products, napkins, food products, congealed grease or fat, soap residue, etc. Unfortunately, almost any type of material conceivable can be placed into the sanitary sewer system by the general public (limited only by size).

- Decontaminate areas with lime or other disinfectant as needed. Apply the correct amount of disinfectant. Do not allow disinfectant to enter ditches, storm drains, or natural streams. **Do not discharge lime into any flowing channels.**

- Important — Lime and other disinfectants are generally fatal to aquatic organisms, birds, pets, and other animals. Only use as much lime as needed. Prevent lime from entering ditches, storm drains, or flowing water. Field crews shall use their best judgment on the use and quantity of lime. Protection of human health is the highest priority.

- Contaminated areas with prolonged exposure to SSOs may need to be excavated, regraded, or replanted to fully repair SSO damage. Return site conditions so that human and animal contact with contaminated soils will not pose a health problem.

- Remove signs and barricades only after the contaminated areas are safe again for human contact.

Maintenance

- Wastewater system operators are required to maintain and repair sanitary sewer lines in a timely manner. SSO discharges are not allowable under NPDES permits, and must be prevented to the maximum extent possible.

- If the cause of an SSO discharge has compromised the ability of the sanitary sewer system to function, then the system should be repaired immediately to prevent a reoccurrence of the SSO.

References

170, 182, 195, 197 (see BMP Manual Chapter 10 for list)

Also, fecal coliform total maximum daily load (TMDL) reports (of which there are several written for streams Memphis and Shelby County), written by TDEC

ACTIVITY: Non-Storm-Water Discharges to Storm Drains | RH – 01

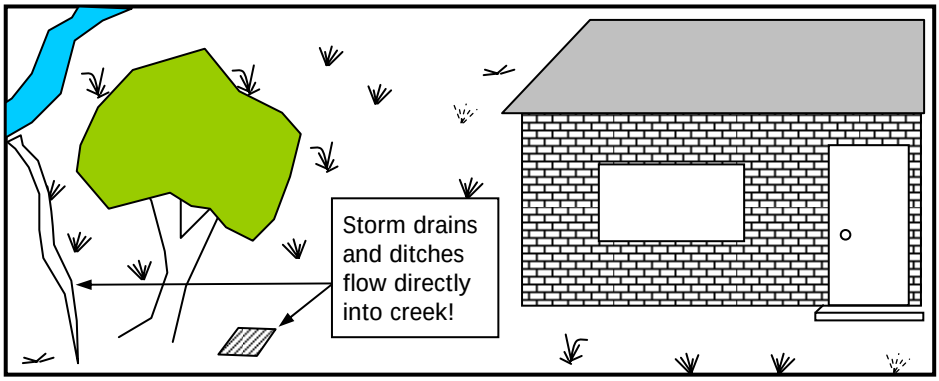

Targeted Constituents

● Significant Benefit ◗ Partial Benefit ○ Low or Unknown Benefit

● Sediment	● Heavy Metals	● Floatable Materials	● Oxygen Demanding Substances	
● Nutrients	● Toxic Materials	● Oil & Grease	● Bacteria & Viruses	◗ Construction Wastes

Description

Citizens, residents, and property owners in Memphis and Shelby County have the largest impact on the local streams and creeks. Most of the creeks, drainage channels, and storm water drains are located on private property. By eliminating pollution and protecting the quality of storm water runoff, our streams and creeks will again support fish and other wildlife. It is important to protect storm water quality since most city parks and recreation areas are located adjacent to streams and creeks.

Memphis and Shelby County are required by the Tennessee Department of Environment and Conservation (TDEC) to reduce various types of pollution. As part of the 1987 Clean Water Act, the National Pollutant Discharge Elimination System (NPDES) was created with enforcement rights assigned to state governments. TDEC issued NPDES permits to Memphis and Shelby County that require storm water quality data to be reported annually to TDEC.

Objective

Citizens, residents, and property owners must be aware that almost all discharges (solid or liquid) to a storm drain system, ditch, swale, creek, stream or curb inlet, or any ground surface that drains to a storm drain system are illegal and expressly prohibited. Contact the Storm Water Hotlines at 576-6721 (City of Memphis) or 545-3870 (Shelby County) to report illegal discharges, dumping, or storm water pollution Related BMPs include:

AM-01, Employee Training
Table AM-01-01, Quick Reference for Disposal Alternatives
IC-01, Non-Storm-Water Discharges to Storm Drains

Approach

The principal goal of this BMP is <u>to eliminate all substances (liquid or solid) that do not belong in storm water</u>. The current Memphis and Shelby County Storm Water Ordinances, links to which are included at www.stormwatermatters.com, specifically describe the allowable discharges into storm water; all other discharges are prohibited. Severe penalties and fines can be assessed for each incident. The following non-storm-water discharges are <u>allowable</u>:

(1) Potable water
(2) Potable water line flushing
(3) Air-conditioning condensate
(4) Discharges from emergency firefighting activities and exercises (a storm water pollution prevention plan should be prepared to address discharges or flows from firefighting only where such discharges are identified as significant sources of pollutants to waters of the United States)
(5) Uncontaminated water from crawl space, pumps or footing drains
(6) Lawn watering
(7) Residential car and boat washing
(8) Dechlorinated swimming pool water
(9) Materials placed as part of an approved habitat restoration or bank stabilization project
(10) Rising ground waters, uncontaminated ground water infiltration, uncontaminated pumped ground water, uncontaminated springs, diverted stream flows; riparian habitats and wetlands
(11) Flows from riparian habitats and wetlands
(12) Common practices for water well disinfections
(13) Discharges within the constraints of a National Pollutant Discharge Elimination System (NPDES) permit from the Tennessee Department of Environment and Conservation (TDEC)
(14) Unless otherwise prohibited by this ordinance, any discharge that could be made directly to waters of the state without a federal or state permits being required
(15) Dye testing in compliance with section 30-28(b)
(16) Other types of discharges as determined by the manager

(Order No. 292, § 30-109, 12-6-04)

<u>The following non-storm-water discharges are explicitly prohibited by Memphis and Shelby County Storm Water Ordinances.</u> The list of prohibited discharges is not all-inclusive since any type of discharge not specifically exempted (see list of 16 items above) is prohibited. In other words, these are only the more commonly observed violations.

(1) Trash or debris
(2) Construction materials
(3) Petroleum products including but not limited to oil, gasoline, grease, fuel oil, or hydraulic fluids
(4) Antifreeze and other automotive products
(5) Metals in either particulate or dissolved form
(6) Flammable or explosive materials
(7) Radioactive material
(8) Batteries, including but not limited to, lead acid automobile batteries, alkaline batteries, lithium batteries, or mercury batteries
(9) Acids, alkalis, or bases
(10) Paints, stains, resins, lacquers, or varnishes
(11) Degreasers and/or solvents
(12) Drain cleaners

(13) Pesticides, herbicides, or fertilizers
(14) Steam cleaning wastes
(15) Soaps, detergents, or ammonia
(16) Swimming pool backwash including chlorinated swimming pool discharge
(17) Chlorine, bromine, and other disinfectants
(18) Heated water
(19) Animal waste from commercial animal or feeder lot operations
(20) Any industrial and sanitary wastewater, including leaking sewers or connections
(21) Recreational vehicle waste
(22) Animal carcasses
(23) Food wastes
(24) Medical wastes
(25) Collected lawn clippings, leaves, branches, bark, and other fibrous materials
(26) Collected silt, sediment, or gravel
(27) Dyes, except as stated in subsection (b)
(28) Chemicals, not normally found in uncontaminated water
(29) Any hazardous material or waste, not listed above
(30) Washing of fresh concrete for cleaning and/or finishing purposes or to expose aggregates
(31) Junk motor vehicles, as defined in subsection (c)
(32) Liquid from solid waste disposal containers

Penalties for minor discharges that have no significant adverse impact on the safety, health, welfare of the environment, or the functionality of the county's storm water collection system may be waived at the discretion of the manager.

- Dye testing is allowed but requires verbal notification to the manager a minimum of 24 hours prior to the date of the test. The City of Memphis and Shelby County governmental agencies are exempt from this requirement.

- Junk motor vehicle means any vehicle that shall include by way of example, but not be limited to, the following vehicle types: automobiles, construction equipment, motorcycles, and trucks, and that meets all of the following requirements:

  - Is three years old or older
  - Is extensively damaged, such damage including, but not limited to any of the following: a broken window or windshield or missing wheels, engine or transmission
  - Is apparently inoperable
  - Is without a valid current registration
  - Has a fair market value equivalent only to the value of the scrap in it

(Order No. 292, § 30-108, 12-6-04)

References **30, 31, 33, 34, 35, Memphis and Shelby County Storm Water Ordinances** (see BMP Manual Chapter 10 for list)

ACTIVITY: Vehicle Washing	RH – 02

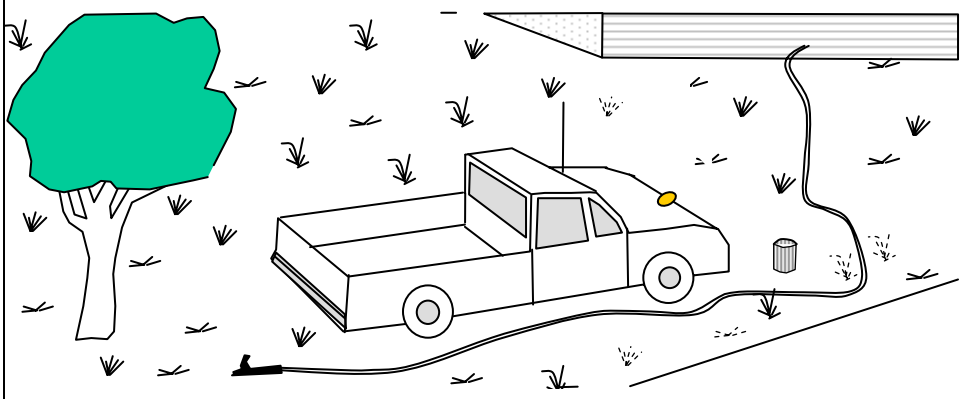

Targeted Constituents

● Significant Benefit	◗ Partial Benefit	○ Low or Unknown Benefit		
◗ Sediment	◗ Heavy Metals	○ Floatable Materials	◗ Oxygen Demanding Substances	
◗ Nutrients	◗ Toxic Materials	◗ Oil & Grease	○ Bacteria & Viruses	○ Construction Wastes

Description

Reduce pollutants from cars, trucks, and other personal vehicles in order to protect natural streams and creeks. Pollutants, such as detergents and dirty wash water, must always be prevented from directly discharging to streams, creeks, ditches, and storm drains. In addition, pollutants should be prevented from running off the land and impervious surfaces due to precipitation and storm water.

Approach

Washing personal vehicles (cars, trucks, vans, motorcycles) has a very high potential for polluting streets, storm drains, streams, creeks, wetlands, and other natural water bodies. Vehicles accumulate the various products and emissions generated by gasoline and diesel fuel combustion (particularly in the engine area and underneath the frame).

- Vehicles contain large amounts of fluids that leak slowly from the engine, or may escape from a rupture, or spill during a vehicle collision. Fluids such as engine oil, transmission fluid, radiator coolant, battery acids, and brake fluid all have special properties due to their chemical formulation. All of these fluids are poisonous to plants, trees, insects, wildlife, fish, etc., and must be reduced as much as possible.

- Vehicles contain moving parts that wear down. Small pieces of the tires are continually being worn down and left on streets and roadways. Brakes and brake pads are designed purposely to erode and grind in a way to minimize vehicle maintenance. Small pieces of the brake pads (containing asbestos and metals) are being worn down continually and deposited on streets and roadways.

- <u>Detergents are harmful to fish and other aquatic life.</u> Many cleaning substances are toxic to aquatic life and result in fish kills. Reduce or eliminate the use of detergents and cleaners while washing vehicles. Wash vehicles on lawns or grassy areas to reduce direct discharge of wash water to curbs, inlets, ditches, and other waterways.

Prohibition to Discharge

Due to federal mandates, Memphis and Shelby County have adopted Storm Water Ordinances to prohibit the discharge of chemicals and man-made materials into creeks, streams, ditches, swales, pipes, storm drains, and parts of the city drainage system. See the BMP entitled RH-01, Non-Storm-Water Discharges to Storm Drains, for a complete list of allowable discharges; anything else is strictly prohibited. This prohibition includes all types of automotive fluids, whether discharged directly into a stream or storm drain, or discharged indirectly upon the ground surface. In addition to fines and legal action from the City of Memphis and Shelby County, the state government through the Tennessee Department of Environment and Conservation can also assess severe penalties for polluting waters of the state (defined as any blue-line stream on a U.S. Geological Survey quadrangle topographic map) or any storm drainage system that leads to waters of the state.

Vehicle Washing

It is legal to discharge water when washing individual cars on residential property. This is one of the allowable discharges listed in RH-01 (Non-Storm-Water Discharges to Storm Drains) and also in the City of Memphis and Shelby County Storm Water Ordinances. It is also legal to discharge water when holding a carwash event over a period of two days or less for the purpose of charity, nonprofit fund-raising, or similar noncommercial purpose. However, it is illegal to discharge wash water or rinse water that adversely affects the water quality of a creek or stream, even if otherwise allowable according to ordinance.

It is suggested that city residents minimize the amount of soap and detergents that are used in wash water. Extremely dirty or grimy vehicles should generally be cleaned using a commercial carwash, which is required to treat all wash water and rinse water to certain standards. Some detergents and soaps may actually harm automotive paint and wax finishes to the degree that many vehicle manufacturers recommend washing with water only. Commercial carwashes generally mix a waxing agent in the rinse water that is beneficial to some automotive paints.

A carwash or commercial vehicle washing facility is strictly prohibited from discharging water into streams, creeks, ditches, pipes, culverts, or storm drains. This includes, but is not limited to: automobile dealers, automotive repair shops, industrial or commercial plants with vehicle washing stations, construction sites, or any location that is not a personal residence.

Residents may want to wash vehicles on lawns or other pervious ground surfaces, or at least direct the discharge of wash water and rinse water into grassy areas. Avoid discharging large amounts of chlorinated city water directly to storm drains or streams. Reduce the amount of chlorinated water by turning off the hose when not needed. Relatively small amounts of chlorinated water can be toxic to the fish and other aquatic organisms, especially during dry weather.

Detergents affect the gill membranes of fish and adversely affect other aquatic life. Minimize the use of detergents, and dispose of soapy water indoors in a sink or drain. Even phosphate-free, biodegradable soaps have been shown to

be toxic to fish before the soap degrades. Avoid the use of solvents and other toxic chemicals.

Do not wash engines, undercarriages, transmissions, or automotive parts near streams, creeks, storm drains, ditches, or impervious surfaces such as driveways and streets. Carefully control and dispose of engine wash water in a manner that does not pollute streams or the environment. Dirty engines and undercarriages should generally be cleaned at well-equipped commercial facilities to prevent pollution.

Related BMPs

Consult the following list of related BMPs for disposal options and other guidance:

Table AM-01-1	Quick Reference for Disposal Alternatives
AM-14	Vehicle and Equipment Cleaning
RH-01	Non-Storm-Water Discharges to Storm Drains
RH-03	Vehicle Maintenance and Repairs

References

30, 31, 33, 34, 35, 98, 99, 103, 113, 138 (see BMP Manual Chapter 10 for list)

ACTIVITY: Vehicle Maintenance and Repairs	RH – 03

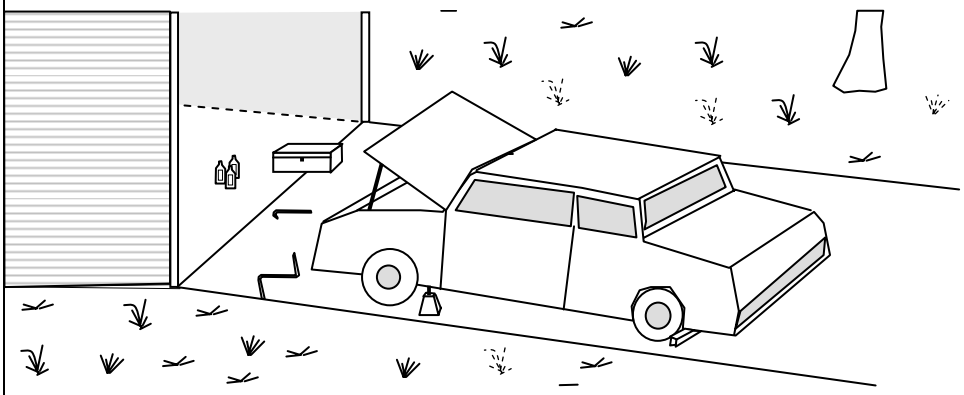

Targeted Constituents

● Significant Benefit ◗ Partial Benefit ○ Low or Unknown Benefit

◗ Sediment	● Heavy Metals	○ Floatable Materials	◗ Oxygen Demanding Substances	
○ Nutrients	● Toxic Materials	● Oil & Grease	○ Bacteria & Viruses	○ Construction Wastes

Description

Prevent pollutants and automotive fluids from directly discharging to streams, creeks, ditches, and storm drains. In addition, pollutants should be prevented from accumulating on impervious surfaces in order to improve storm water quality and protect natural streams and creeks.

Approach

Personal vehicles (cars, trucks, vans, motorcycles) have a very high potential for polluting streets, grassy areas, streams, creeks, and the air that we breathe.

- Vehicles contain large amounts of fluids that could leak slowly from the engine or may escape from a ruptured hose. Fluids such as engine oil, transmission fluid, radiator coolant, battery acids, and brake fluid all have special properties due to their chemical formulation. All of these fluids are poisonous to plants, trees, insects, wildlife, fish, etc., and must be reduced or eliminated as much as possible. Repair automotive leaks immediately.

- Incomplete combustion of gasoline and diesel fuels is a major contributor to air pollution. There is a high level of concern in state and federal governments for air quality and ozone levels in Memphis. Please keep personal vehicles in good condition to reduce air pollution. The state of Tennessee currently does not require statewide vehicle inspections or emission testing; however, the City of Memphis does require this testing.

- Vehicles contain moving parts that wear down, such as tires and brake pads. Brakes and brake pads are designed purposely to erode and grind in a way to minimize vehicle maintenance. Small pieces of tires and brake pads (containing asbestos and metals) are continually being deposited on streets and roadways.

Prohibition to Discharge

Due to federal mandates, Memphis and Shelby County have adopted Storm Water Ordinances to prohibit discharge of chemicals and man-made materials into creeks, streams, ditches, swales, pipes, storm drains, and any surface that drains into these waterways. See BMP RH-01,

Non-Storm-Water Discharges to Storm Drains, for a list of allowable discharges; anything else is strictly prohibited.

This prohibition includes all types of automotive fluids, whether discharged directly into a stream or storm drain, or discharged indirectly upon the ground so that the automotive fluid could wash away as storm water runoff at a later time. In addition to fines and legal action from Memphis and Shelby County, the state government Tennessee Department of Environment and Conservation (TDEC) can also assess severe penalties for polluting waters of the state (defined as any blue-line stream on a U.S. Geological Survey quadrangle topographic map) or any storm drainage system.

It is also illegal to discharge automotive fluids into a sinkhole, or to allow these fluids to soak into the ground. Sinkholes and known areas of groundwater recharge are also included as waters of the state, for which TDEC, the City of Memphis and Shelby County will assess penalties and take legal actions.

Disposal Options

Many automotive parts stores and repair shops will accept engine oil and other fluids for recycling. Ask about recycling when you purchase automotive parts and fluids. A comprehensive list of oil and fluids recycling locations is available through links at www.stormwatermatters.com. The recycling center and waste transfer station that accept used automotive fluids.

Vehicle Repairs

It is recommended that most city residents should take advantage of commercial repair shops and oil-change facilities. Home repair and maintenance may be performed if the home owner/resident has adequate knowledge and tools for the task, materials to control spills and leaks, and proper safeguards to properly protect natural streams, storm drains, drainage ditches, and the environment in general.

Purchase the correct automobile parts when making repairs or performing regular vehicle maintenance. Consult automotive repair manuals in order to perform the work quickly and efficiently. Use a funnel whenever pouring liquids such as motor oil, brake fluid, or coolant. Drain hoses prior to removing or adjusting them; in most cases the liquid can be reused. Drain pans and drop cloths are essential items when changing oil or other automotive fluids. Be sure to use some type of drain pan when unclipping hoses, unscrewing filters, or removing other parts. In general, use dry methods such as rags and absorbent material (kitty litter) to clean spills and leaks. Do not wash spills onto the ground or any surface that drains to the city storm water drainage system or to natural creeks and streams. Sweep or mop any spills or leaks promptly. Keep spill containment materials nearby.

Use nontoxic materials when possible. For instance, baking soda is used for cleaning battery terminals and clamps. Do not mix used motor oil with solvents. Do not mix chlorinated solvents with nonchlorinated solvents such as kerosene or mineral spirits.

Other Vehicle BMPs

The following Activities & Methods BMPs are applicable to everyone who operates or maintains a vehicle, including as businesses, industries, home owners, automotive dealers, repair shops, garages, etc. The BMPs contain many specific requirements and guidelines for care and maintenance of vehicles.

Table AM-01-1	Quick Reference for Disposal Alternatives
AM-07	Spill Prevention and Control
AM-08	Waste Management and Recycling
AM-15	Vehicle and Equipment Fueling
AM-16	Vehicle and Equipment Maintenance and Repair

References

19, 20, 22, 30, 31, 33, 34, 35, 43, 98, 99, 100, 103, 108, 113, 127, 138
(see BMP Manual Chapter 10 for list)

ACTIVITY: Landscape Irrigation and Lawn Watering

RH – 04

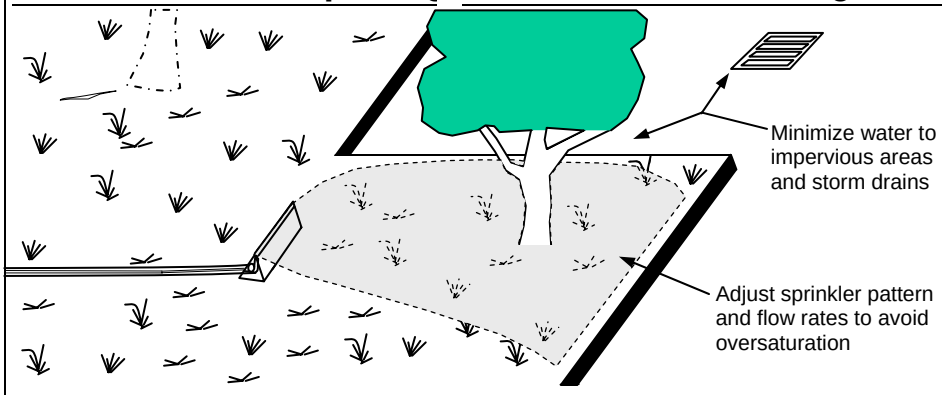

Targeted Constituents				
● Significant Benefit		◗ Partial Benefit	○ Low or Unknown Benefit	
○ Sediment	○ Heavy Metals	○ Floatable Materials	◗ Oxygen Demanding Substances	
● Nutrients	● Toxic Materials	○ Oil & Grease	○ Bacteria & Viruses	○ Construction Wastes

Description

Prevent or reduce the discharge of pollutants from sprinklers and landscaping water in order to protect natural streams and creeks. Runoff is reduced by decreasing the flow rate, by applying water in a more controlled manner, and by closely monitoring sprinklers.

Approach

During dry summer months in the Memphis area, it is not unusual to go a few weeks without rainfall. Many homes and businesses determine that watering lawns and other vegetation is a necessity. In addition to lawns and trees, water is needed for golf courses, flower and vegetable gardens, nurseries, and landscaped parking lot islands.

Pollution occurs when landscaping water produces runoff to the storm drainage system. Typical pollutants include herbicides, pesticides, fertilizers, and mulch. In addition, most watering is done with chlorinated utility water. Chlorinated water must not be discharged to creeks and streams because it kills aquatic life. Runoff from several overwatered lawns will kill fish and other aquatic organisms in a small creek. Overwatering is more likely to occur during the dry summer periods, which is when streams have lower flows and the chlorine dosages have more effect.

Due to federal mandates, Memphis and Shelby County adopted the Storm Water Ordinances to prohibit all discharges of chemicals, man-made materials, and soils (see RH-01, Non-Storm-Water Discharges to Storm Drains) into streets, ditches, storm drains, and natural streams. This prohibition includes chlorinated water, any soil or mulch, chemicals such as fertilizers and pesticides, and nutrients such as fertilizer and lime. In addition to being toxic, these substances also change the pH and turbidity of natural streams and creeks. Damage from toxic materials is not necessarily immediate but can take months or years to accumulate.

Guidelines

- Avoid discharging water onto impermeable surfaces such as paved driveways, roads, and parking lots. Direct water onto soil and lawns by using a correctly sized sprinkler with the right spray pattern. Sprinklers can be selected at a reasonable cost for round areas or long areas, with adjustable patterns, timers, and other settings.

- Do not use more water than the plants and soil can absorb. Slowly watering plants at a rate that allows water to soak into the soil is much healthier for vegetation. Excess water damages the lawn or landscaped area by washing away the nutrients and soil. Lower the flow rate and increase watering time as necessary to avoid discharging water to the storm water drainage system.

- Monitor watering activities and correct as necessary. Stop watering as soon as runoff leaves the landscaped area, which indicates saturated conditions. Adjust sprinklers to cover all areas evenly; use a variety of sprinkler patterns as needed.

- Do not leave watering activities unattended. Unfortunately, many businesses feel that sprinklers are best operated overnight when the establishment is closed. Watering will be effective for a few hours, but the ground usually becomes saturated by nightfall. Afterwards, the sprinkler system is ineffective and almost all of the chlorinated water goes directly to the storm water drainage system.

- Use herbicides, pesticides, and fertilizers responsibly in accordance with manufacturer's instructions. Do not overapply these hazardous materials; this would be the equivalent of pouring toxic chemicals directly into the natural streams and creeks. Herbicides and pesticides should be applied after rainfall or watering occurs, and a dry period of a few days is expected. Fertilizer and lime may be applied prior to light watering.

- Construct a small berm, depression area, or curb on the lower side of landscaped areas. Minor grading modifications can also be performed to allow excess water to collect and soak into the soil instead of being wasted in the storm drains. Use native trees and shrubs when possible; native vegetation is usually more resistant to drought than ornamental trees.

- If possible, avoid using chlorinated water for landscaping. Use rain barrels, cisterns, ponds, or other methods for capturing storm water. Or, allow chlorinated water to stand in an open container for a day or so, prior to being used for landscaping irrigation. Chlorine naturally escapes from chlorinated water as a gas at a rate that is subject to temperature, sunshine, and wind conditions. A simple swimming pool test kit can be used to detect chlorine. Once the dechlorination time has been established, further use of the chlorine test kit is usually not needed.

Maintenance

Monitor watering operations closely. Adjust watering rates and patterns to avoid runoff to storm drainage systems, curb inlets, ditches, natural creeks and streams, ponds, wetlands, etc. Repair damaged or incorrectly installed sprinklers. Repair leaking hoses and valves.

Limitations

- Extra effort and attention is required to monitor landscape watering. Sprinklers and other equipment should have the correct size and configuration to accomplish the intended purpose without overwatering.

- Berms, curbs, or other grading modifications will require additional space for ponding water. Berms and grading modifications may affect the symmetry of landscape designs in very minor ways.

Related BMPs

Other topics and aspects of landscape irrigation and lawn watering are included in these related BMPs:

AM-01	Employee Training — with a table for waste disposal alternatives
AM-13	Pesticides, Herbicides, and Fertilizer Use
ES-07	Mulch
ES-10	Trees, Shrubs, and Vines
RH-01	Non-Storm-Water Discharges to Storm Drains

References

32, 103 (see BMP Manual Chapter 10 for list)

ACTIVITY: Pesticides and Fertilizers	RH – 05

Targeted Constituents

● Significant Benefit ◗ Partial Benefit ○ Low or Unknown Benefit

○ Sediment	◗ Heavy Metals	○ Floatable Materials	● Oxygen Demanding Substances	
● Nutrients	● Toxic Materials	○ Oil & Grease	○ Bacteria & Viruses	○ Construction Wastes

Description

Use efficient and safe housekeeping practices (storage, use, and cleanup) when handling potentially harmful materials such as fertilizers, herbicides, and pesticides. Misuse and overuse leads to storm water pollution, poisons, and toxic substances in Memphis and Shelby County creeks and streams. Only use fertilizers and pesticides when necessary, and consider alternative methods and treatments if available.

Approach

Fertilizer management involves control of the rate, timing, and method of application to minimize the chance of polluting surface water or groundwater. Pesticide and herbicide management involves eliminating excessive pesticide use, using proper application procedures, and considering alternatives to chemical control to reduce the amount of pesticides and herbicides in storm water runoff.

The use of fertilizers, herbicides, and pesticides contributes to pollution of storm water runoff. Residential users of these products tend to overapply by a factor of several times. Carefully read the instructions for application rates, recommended application equipment, and seasonal methods. See AM-13, Pesticides, Herbicides, and Fertilizer Use, for additional considerations and application instructions for various types of materials such as dusts, sprays, granular formulations, and fumigants.

In many cases, these products may not be essential for a productive lawn or garden. Selection of low-maintenance vegetation reduces the need for fertilizers, pesticides, and herbicides. University of Tennessee Agricultural Extension Service has many brochures and pamphlets concerning fertilizers and pesticides, including various environment-friendly alternatives. These pamphlets are available at the Agricenter or online at: http://www.utextension.utk.edu/publications/.

More information on pesticides is available from the U.S. Environmental Protection Agency Office of Prevention, Pesticides & Toxic Substances: http://www.epa.gov/opptsmnt/.

Fertilizers

- Do not apply fertilizer when immediate rainfall is expected. Apply fertilizer only when there is already adequate soil moisture and little likelihood of immediate heavy rainfall. After applying fertilizer, lightly sprinkle the lawn or garden. A soil test is recommended to determine the optimum lime and fertilizer application rates.

Pesticides and Herbicides

- Excessive application and misuse of pesticides and herbicides results in heavily polluted storm water runoff. Avoid using pesticides and herbicides when immediate rainfall is expected. Apply pesticides and herbicides in a narrow rather than wide band; do not broadcast them over the entire lawn area. Spot-spray infested areas. Never apply pesticides and herbicides near streams, creeks, ditches, storm drains, or on impervious surfaces.

- Examine all alternatives to pesticides and herbicides that, in the long term, may be much less costly than the use of a particular chemical. Use the least toxic chemical pesticide or herbicide that will accomplish the purpose. Pesticides and herbicides that degrade rapidly are less likely to become storm water runoff pollutants. Use pesticides and herbicides with low water solubility. Granular formulations are generally preferable to liquids because application losses are lower.

- Pesticides and herbicides should be sprayed only when wind speeds are less than 7 mph. Spray in the early morning or at dusk when wind speeds are usually lowest. Air temperature should range between 40 degrees to 80 degrees Fahrenheit.

Pesticide and Herbicide Types

- Dusts: This type is highly susceptible to wind drift, not only when being applied but also after reaching target. The application should be performed during the early morning or late evening hours when there is little or no air movement. The distance between the application equipment and the target should be minimized.

- Sprays: This type may be in the form of solutions, emulsions, or suspensions. Droplet size is an important factor in determining susceptibility to wind drift. Large droplets fall faster and are less likely to contaminate nontarget areas. Sprays should be applied during periods of low air movement. Ground sprays followed by soil incorporation are not likely to be sources of water pollution unless excessive erosion occurs.

- Granular formulations: This type is applied to either the ground surface or below the soil surface. Surface applications may or may not be followed by soil incorporation. Pollution of surface waters from granular formulations is unlikely unless heavy runoff or erosion occurs soon after treatment. However, groundwater pollution may result from excessive leaching due to

rainfall after application, depending on the pesticide composition. Loss of granular formulations can be controlled for the most part with adequate soil conservation practices.

- Fumigants: This type must be kept in place for specific lengths of time in order to be effective. Containment methods include soil compaction, water seal, and sealing of the area with a plastic cover. Most fumigants act rapidly and degrade quickly. Consequently, water pollution is usually not a problem.

- Antimicrobial paints and other surface coatings: This type is designed to resist weathering and is therefore not a likely source of pollution. Empty containers should be disposed in accordance with rules for all pesticide containers. Use extreme care when sanding or scraping surfaces that have been previously treated with these substances. Treat sanded and scraped residue as hazardous waste.

- Preplant treatments: Seed, roots, tubers, etc., are frequently treated with pesticides prior to planting. Treatment is usually by dust, slurry, or liquids. Little pollution hazard exists from this application. Care must be taken, however, in disposing of residual treatment materials and with unused plants.

- Organic pesticides: A wide variety of organic pesticides, produced from plants, bacteria, and other naturally occurring substances, are available in quantities for both commercial and residential use. These substances usually present much less risk for contamination of groundwater and surface water, and fewer problems for disposal of leftover product or containers.

- Beneficial insects: This management method involves the use of insects in bulk or in amounts suitable for residential use. It can be used alone or in combination with other pesticides to eliminate or minimize the use of toxic substances.

Good Housekeeping and Safety

- Always use caution when handling any pesticide, herbicide, or fertilizer product. Many products contain toxic chemicals that cause severe injury or death. Keep pesticide or fertilizer products securely in containers protected from storm water and away from children, pets, and sources of heat, sparks, and flames. Store products in their original containers and keep clearly labeled. Do not store chemicals in food containers.

- Read and follow use instructions provided on packaging, and in material safety data sheets (MSDS) if available. Periodically review for handling pesticides, herbicides, or fertilizers. Work only in well-ventilated areas. Avoid contact with eyes and skin. Wear gloves and eye protection when using or handling hazardous substances. Do not wear contact lenses, which can absorb hazardous vapors.

Disposal Options

Consult Table AM-01-1 for a quick reference on disposal alternatives. Questions on household hazardous waste should be directed to the Shelby County Environmental Programs Coordinator at 379-4410.

In general, use the entire product before disposing of the container. However, do not overapply the product. Do not dispose of pesticide or fertilizer wastes in any of the following methods:

- Into trash or waste containers
- Into storm drains or into creeks
- Onto the ground
- By burning

Related BMPs

These related BMPs also provide guidance on the correct use and disposal of fertilizers and pesticides:

Table AM-01-01	Quick Reference for Disposal Alternatives
AM-08	Waste Management and Recycling
AM-13	Pesticides, Herbicides, and Fertilizer Use

References

18, 32, 33, 34, 35, 52, 53, 92, 93, 96, 97, 166 (see BMP Manual Chapter 10 for list)

ACTIVITY: Household Solid and Hazardous Waste Management	RH – 06

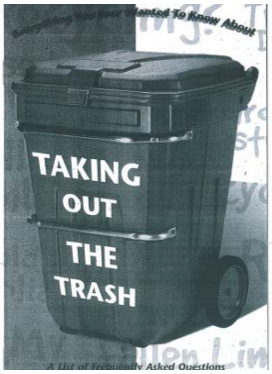

Targeted Constituents

● Significant Benefit ◗ Partial Benefit ○ Low or Unknown Benefit

○ Sediment	● Heavy Metals	○ Floatable Materials	◗ Oxygen Demanding Substances	
○ Nutrients	● Toxic Materials	● Oil & Grease	○ Bacteria & Viruses	○ Construction Wastes

Description

Prevent or reduce the discharge of pollutants to the storm water system or natural streams by effective management of waste materials. Primary approaches include educating of the public, proper material use, source reduction tracking waste generation and disposal, proper material storage, recycling, preventing storm water contact and runoff from waste management areas, and good waste disposal procedures.

Proper recycling is greatly encouraged by Memphis and Shelby County in order to reduce the amount of landfilled waste. Effective waste management and recycling is likely to create a significant reduction in the manner and volume of pollution that enters the city storm drainage system and natural channels.

Household hazardous waste must not be placed in the weekly curbside garbage containers or dumpsters. It is illegal to allow non-storm-water discharges to ditches, swales, curbs, storm drains, or natural creeks.

For a quick reference on disposal alternative for common household wastes, see Table AM-01-1, which is part of the Employee Training BMP fact sheet.

Consult the City of Memphis at 576-6508 or BFI at 794-3800 for the types of materials that are accepted at the Solid Waste Management Facility. In addition, contact the Shelby County Environmental Program Coordinator at 379-4410 for information about Household Hazardous Waste Collection.

Household Hazardous Wastes

A typical home contains many hazardous chemicals commonly used for cleaning, repairs, construction, automobile maintenance, lawn care, or hobbies. Often, household hazardous waste will accumulate on shelves in the garage or basement. The basic definition for a household hazardous substance is that it is toxic, poisonous, corrosive, chemically reactive, flammable, or combustible.

Some examples of household hazardous waste include:

- Adhesives
- Ammonia or bleach
- Anti-freeze
- Automotive fluids
- Batteries
- Cleaning fluids
- Detergents
- Disinfectants
- Herbicides
- Motor oil
- Oven cleaner
- Paint
- Paint thinner/remover
- Pesticides
- Solvents
- Toilet cleaner
- Wood stains and preservatives
- Fluorescent tubes and lights

Due to poisons and toxic substances, household hazardous waste should not be included in the ordinary weekly garbage collection that is collected curbside. Whenever possible, purchase nontoxic and biodegradable products. Or use natural cleaning solutions such as vinegar or lye soap. Always follow the directions on the product label, and clean up any spills immediately. In general, do not purchase more of a hazardous product than can be reasonably used.

Prohibition To Discharge

Due to federal mandates, Memphis and Shelby County have adopted a Storm Water and Street Ordinance to prohibit discharge of all chemicals and man-made materials into creeks, streams, ditches, swales, pipes, storm drains, and any surface that drains into these waterways. See BMP RH-01, Non-Storm-Water Discharges to Storm Drains, for a list of allowable discharges; anything else is strictly prohibited. This prohibition includes all types of fluids, whether discharged directly into a stream or storm drain, or discharged indirectly upon the ground. In addition to fines and legal action from the City of Memphis and Shelby County, the state government (Tennessee Department of Environment and Conservation) can also assess severe penalties for polluting waters of the state (defined as any blue-line stream on a U.S. Geological Survey quadrangle topographic map).

Solid Waste Disposal Guidelines

Residential waste disposal must follow these guidelines:

- No liquids may be placed in garbage carts.
- Ensure all wastes placed inside garbage carts are in closed plastic bags.
- Garbage carts must be routinely cleaned out.
- Yard wastes must be bagged. In no case may grass or leaves be blown or swept into the storm drainage system or into streets and roadways because such activity could cause flooding.

Recycling

The City of Memphis and Shelby County promote recycling whenever possible and offer curbside recycling.

Related BMPs

These BMPs have additional information about waste disposal and alternatives:

Table AM-01-1	Quick Reference for Disposal Alternatives
AM-07	Spill Prevention and Control
AM-08	Waste Management and Recycling
RH-01	Non-Storm-Water Discharges to Storm Drains

ACTIVITY: Sanitary Sewer Laterals and Septic Tanks	RH – 07

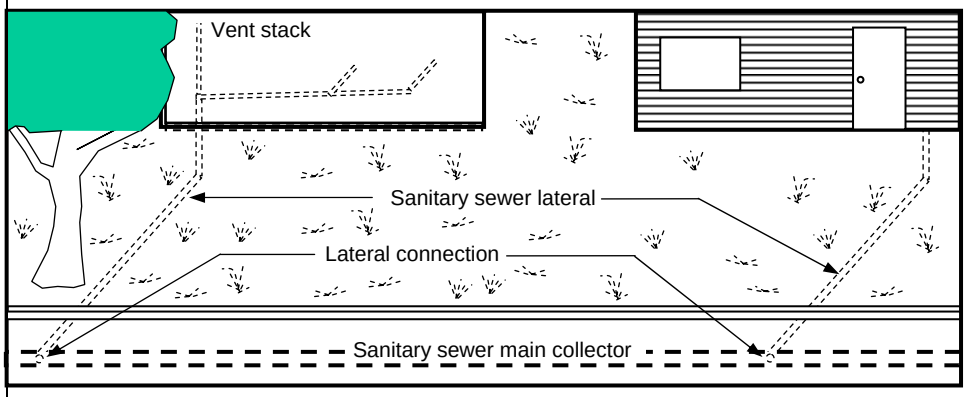

Targeted Constituents

● Significant Benefit ◗ Partial Benefit ○ Low or Unknown Benefit

○ Sediment	○ Heavy Metals	○ Floatable Materials	● Oxygen Demanding Substances	
● Nutrients	○ Toxic Materials	○ Oil & Grease	● Bacteria & Viruses	○ Construction Wastes

Description

Prevent the discharge of pollutants from sanitary sewer laterals and from septic tank systems. Property owners are responsible for the inspection, maintenance, and repairs to the sanitary sewer laterals up to the connection with a sanitary sewer collector pipe. Property owners are responsible for maintenance and repairs to septic tank systems and associated drain fields.

Approach

The definition of sanitary and septic waste includes, but is not limited to, the following items:

- Human wastes
- Wastewater from toilets, sinks, dishwashers, washing machines, and other indoor plumbing fixtures
- Wastewater from kitchens and restaurants
- Wastewater from industries and commercial establishments

These types of wastes, as well as animal and pet wastes, carry harmful viruses and bacteria that spread disease. It is important to prevent direct and indirect human contact with these types of waste flows. Sanitary sewers are a vital part of American civilization and of the community health system but are seldom appreciated, noticed, or maintained.

Within Memphis and Shelby County, most waste flows are discharged into sanitary sewers that discharge to the City of Memphis waste water treatment plants.

All new development and redevelopment must be connected to a sanitary sewer system that fully treats the sewage in accordance with applicable federal and state standards for discharged effluent. Industrial plants, hospitals or nursing homes, and educational institutions may choose to construct and operate wastewater treatment plants on private property, if a National Pollutant Discharge Elimination System (NPDES) discharge permit has been obtained from Tennessee Department of Environment and Conservation (TDEC).

Sanitary Laterals

At a minimum, property owners should be aware of where sanitary sewer laterals are found on the property. Do not allow heavy vehicles or construction equipment to drive on top of sanitary sewer laterals. Do not plant large trees directly over or near sanitary sewer laterals. Large tree roots can infiltrate and eventually break a sanitary sewer lateral so that it will not function.

Inspection and Investigation

- The following guidelines are helpful for inspecting and maintaining sanitary sewer laterals. These guidelines will help the property owner to protect a valuable utility asset and will help to improve water quality in Memphis creeks and streams.

  — Find location of sanitary sewer laterals on the property.
  — Find location of sanitary sewer lateral connection to the main sewer.
  — Determine approximate date of construction and materials used.
  — Inspect lateral locations regularly for unusual odor or ground wetness.
  — Inspect lateral locations regularly for subsidence or unusual soil color.

- A leaking sanitary sewer lateral may be contributing flow to a nearby storm drain, ditch, or creek. Inspect the nearest storm drain or ditch during dry weather to determine if there is a suspicious flow. Contact the Storm Water Hotlines at 576-6721 (City of Memphis) or 545-3870 (Shelby County) to report illicit discharges, spills, leaks, or suspicious sanitary sewer discharges that need to be investigated. Anonymous reports are also investigated.

Other Considerations

- All temporary and permanent connections to the municipal sanitary sewer system must be inspected and approved by the City of Memphis prior to installation. Contact the Memphis Sanitary Sewer Department at 576-4300 for construction procedures and testing requirements. Only use licensed plumbing contractors with adequate experience and equipment for each project.

- Older houses throughout Memphis and Shelby County may have cross connections where a sanitary sewer line discharges into a storm drain. There are many reasons that this may have occurred, including:

  — A building contractor honestly may have misidentified the connection pipe.
  — A building contractor may have taken a shortcut to save time and money.
  — The storm drain contractor may have misidentified the sanitary sewer pipe.

- When found, cross connections must be replaced and repaired to function correctly. See IC-01, Non-Storm-Water Discharges to Storm Drains, for additional information on locating illicit discharges and cross connections. Smoke testing and dye testing are two common methods for locating leaks in the main sanitary sewer system.

Septic Tank Systems

- Do not install an onsite disposal system (such as a septic tank) within the city limits. Septic tanks are not allowed in the City of Memphis and Shelby County, unless no municipal sanitary sewer connections are available and sufficient hardship exists to warrant a variance. Approval must be obtained from the Shelby County Health Department. A septic system must be designed by a professional engineer and located on a site development plan.

- Existing privately owned septic systems must be maintained in good working order. If a private septic system fails to function properly, then the owner may be required to hook into the municipal sanitary sewer system at his cost. Typically, a septic tank needs to be inspected every year and pumped out every three years.

- Septic systems are not designed to process large volumes of water in short time periods. Do not wash several loads of clothes consecutively and do not use excessive amounts of detergents that contain phosphorus. Do not pour household chemicals down the drain into a septic system; chemicals can kill the good microbes within the septic tank. Garbage disposals contribute to an overloading of solids in the septic tank, requiring more frequent cleanouts.

- Keep heavy equipment and vehicles away from septic tank and septic drain field. Do not compact soils in the septic field. Do not pave over the septic drain field. Adequate aeration and evaporation in drain field must occur for proper treatment.

- Inspect the septic tank and septic drain field regularly to verify that sanitary and septic waste is not being discharged inadvertently. Inspection is normally done during dry weather to determine whether a discharge occurs. See IC-01, Non-Storm-Water Discharges to Storm Drains, for methods to detect illicit discharges and leaks. Look for unusual odors, wet ground, discolored soil, subsidence, or unusual settlement.

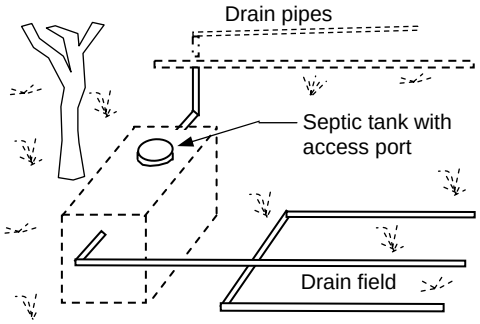

Safety Concerns

- Be careful investigating sanitary sewer lines or other confined spaces where sewer gases may exist. Sanitary sewer gases can render a person unconscious before being detected by normal senses. There are

many instances of people being killed by falling unconscious into an open man-hole due to sewer gases.

- Methane gas, along with other sewer gases, is very explosive. Keep sparks and open flames away from sewers, manholes, and septic tanks. Do not smoke near open manholes.

Related BMPs

AM-09	Sanitary and Septic Waste Management
IC-01	Non-Storm-Water Discharges to Storm Drains

References **137, 138** (see BMP Manual Chapter 10 for list)

ACTIVITY: Pet and Animal Wastes	RH – 08

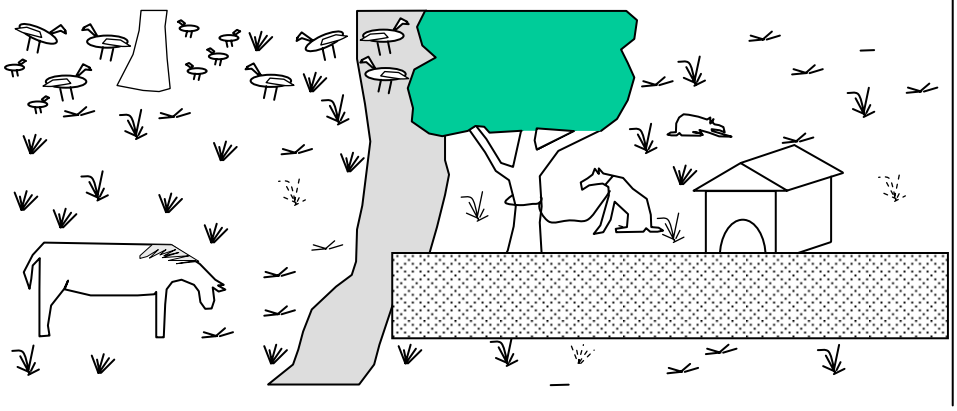

Targeted Constituents

● Significant Benefit ◗ Partial Benefit ○ Low or Unknown Benefit

○ Sediment	○ Heavy Metals	○ Floatable Materials	◗ Oxygen Demanding Substances	
● Nutrients	○ Toxic Materials	○ Oil & Grease	● Bacteria & Viruses	○ Construction Wastes

Description

Prevent animal and pet wastes in or near natural streams and creeks, storm drains, ditches, swales, or other types of storm water conveyance systems. This will reduce the amount of bacteria (particularly fecal coliform), which has been cited as the most serious contaminant for several creeks within the City of Memphis and Shelby County.

Approach

The Tennessee Department of Environment and Conversation (TDEC) has issued reports for several creeks within the City of Memphis and Shelby County. The reports state that the level of fecal coliform exceeds the computed Total Maximum Daily Loads (TMDLs) for the Wolf and Loosahatchie rivers and Nonconnah, Fletcher, Johns, Cypress, and Big creeks. Some example reports included for reference are:

- Total Maximum Daily Load (TMDL) Report for Fecal Coliform on Johns Creek, Cypress Creek South, Lower Nonconnah and Nonconnah Creek segments — (effective September 20, 2001)
- Total Maximum Daily Load (TMDL) Report for Fecal Coliform on Wolf River, Fletcher Creek, Cypress Creek — (effective June 30, 2003)
- Total Maximum Daily Load (TMDL) Report for Fecal Coliform on Cypress Creek and Big Creek — (effective September 12, 2003)

Sources of fecal coliform include animals (such as pets, cattle, wild birds) and humans (failing sewers, improper disposal of food products). This BMP addresses animal wastes (domestic and wild), which are a significant source of water pollution. Due to fecal coliform, some Memphis creeks are posted as unsafe for human contact. Animal waste may also contain other types of bacteria, viruses, and parasites.

When animal waste enters a natural creek, it uses the available dissolved oxygen to create ammonia. The combination of low oxygen, ammonia, and warm temperatures is detrimental to the fish and other aquatic life.

Animal waste contains nutrients that promote excessive weed and algae growth (eutrophication). Nutrients can make water cloudy and green, which further inhibits aquatic life and decreases the available dissolved oxygen.

Due to federal mandates, the City of Memphis and Shelby County adopted Storm Water Ordinances to prohibit and reduce pollution (see IC-01, Non-Storm-Water Discharges to Storm Drains, for a complete list) into streets, ditches, storm drains, and natural streams. This prohibition specifically includes animal wastes; see the following sections of the Storm Water and Street Ordinance for more details.

Guidelines

Pets

Pets can be a very significant source of fecal coliform. A 1982 study of urban watersheds in Baltimore, Maryland, found that dog feces were the single greatest contributor of fecal coliform and fecal strep bacteria (reference 190). A single gram of dog feces can contain 23 million fecal coliform bacteria (reference 199). Dogs can also be hosts for giardia and salmonella, two common types of harmful bacteria (reference 191).

- Provide a buffer zone and/or a fence to prevent animals from urinating or defecating into a creek, stream, or other storm water drainage feature. Do not keep pets immediately adjacent to ditches, swales, storm drains, pipes, or culverts.

- Clean up yards or fields that contain pet wastes on a regular basis. Animal waste can be sent to the sanitary landfill as part of the regular weekly garbage pickup. Burying animal waste away from ditches or storm water channels is also an acceptable option.

- Cat litter can be sent to the sanitary landfill as part of the regular weekly garbage pickup. Burying cat litter away from ditches or storm water channels is also an acceptable option, . Dumping used cat litter in piles on the ground surface is not an environmentally approved practice.

- When walking dogs, properly dispose of dog feces. Walk dogs in vegetated areas away from streams, creeks, ditches, and drainage channels. Disposal options are:

  - Scoop up pet waste and flush down the toilet.
  - Seal pet waste in a plastic bag and throw it in the garbage.
  - Bury pet waste in the yard (at least 6 inches deep) so it decomposes.
  - Add small quantities of pet waste to a compost pile; mix well. Make sure that pet waste is completely decomposed before using compost for gardens.

- It is <u>mandatory</u> for the owner or custodian of any pet to remove solid pet waste from all areas within the city (City Code of Ordinances, Section 5-63) and county (County Code of Ordinances, Section 3-40 [d] [2]).

Pastures/Farm Animals/Wildlife

- Provide a buffer zone and/or a fence to prevent livestock from urinating or defecating into a creek, stream, or other storm water drainage feature. Do not keep animals immediately adjacent to ditches, swales, storm drains, pipes, or culverts.

- If it is necessary for pasture animals to cross a stream or creek, limit the access as much as possible. Discourage livestock from standing in a stream or creek by limiting shade.

- Clean up pastures, fields, yards, and other open areas that contain animal wastes on a regular basis. Keep compost piles and manure piles as far away from ditches or storm water channels as possible. Burying animal waste is an acceptable alternative.

- Do not encourage ducks, geese, and other wild birds by feeding birds next to creeks, streams, and ponds. Duck and geese waste products are particularly harmful to water quality for creeks and streams. Ponds with regular populations of ducks and geese may need additional water quality treatment, such as sand filtration units.

References **32, 103, 190, 191, 199** (see BMP Manual Chapter 10 for list)
Final TMDL reports issued by TDEC http://www.epa.gov/owow/tmdl/

ACTIVITY: Slope and Stream Bank Stabilization	RH – 09

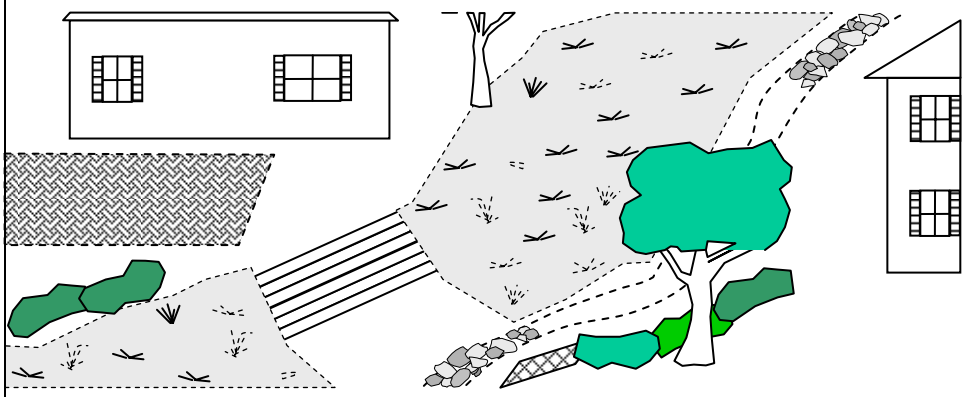

Targeted Constituents

● Significant Benefit ◗ Partial Benefit ○ Low or Unknown Benefit

● Sediment	○ Heavy Metals	◗ Floatable Materials	○ Oxygen Demanding Substances	
● Nutrients	○ Toxic Materials	○ Oil & Grease	○ Bacteria & Viruses	○ Construction Wastes

Description

Stabilize eroding slopes and stream banks in order to protect ditches, swales, storm drains, creeks, lakes and natural waterways. Slope stabilization improves the appearance of private property and will substantially reduce sedimentation and flood damage. Stream bank stabilization may require a permit from the Tennessee Department of Environment and Conservation (TDEC) prior to grading; see the TDEC Web site for more information. http://www.state.tn.us/environment/permits/

Approach

Home and private property owners can make a big difference in controlling erosion and sediment. The benefits of controlling erosion substantially outweigh the costs involved. Contrary to popular opinion, vegetation does not just grow by itself on disturbed areas and steep slopes. There is a large potential for eroding slopes wherever land is developed or landscaped in Memphis, due to hilly topography and native clay soils.

"Green" methods (with permanent vegetation) are the preferable means to fix steep slopes and erosion problems. Green methods help to capture rainfall, thus reducing the amount of runoff and flooding. Green methods are more attractive (and usually more durable) than structure stabilization methods such as gabion walls and riprap.

Overview of Slope Stabilization

First, determine the reason that a slope is unstable. If the slope tends to slide, collapse, or slough, the soil itself is unstable and typically needs a permanent solution. Possible remedies may include:

- Planting hardier and more durable types of vegetation (native trees and vines).
- Regrading the slope so that it is less steep.
- Constructing a retaining wall, crib wall, or other structural feature.

- Diverting surface water (and possibly groundwater) that tends to saturate soils and makes them heavier.

If a slope tends to erode or wash out in certain spots, the problem may be a combination of inadequate ground cover, poor drainage, no topsoil, wrong plants, etc. Possible remedies may include:

- Diverting surface water around the slope, if possible.
- Improving ground surface by adding topsoil, lime, fertilizer, mulch, or other soil amendments.
- Planting long grass, trees, shrubs, vines, or another type of ground cover. Select plants that meet sunlight, drainage, and maintenance requirements.

Green methods involving permanent vegetation are preferable to nongreen solutions. A common misconception is that gabions and riprap require less maintenance than green methods; this is not true. Gabions and riprap need to be inspected frequently for loose and misplaced stones, vegetation trimming and removal, settlement, etc. Green methods are more likely to be stable and self-maintaining. Specific aspects of slope stabilization are addressed in the following related BMPs:

Slope:	ES-04	Gradient Terraces and Silt Trenches
	ES-05	Surface Roughening
	ES-20	Bank Stabilization and Soil Bioengineering
	ES-23	Riprap (non-green solution)
	ES-28	Gabions (non-green solution)
Vegetation:	ES-06	Topsoil
	ES-07	Mulch
	ES-08	Seeding
	ES-09	Sodding
	ES-10	Trees, Shrubs, and Vines

Retaining walls, crib walls, and prefabricated structural walls must be designed by a professional engineer or other qualified expert for specific site conditions.

Overview of Stream Bank Stabilization

TDEC will require a property owner to obtain an Aquatic Resource Alteration Permit (ARAP) for any grading in or near waters of the state. Here are two quick definitions used to specify waters of the state:

- Memphis and Shelby County usually define this as a blue-line stream on a U.S. Geological Survey quadrangle map, or any point downstream from where a blue-line stream begins.
- TDEC typically defines a channel as carrying water for longer than one week after a heavy rainfall. The local TDEC office can send a field inspector to make difficult judgments when requested.

TDEC allows a property owner to clear downed trees and brush from a stream. The property owner should also unblock any culverts or pipes to prevent flooding. Live trees, shrubs, brush, and other vegetation (when

adjacent to a channel) are usually necessary to anchor and protect the stream banks. An ARAP is needed for any grading work near a stream that places or removes soil. See the TDEC stream bank Web site for further information on permits, channelization, stream bank protection, and allowable activities.

It is important not to alter the hydraulic stream cross sections. An ARAP is needed to relocate a channel, change the slope, or to provide channel linings such as concrete or riprap. Changing the channel hydraulics at one location (flow width, flow depth, velocity, channel roughness) will affect the channel hydraulics elsewhere. Specific aspects of stream bank stabilization are addressed in these related BMPs:

Stream bank:	ES-20	Bank Stabilization and Soil Bioengineering
	ES-22	Channel Linings

References **141, 155, 162, 167, 179, 180, TDEC Web site** (see BMP Manual Chapter 10 for list)

ACTIVITY: Swimming Pools and Spas	RH – 10

Targeted Constituents

● Significant Benefit ◗ Partial Benefit ○ Low or Unknown Benefit

○ Sediment	○ Heavy Metals	○ Floatable Materials	● Oxygen Demanding Substances	
○ Nutrients	● Toxic Materials	○ Oil & Grease	○ Bacteria & Viruses	○ Construction Wastes

Description

Chemical treatment of swimming pools and spas may prevent health concerns to bathers by killing organisms that live in the water. However, the chemicals that kill such organisms in pools and spas also kill aquatic life (fish, minnows, salamanders, crayfish) in creeks and streams that receive water with chemicals such as chlorine.

Approach

Since a variety of pool and spa treatment chemicals exists, it would be impossible to address proper disposal methods for every available chemical used in the treatment of pool and spa water. Due to federal mandates, Memphis and Shelby County adopted a Storm Water and Street Ordinance to prohibit discharge of non-storm-water materials (see RH-01, Non-Storm-Water Discharges to Storm Drains) such as chlorine, Baquacil, and other treatment chemicals into streets, ditches, storm drains, and natural streams.

The most common pool treatment is chlorine, which dissolves in water and is then very slowly released to the atmosphere as chlorine gas. This process is usually inhibited by the addition of other chemicals. Bromine is another type of pool chemical that is also commonly used. There are a variety of chemical products frequently used to reduce algae growth, adjust pH, remove hardness or metals, remove stains, etc. Memphis swimming pool and spa owners should use pool testing kits to monitor water conditions, and choose environmentally friendly products if available.

Swimming pool water will naturally release chlorine gas at a rate that is dependent upon water and air temperature, presence of chemical inhibitors, amount of sunlight, amount of wind, water depth, and circulation, etc. The process typically takes many days and requires that water should be periodically tested to monitor chlorine levels.

Reducing or Eliminating Discharges

- Before buying chemicals, select a method of pool treatment that has been successfully used in the Memphis area. Investigate and compare products to ensure that a proven method is selected. Select a method with the

least toxic chemicals or chemicals that can be easily neutralized and removed from water.

- Retailers and manufacturers must make information readily available to customers, such as material safety data sheets (MSDS), with each chemical product to cover proper use of chemicals, safety issues, and safe disposal methods. All users of pool and spa chemicals should verify that the discharge and disposal process for any water treated with chemical products will be able to comply with federal and state regulations in addition to the manufacturer's recommendation.

- Do not overfill swimming pools and spas so that water is discharged with every splash and wave. Allow adequate freeboard for rainfall and storms. Splashes and waves should drain to a grassy area for ground infiltration.

- Most in-ground pool owners do not choose to drain the pool each year. Due to high groundwater in the Memphis area, it is often beneficial to leave an adequate weight of water for in-ground swimming pool or spa to prevent cracking or uplift.

Recommended Disposal Alternatives

- Any swimming pool or spa water that has been treated by chlorine only and dechlorinated may then be discharged to grassy yards, streets, or the storm water system. Before discharging dechlorinated pool or spa water, check the water with a pool test kit to verify that it is completely dechlorinated. Dechlorinated discharges to streets and driveways should only occur in dry weather when it will not contribute to flooding for neighbors who live downstream. Do not discharge water during winter months for safety reasons if there is a potential for water freezing in the streets, curbs, and gutters.

- Any swimming pool or spa water that has been treated by chemicals other than chlorine is expressly prohibited from discharge to the storm drain system, even if the chemical has been neutralized. Disposal options include: 1) discharging to the sanitary sewer system, 2) drain pool and spa water at a very slow rate to grassy yards where the water will soak into the ground, or 3) construct an infiltration well or trench to allow water to soak into ground. A typical disposal method is to connect a hose from swimming pool to the sanitary sewer system. Connection to the sanitary sewer system must be approved by the City of Memphis prior to performing work. Do not discharge water onto or through neighbor's yard or property.

- Back wash water cannot be discharged directly to the storm water system unless it is completely dechlorinated and not treated with any other chemicals. Typical disposal method for back wash is to connect back wash hose from swimming pool or spa to the sanitary sewer system using a licensed plumbing contractor to install backflow prevention devices. Connections to sanitary system must be approved by the City of Memphis

prior to installation. An alternate disposal method for back wash is to construct an infiltration well or trench as described in ST-03.

Limitations Disposal methods that comply with the Memphis and Shelby County Storm Water Ordinances may not necessarily comply with federal, state, and county regulations. Resolve compliance issues prior to discharging water from swimming pool or spa.

References **30, 31, 32, vendor information** (see BMP Manual Chapter 10 for list)

ACTIVITY: Boating and Marinas	RH – 11

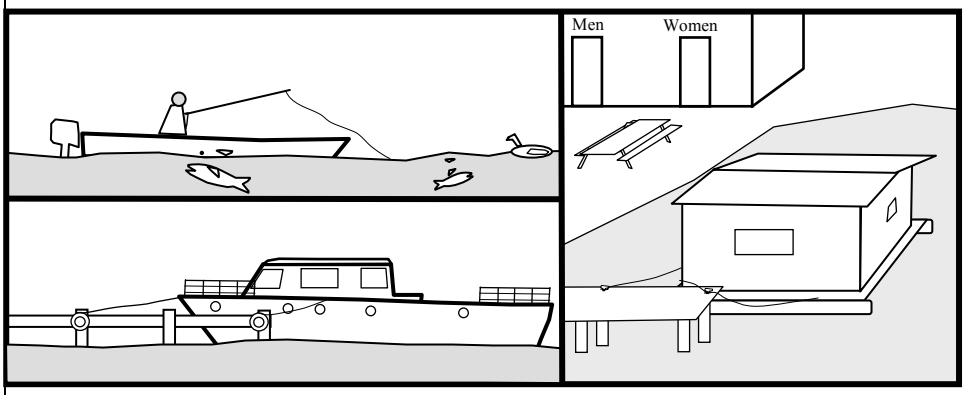

Targeted Constituents

● Significant Benefit ◗ Partial Benefit ○ Low or Unknown Benefit

○ Sediment	◗ Heavy Metals	● Floatable Materials	● Oxygen Demanding Substances	
● Nutrients	◗ Toxic Materials	◗ Oil & Grease	● Bacteria & Viruses	○ Construction Wastes

Description

Prevent or reduce the discharge of pollutants to rivers, lakes, and streams by properly disposing of wastes, minimizing repairs and maintenance, cleaning up spills and wastes immediately, and improving boating equipment and methods. Protect our natural resources and environment by following guidelines from the National Clean Boating Campaign. Use common sense to protect the water quality of Memphis lakes and rivers.

Approach

Federal, state, and municipal regulations prohibit the discharge of any waste or litter into the storm water system. Therefore, polluters may be penalized or arrested by any government entity authorized to enforce federal, state, or municipal laws. **It is illegal to discharge raw sewage from a vessel within U.S. territorial waters.**

In addition to government agencies and authorities, fishing organizations and tournaments promote responsible boating and care for the environment. Public education is supported by the Tennessee Valley Authority (TVA) through participation in the National Clean Boating Campaign. Brochures and fact sheets for sewage pumpout, fueling, bilge water, litter, and boat maintenance are available at http://www.cleanboating.com/research/boatingpublic.html.

Marina owners and operators are encouraged to join TVA's Clean Marina Initiative by meeting the minimum standards of the Tennessee Valley Clean Marina Guidebook (reference 198); see http://www.tva.com/environment/water/boating.htm for this document. Marinas that are in compliance with TVA's voluntary program can display the Clean Marina logo and flag. Some marinas are eligible to receive public funds in order to construct pumpout stations for use by the general public.

Boating Activities

Boat Sewage and Pumpouts

- Properly dispose of domestic and sanitary wastewater by using holding tanks. Empty holding tanks at approved wastewater collection

facilities at marinas and boat yards. Verify ballast water is clean before discharging to natural body of water. Remove or permanently lock Y-valve on holding tanks to prevent accidental discharge of untreated sewage to lakes, rivers, and streams. Comply with all laws regarding use and maintenance of a marine sanitation device (MSD). Guidelines and regulations are summarized on a Coast Guard Web site (http://www.uscg.mil/hq/g-m/mse/msd.htm).

- In general, the use of onshore restrooms is preferable to using restrooms on a boat. Minimize the use of onboard facilities by using onshore restrooms when docked. Make restroom stops every few hours as needed. Plan for restroom stops at marinas, fueling stations, waterfront restaurants, and public parks.

- Comply with all federal and state laws for MSD equipment. MSD equipment is regulated and certified by the U.S. Coast Guard to meet certain treatment standards. Type I and Type II MSD equipment is usually a combination of physical treatment (grinder) and chemical treatment (chlorinator) prior to discharge. Post operating instructions near the MSD, and keep MSD maintenance guide and user's manual on the boat.

MSD	Fecal Coliform Limits	Discharge Criteria
Type I	< 1,000 / 100 ml	No visible floating solids
Type II	< 200 / 100 ml	Suspended solids < 50 mg/l
Type III	----------	No discharge (holding tank)

- Do not use boat toilets for disposal of fats, solvents, oil, emulsifiers, paint, poison, disposable diapers, or sanitary napkins. As a general rule, keep a supply of bags and containers ready for disposal of any conceivable item. Whenever possible, buy fast-dissolving marine toilet tissue for use in MSD equipment.

- Portable toilets shall not be discharged into U.S. territorial waters, which includes all lakes, rivers, and streams within Tennessee. Empty portable toilets at shoreside dump stations or at home.

- Use a pumpout station to empty holding tanks (and also MSD Type III equipment). Encourage marina owners to construct more pumpouts and dump stations by thanking marina owners and supporting their businesses.

Fuel and Oil

- Prevent fuel and oil from being discharged into the water or into the bilge by every means available. Use oil-absorbent pads and booms to contain any spilled fuel or oil. Boats with inboard engines should have oil absorption pads in bilge areas. The pads should be changed at least once a year or as needed. Do not pump bilge water if it is oily or has a sheen.

- Fuel, fluids, and oil should be kept in secure containers. Recycle used fuels in properly labeled containers. Inspect and repair engine valves, pipes, and hoses as necessary. Use drip pans when conducting maintenance and repair.

- Keep engine and other equipment in good operating condition. Inspect engine prior to each use. Follow manufacturer's recommendations for maintenance and tune-ups. Use drip pans and funnels when performing minor engine repairs.

- Avoid filling the fuel tank to the top. Watch and listen when filling the fuel tank. Use fuel stations with automatic shut-off nozzles whenever possible.

- Notify TDEC, the City of Memphis, and Shelby County in the event of major leaks and spills (as described in AM-07, Spill Prevention and Control). Use oil-absorbent pads and booms to contain the spill. Do not use any detergent, soap, cleaner, or emulsifier on a fuel spill, oil spill, or bilge water. These substances temporarily dissolve oil and grease, but do not actually remove the pollution from the water.

Litter and Fish Waste

- Do not discharge anything into the water, including excess food. Place all litter and waste into trash bags for disposal onshore. Retrieve any trash that falls overboard.

- In general, reduce the amount of unnecessary wrapping and packaging used on the boat. Reusable containers, cups, and dishes will reduce the amount of trash generated. Recycle whenever possible (aluminum cans, plastics, glass).

- Do not throw cigarettes (or other smoking materials) overboard. Use an ashtray when smoking. Do not spit chewing tobacco overboard.

- Do not discharge fish waste overboard. Place fish waste into trash bags for disposal onshore, or use a fish cleaning station onshore. Small amounts of fish parts may be used for bait or chum. Fish wastes should not be recycled in any dead-end lagoons or other poorly flushed areas. Restaurants are specifically prohibited from discharging fish wastes into the water; see IC-06, Over-Water Operations, for additional regulations for industrial and commercial facilities.

- People participating in fishing tournaments and other authorized events should follow guidelines presented by the sponsors. Follow all rules and regulations issued by the Tennessee Wildlife Resources Agency.

Boat Cleaning and Maintenance

- Plan all cleaning and maintenance activities beforehand. Use the proper equipment to perform the activity efficiently and swiftly, while minimizing pollution. Use phosphate-free and biodegradable detergents for hull washing. Limit the amount of detergents used by first scrubbing and cleaning with water.

- Perform all hull scraping, sanding, chemical stripping, and painting onshore. Place boat over a drop cloth and prevent the discharge of any chemicals or particles. Properly dispose of surface chips, used blasting sand, residual paints, and other materials. Use temporary storage containment that is not exposed to rain. Sweep dry docks each day or after maintenance is completed.

- Limit over-water hull surface maintenance to minor sanding and minor painting using hand tools and a small can of paint or other surface agent. In general, conduct most boat repair and maintenance items by removing the boat from the water into an organized maintenance area.

- Painting should be limited to spot work. In marinas, tenant maintenance over water should be such as to not require opening more than a pint-size paint can. Paint mixing should not occur on the dock. Use secondary containment on paint cans. Have available spill containment and cleanup materials. Use tarps, ground cloths, or plastic sheeting when sandblasting or painting boats on land. Spray applicators may be used when painting on land.

- Immediately clean up spills on docks or boats using absorbent materials. Keep ample supply of spill cleanup materials on hand and conspicuously marked. Dispose of cleanup materials properly. Consult AM-07, Spill Prevention and Control, for emergency telephone numbers.

Marina Operations

- Provide adequate waste containers, trash cans, and Dumpsters. Clean and maintain waste disposal areas in order to encourage patrons to not litter. Use responsible waste disposal contractors who are licensed to haul waste materials.

- Educate visitors and employees on spill prevention and cleanup. Include appropriate language in tenant and user contracts that indicates the responsibility for guarding against spills, properly disposing waste materials, and limiting practices that may pollute storm water.

- Clean catch basins and storm drains at regular intervals. Post signs to indicate proper use and disposal of residual paints, rags, used oil, and other engine fluids.

- Marinas must provide wastewater disposal facilities onsite or close by. Wastewater facilities typically consist of either dockside lines or a

pumpout station. Marinas should post signs at the entrance and through the facility indicating maintenance rules and reminders.

Limitations

- Private tenants at marinas may resist restrictions on shipboard painting and maintenance. Existing contracts with tenants should be updated to require that tenants abide by new rules that benefit water quality.
- Even small amounts of biodegradable cleaning agents have been found to be toxic to fish. Disposal of small amounts of cleaning agents should be done through the sanitary sewer system.

References

33, 95, 135, 192, 198 (see BMP Manual Chapter 10 for list)

U.S. Coast Guard http://www.uscg.mil/hq/g-m/mse/msd.htm

National Clean Boating Campaign
http://www.cleanboating.com/research/boatingpublic.html

National Clean Boating Campaign
http://cleanboating.org/bibliography/index.html

This BMP is adapted from a booklet (original date — September 1997) by:

Dr. Bruce A. Tschantz, P.E.

UT Water Resources Research Center
University of Tennessee, Knoxville

The primary purpose of this BMP is to inform the home owner, home buyer, and home builder about the usual causes for wet basements and crawl spaces, plus effective measures for preventing or correcting problems. This information can enable the public to build, select, or repair homes wisely. Although this BMP is not directly connected with water quality and storm water pollution, the matter of wet basements and crawl spaces is closely related to storm water design, landscaping, and minimizing contact with storm water

IMMEDIATE AND LONG-TERM PROBLEMS

Standing water or seepage inside residential crawl spaces and basements can cause frustrating problems for the home owner. These problems can be both immediate and long-term. For example, standing water and mud inside crawl spaces make it very difficult and messy to gain access under the house for inspecting, maintaining, and servicing electrical circuits, drains and water lines, heating and air conditioning, and other utilities. Wet basements and crawl spaces are sources of high humidity, which can produce surface condensation, mildew and fungi, musty odors, and an unhealthy environment. Such moisture can cause deterioration of floor joists, beams, subflooring, insulation, and electrical-mechanical systems. Prolonged water around the footer and foundation wall can soften the soil and weaken its bearing capacity, increasing the possibility of wall settlement and cracking. Serious seepage under the foundation footer may erode soil away and cause the wall to drop or crack. Excessive moisture can eventually penetrate the subflooring and buckle the flooring or cause warping, making doors and cabinets difficult to close or open. Since crawl space or basement dampness always moves toward the drier upstairs areas, higher humidity will result in costlier heating and air-conditioning bills. In the case of crawl spaces, if the underflooring insulation collects moisture, or sags from excessive wetness, the heating and air-conditioning costs are driven even higher.

Finally, wet basements and crawl spaces reduce the value of the house — at least by the amount that would be required to repair the damage and to eliminate the cause of the problem. Home owners in these situations should immediately seek professional assistance in assessing the source and extent of the problem and in finding a remedy.

CAUSE OF WET BASEMENTS AND CRAWL SPACES

Most wet basements or crawl spaces are caused by surface water that is not adequately drained away from the foundation wall. Sources of this water may include the following:

- Roof water, if no guttering is present or if the guttering leaks and overflows due to leaves and obstructions. Concentrated roof water, when falling from a height of one or two stories, can cause erosion along the foundation wall and exacerbate the problem of storm water infiltration.

- Roof water, if the downspouts are clogged or do not have sufficient means to drain water away from the foundation wall. Frequently, a downspout ends at the corner of the house without a splash pad (splash block) or shoe (sometimes called an elbow), leaving roof water to concentrate at that point and seep into the soil next to the foundation wall. A typical 2,000-square-foot roof can produce almost 1,250 gallons of water during just 1 inch of rainfall. If rainfall is steady and prolonged, roof water is even more likely to soak into the ground next to the foundation wall.

- Excessive watering of flower beds and shrubbery around the foundation wall. Once the upper soil layer or mulch bed is filled with water, the excess water either runs off or seeps into the ground next to the wall. Prolonged watering can contribute large amounts of water to crawl spaces or basements.

- Rainwater runoff from the adjacent lawn, walks, or driveway areas if the landscaping slopes to drain water toward the house instead of away. If surface runoff is directed toward foundation wall, water will pond and then soak into the soil, thus becoming a potential source of basement or crawl space water. Downspout splash pads are not very effective if the lawn drains back to the foundation wall.

Water or dampness problems in basements or crawl spaces are sometimes caused by other factors:

- Subsurface or groundwater may be intercepted or dammed up by a basement or foundation wall. Houses that are built on a hillside are particularly vulnerable. Foundation walls act like dams to intercept and trap this subsurface water, causing pressure to build up on the outside of the wall, which forces water through joints and cracks in basement walls or as seepage under the footer.

- Nearby springs may have been filled in or covered up by the developer. Unless the springs were properly drained away from the lot or subdivision, such water will eventually seep into the surrounding fill, become a pool of groundwater, and eventually force itself laterally and upwardly into basements and crawl spaces.

- Nearby creeks may overflow during storm runoff and either directly flood basement or crawl space areas, or contribute to the groundwater, which may become sufficiently high to cause seepage into the basement or crawl space area. Home owners may not experience the effects of groundwater seepage or overflowing creeks for months or years after purchasing a house because of drought or infrequent out-of-bank flooding. However, when such conditions do occur, they may come suddenly without warning and cause serious problems after the warranty period has expired.

- Improperly installed, clogged, collapsed, or leaky drains may not allow water to escape. Perimeter, footer, or foundation drains are installed around the exterior of a house below basement floor level to intercept groundwater build-up and seepage under the house. If drains are improperly installed or become clogged with silt or roots, they will not operate as intended. Sometimes an otherwise good perimeter drain gets covered up or crushed during the final backfilling or landscaping stages of construction, and the intercepted water will backup into a foundation wall and eventually seep into the basement or crawl space.

- Soil continuously draws water up from subsurface groundwater sources in a crawl space by capillary attraction. The finer the soil (e.g., clays), the more aggressive the capillary pumping action. As the water rises to the surface, it evaporates into the crawl space. This ground moisture is a significant source of dampness and humidity under a house, even without standing water. The presence of capillary water is often indicated by a whitish residue, left on the ground surface of the crawl spaces, resulting from evaporation of water containing minerals and salts. Lack of a moisture barrier, such as a plastic sheet, will allow capillary action and evaporation to contribute unlimited moisture to crawl space areas. Figure RH-12-1 illustrates how surface water and moisture can enter a crawl space area.

- Closed, inadequate, ineffective, or no crawl space venting around foundation walls will force the buildup of humidity in the space beneath a house. Given the combination of high humidity and low temperature, condensation can form on heating/AC ducts, joists, underflooring, and insulation. This environment, together with likely darkness, encourages mildew and other fungi to form.

- Damp or wet basements and crawl spaces may be caused by ruptured water or sanitary lines either just outside the wall or under the house. If a crawl space is unusually wet and muddy, inside leaks may be difficult to find and repair. Outside pipe leaks may be even more difficult to find, since water may appear several feet away from the actual leak. Old field drains under a house may also be a source of unwanted water.

PREVENTING WET BASEMENTS AND CRAWL SPACES

Many construction complaints about new homes arise from inadequate site drainage and water problems. Proper drainage of surface water is a primary element in preventing wet basements, damp crawl spaces, eroded banks, muddy yards, and possible failure of a foundation system. The City of Memphis and Shelby County requires that new construction or alteration of houses conform to the requirements of the Southern Building Code Congress International, Inc. (SBCCI). Generally, surface water drainage should be directed from all sides of the house and off the lot in a manner that will:

- Minimize possibility of dampness in basements and crawl spaces
- Prevent standing or ponding water on the site
- Prevent soil erosion
- Not adversely affect the supporting foundation soil behavior

Walks, driveways, retaining walls, and other landscape improvements should be constructed so as not to interfere with drainage. Walks should not be used as drainage channels. Site grading plans should specify minimum slopes from the house (usually 2 to 5%), depending on location, type of soils, frost depth, and soil moisture, to ensure water drainage for some specified distance (usually 6 to 25 feet) away from supporting foundations. In cases where minimum slopes or distances cannot be attained, paved gutters or other drainage structures acceptable to the building inspector may need to be installed. Maximum slopes are specified to prevent erosion or unstable banks around the house and yard.

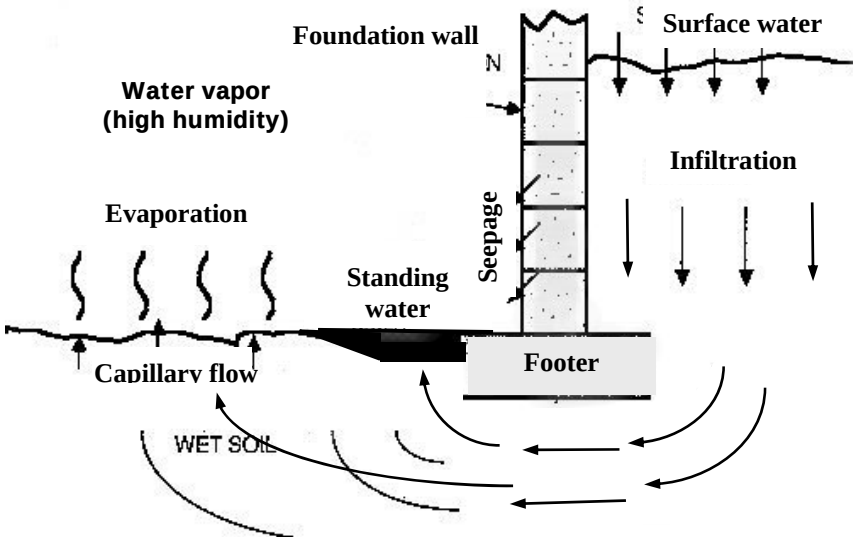

Figure RH-12-1
Typical Paths of Water and Moisture Entering Into a Crawl Space Area

Roof water should be directed to a downspout and away from the foundation wall toward a suitable ditch, swale, or drainage pipe to prevent ponding or backflow as shown in Figure RH-12-2. All drainage structures should be properly connected to adequate outlets that are protected, where necessary, by recorded permanent easement. House plans and landscaping should be developed to prevent "dead" drainage areas around the foundation wall—areas where rainfall has no place to flow away except by ponding and soaking into the soil near the foundation wall. Areas bounded by the front entrance/sidewalk/garage/driveway are especially vulnerable to trapped pockets of surface water.

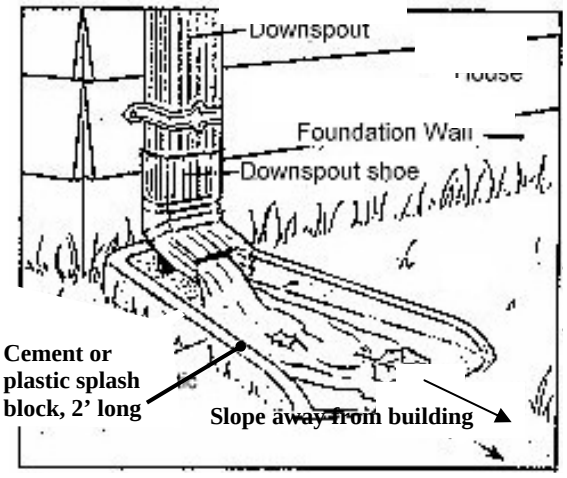

Figure RH-12-2
Correct Installation of Downspout Shoe and Splash Block at Foundation Wall.
(Note that the ground surface slopes away from house.)

Another vital step in preventing water in basements and crawl spaces is to intercept outside subsurface or groundwater with a perimeter drain at the footer base level around all sides of the house where the exterior ground surface is higher than the inside floor or crawl space level. While foundation drains are clearly necessary for houses with basements or potentially habitable living space below exterior ground surface, they may also be used in crawl spaces where water, soil, and/or earth floor elevation conditions warrant. The drains should discharge by gravity to a positive outfall such as an approved drainage ditch, swale, or storm system. In some cases, sump pits and pumping with automatic float actuation may be required.

Specifications for waterproofing and damp-proofing foundation walls are found in SBCCI. Building codes specify the materials, maximum vapor transmission rate, venting, etc., appropriate for construction. Excessive moisture vapor can be prevented from entering a crawl space area with the use of an effective and correctly installed vapor barrier (typically polyethylene sheeting) over the ground surface. Torn pieces, poor or non-overlapping joints, missing sections, or improperly sealed corners and edges at the walls, fireplaces, and interior piers must be avoided to produce an effective vapor barrier.

Crawl space areas should have adequate wall ventilation openings around the foundation walls to provide cross ventilation for preventing the buildup of water vapor inside the crawl space. Building codes specify minimum vent opening areas (usually 1 square foot of net opening for each 150 square feet of crawl space), opening location or arrangement, corrosion-resistant wire mesh screen, and any reduction in ventilation opening area allowance if an approved vapor barrier is used.

In older houses where any of the above moisture control methods are missing, measures should be

taken to install appropriate drainage facilities, vapor barriers, or ventilation openings. Installing any of these elements after a house has been built will be more costly than while the house is constructed. A combination of remedial measures is often necessary. If the yard area slopes toward the house and surface water collects or ponds near the foundation wall, a V-ditch or swale should be constructed around the house to allow surface drainage from both the foundation wall and the other yard areas to an adequate ditch or storm drain. Such cases often exist where the front street is higher than the first floor of the house, or when the house is built on the side of a hill. Figure RH-12-3 illustrates how this problem can be solved.

If a flower bed or garden is next to the foundation wall, it may be a significant source of water for the basement or crawl space. Consider relocating the flower bed or shrubbery, or install heavy plastic sheets with drains beneath the flower bed. Then any water that soaks deeply into the soil is intercepted and carried safely away by gravity at least six to eight feet from the house to a gravel collection drain or swale.

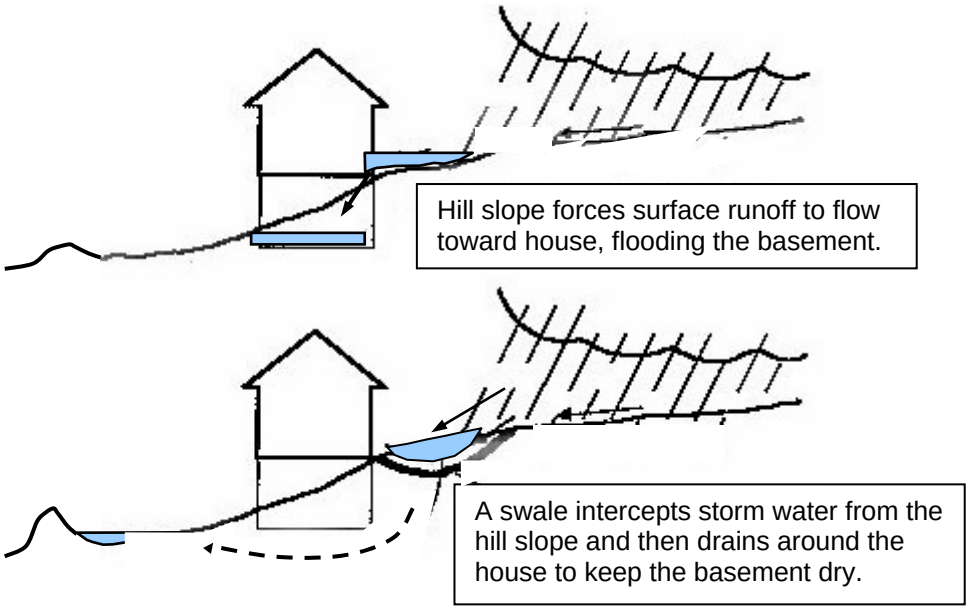

Figure RH-12-3
Correction of Typical Slope Drainage Problem Using Swale or Ditch

TIPS FOR HOME OWNERS AND HOME BUILDERS

To paraphrase and old axiom, "a teaspoon of prevention is worth a gallon of cure" certainly applies to new home builders — at least in avoiding water problems in basements or crawl spaces. Buyers of new or older houses should be cautious about drainage. The best time to sign a contract is on a rainy day!

Tips for buying or building a new house

The following tips are suggested to avoid water problems when building or buying a new house:

- Work with a professional engineer or architect to help locate the new house on the lot and at an elevation that minimizes the potential for surface or groundwater drainage problems. If a flowing stream or creek is nearby (especially if bordering the lot), check with local planning agency

authorities or a hydrologic engineer for potential flooding, whether in a designated 500-year flood hazard zone or in an area that may be affected by nuisance flooding.

- Work with a reputable home builder that can supply reference names and projects for houses that the company has built. Visit these sites and check for patterns of any drainage problems. Contact the Better Business Bureau and other organizations to see if there are complaints and outstanding issues.

- It may be beneficial to hire an engineer or architect to check slopes, foundation wall waterproofing and damp proofing, underground drains, general surface and roof water drainage, and general quality of construction. If you suspect a potential problem, ask the local building inspector for advice.

- Check to make sure that the perimeter foundation drain, basement drain, or crawl space drain has an unobstructed outlet to a ditch or swale leading away from the house. Pay special attention around the outside and the basement or crawl space for: (1) backsloping lawns and landscaping toward foundation walls; (2) backsloping driveways toward garage, stoops, walks, or patios that force surface water toward the foundation wall; (3) very flat property; (4) standing water inside of crawl space next to foundation wall; (5) pattern of wet concrete blocks inside basement walls, particularly with whitish salt deposits on inside foundation walls as a result of leaching from moisture seepage and evaporation; (6) downspouts that drain to the foundation wall without any clear path for water to escape; and (7) depressions or settlement near the foundation. If necessary, use a level to check the slope direction.

- For specific construction or drainage questions, refer to applicable building codes, inspection/permit requirements, Memphis storm water ordinance, zoning ordinance, and local flood mapping documents. Some of these resources are available on the Internet at the City of Memphis and Shelby County Web sites. Above all, don't be timid about asking the questions to the realtor or builder. Document questions and concerns in writing.

Tips for buying an older home

The following recommendations are made to the prospective older home purchaser:

- Visit the house during or shortly after a prolonged or heavy storm. Check for water in the basement and crawl space, or hire a professional house inspector prior to purchase. Ask the realtor about any known water problems — inside or outside — by the previous owner. Check with the neighbors to see if the house has a history of drainage problems, wet basements, or damp crawl spaces. Don't necessarily accept a realtor's or builder's suggestion that water seepage into basement or crawl spaces is normal and should not be a concern.

- For houses with basements, carefully check for stain signs of standing water around the walls or seepage coming through the walls, especially along the walls having the highest outside ground level. Look for whitish salt deposits on inside foundation walls left from moisture seepage and evaporation. For houses with crawl spaces, use a flashlight and check for current or previous water ponding, mud, mildew, condensation on various surfaces, or sagging or wet insulation.

- Check the basement and crawl space for musty odors and signs of mildew, condensation on surfaces, and unusually heavy rust deposits. Try to determine the source of the moisture — foundation wall seepage; capillary moisture from the crawl space ground; water or sanitary pipe

leakage; poor crawl space ventilation; or combination of problems. Check the inside corners for cracks and separation of blocks at the joints from foundation settlement.

Tips for home owners who currently have water problems

- Check to see if the house is in warranty—if so, discuss the problem with the builder and ask him to correct it. If the builder refuses, contact an attorney for advice. If the warranty period has expired, have an expert in drainage engineering determine the cause of the problem, whether or not the problem is serious, and what can be done to correct it.

- Check to see if all surface and subsurface drains are functioning. Use a hose to see if roof and gutter water is being directed away from the foundation wall. Refrain from heavy watering of flower beds and shrubbery next to the house. Observe the path of all surface drainage around the house during prolonged or heavy rainfall. Watch for ponding near the walls. Check to see if the foundation drain is operating by looking for evidence of seepage from the ends.

The following three Web sites are indicative of the amount of information available on the Internet. *Investigate* all promises and statements made by any company or service prior to entering into an agreement.

Wet basements	http://www.allaroundthehouse.com/lib.abc.na25.htm
Wet basements	http://www.accurateinspection.com/wet_basements.htm
Vapor barriers	http://www.eren.doe.gov/consumerinfo/refbriefs/bd4.html

Some problems may be solved simply by repairing an obvious gutter or downspout leak, while other problems may have causes that are difficult to identify and very expensive to fix. Severe crawl space water problems may cost several thousand dollars to remedy. Always use a competent professional to help you find and eliminate the source of the problem. Don't settle on quick and cheap fixes that merely deal with the symptoms of the problems.

Above all, remember that in most home purchases it is . . . LET THE BUYER BEWARE.

ACTIVITY: Dry Detention Basin	ST – 01

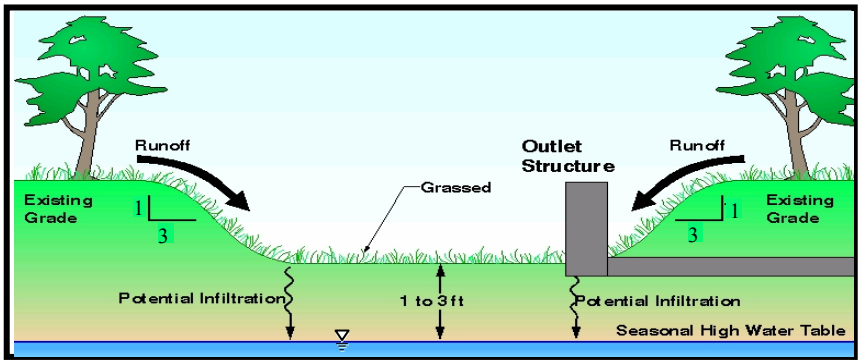

Targeted Constituents

● Significant Benefit ◗ Partial Benefit ○ Low or Unknown Benefit

● Sediment	◗ Heavy Metals	◗ Floatable Materials	◗ Oxygen Demanding Substances	
◗ Nutrients	◗ Toxic Materials	◗ Oil & Grease	○ Bacteria & Viruses	○ Construction Wastes

Description

A dry detention basin is the most common method for satisfying storm water detention and storm water quality requirements. It is applicable to small and large developments, can be easily designed and constructed, and, with adequate inspection and maintenance, is long lasting and durable. This practice will provide a significant reduction in sediment, as well as a partial reduction in nutrients, toxic materials, heavy metals, floatable materials, oxygen demanding substances, and oil and grease.

A dry detention basin is intended to be dry between storm events, but may not necessarily have a chance to drain completely prior to the next storm event. The detention basin begins to fill as storm water runoff enters the facility. The first flush volume is captured in order to ensure water quality. One or more outlet structures then release the storm water runoff slowly to reduce peak discharge rates and to provide time for sediments to settle. Protect area streams and lakes by preventing litter and debris from leaving the detention basin. Some soluble pollutants are captured by a combination of vegetation and soils.

Selection Criteria

- The primary objective is to reduce the peak flow discharge and slow the storm water runoff response for a particular property or development, thus reducing flooding downstream. Procedures for preparing calculations are outlined in Volume 2, Chapter 2, Hydrology, of the Storm Water Management Manual (SWMM) and include the correct use of Natural Resources Conservation Service (NRCS) Technical Release 55 for determining the required detention storage. An example detention problem is worked with complex spreadsheets and HEC-1/HEC-HMS runs in Volume 2, Chapter 8, Detention, of the SWMM.

- The secondary objective is to remove suspended sediment, trash and debris, oil, grease, and other pollutants to protect the water quality of Memphis and Shelby County streams and channels. Although dry detention basins are usually not as effective at removing soluble pollutants as wet detention basins and wetlands, dry detention basins are usually easier

and less expensive to construct, inspect, and maintain. Dry detention basins can be used wherever a lack of sufficient supply water would prevent the use of wet detention basins or wetlands.

- Dry detention basins can also supply multiple benefits for passive recreation during dry periods (recreational trails, ball fields, picnicking). Portions of a dry detention basin that are not wetted frequently can be attractively landscaped or used for other purposes. See Figure ST-09-1 for the typical placement of various storm water treatment BMPs near streams and natural areas.

Design Approach

- As the primary objective, dry detention basins must be designed to have adequate detention storage and outlet structures. See Volume 2, Chapter 8, Detention, of the SWMM for a discussion of detention design methods and formulas that are acceptable. Memphis and Shelby County require volume control of the two-year and five-year NRCS Type II rainfall storm design events. In addition, peak control of the 10-year NRCS Type II rainfall is required. The outlet structure must be made from durable concrete or masonry construction, and typically the outlet structure has multiple weirs and/or orifices to release the design storms at predevelopment rates.

- As the secondary objective, water quality is obtained through detaining the volume of the two-year and five-year rainfall events. The initial wave of storm water runoff is more likely to contain aerially deposited sediments, particulates from vehicles (such as incomplete combustion, dust from brake linings, and tire particles), leaves, trash, cigarette butts, etc. In addition, vegetative cover that lines detention basins will serve as a biofilter for first flush pollutants.

- Additional measures may be required to improve storm water quality, depending upon the nature of the land use and expected pollutants. Pretreatment of storm water runoff with a media filtration inlet or oil-water separator may be necessary. A trash rack for capturing floating debris is generally considered to be standard equipment for a storm water treatment BMP.

- Storm water runoff that falls onto pavement and rooftops should be detained and treated in a manner that will reduce thermal impacts to streams. This may include locating a detention basin away from sunlight by using trees or buildings as shade.

Location & Layout

Basic elements of a dry detention basin are illustrated in Figure ST-01-1. The recommended design includes the use of a sediment forebay to reduce sediment loading, particularly if the detention basin is modified to also function as a temporary sediment basin during the construction phase. The use of an upper stage (for storage of infrequent storms) is optional; there are both benefits and drawbacks. A shallow detention basin with a

large surface area will usually perform better than a deeper detention basin with the same volume. However, shallow storage areas increase the overall surface area needed for detention.

Design flow paths to minimize potential short-circuiting by locating the inlets as far away from the outlet structure as possible. The length-to-width ratio of a basin should be at least 2:1 (and preferably 3:1). Baffles or backslope drains may be used to prevent short-circuiting. If topography or aesthetics require the pond to have an irregular shape, increase pond area and volume to compensate for dead spaces. It is important to reduce the velocity of incoming storm water using riprap or other energy dissipaters.

Although dry detention basins are generally less expensive to construct and maintain than wet detention basins, they provide lower water quality benefits. The primary disadvantage of a dry detention basin is the required amount of surface area, which can be reduced somewhat by using concrete retaining walls on one or more sides. In general, concrete retaining walls should not face southward in order to reduce the potential for heating on hot summer days.

Interaction with site utilities must be considered during preliminary design. Typical utilities include electrical, telephone, cable television, water, sewer, natural gas, petroleum, etc. These utilities may or may not be in a dedicated utility easement, so it is always necessary to conduct a careful site survey. Detention basins (including embankments) are not allowed over utility lines.

Detention basin access must be considered during preliminary design in order to allow for construction and maintenance. Detention basins that are not frequently inspected and maintained often become more of a nuisance than a beneficial part of a storm water management program. In particular, provide access for inspection and maintenance to the sediment forebay and to the outlet control structure. It may also be desirable to encourage or discourage public access to the detention basin (by using site grading, signs, fences, or gates). Additional safety elements include trash racks, grating over pipes and culverts, gentle side slopes whenever possible, increased visibility and/or lighting in residential areas, etc.

Small detention basins serving individual properties do not offer as much recreational benefit as community or regional detention basins do. Regional facilities can often be landscaped to offer recreational and aesthetic benefits. Jogging and walking trails, picnic areas, and ball fields are some of the typical uses. For example, portions of a flood-control facility can be used for exercise areas, soccer fields, or football fields. Wildlife benefits can also be provided in the form of islands, buffer areas, or preservation zones. Figure ST-09-1 shows an example of a multiuse regional facility.

Volume and Size

The volume of a dry detention basin consists of two elements: the live pool (the upper portion of the basin representing detention capability) and the first flush volume (the lower portion of the basin representing storm water quality treatment). These two elements should be sized according to detention computations in Volume 2, Chapter 8, Detention of the SWWM, and also the procedures from NRCS Technical Release 55 (reference 175). Verify that the preliminary estimate of volume and size works by routing the storm water hydrographs.

As a warning to those who design detention basins, it should be recognized that future storm water regulations are likely to be more stringent than the current regulations. Such measures are mostly driven by national and state laws and regulations, which will require municipalities and county governments to accomplish additional pollution reduction with a proportional effort for water quality monitoring and enforcement. Figure 4-2 in Chapter 4 of the BMP Manual shows the measured pollution removal values for dry detention basins near metropolitan Washington, D.C. It is anticipated that this type of information will become more commonplace and more useful in the near future.

Grading

Side slopes shall generally be 3:1 (H:V) or flatter to allow for traversable access to the bottom of the detention basin. This also encourages a strong growth of vegetation on the side slopes and helps to prevent soil erosion. Steep slopes, particularly on embankments or other fill soils, will contribute to soil erosion, and thereby reduce or negate the effectiveness of a dry detention basin with respect to water quality. Vegetate the side slopes and basin bottom to the maximum extent practical. If side erosion is particularly severe, consider the use of soil stabilization or armoring techniques. Do not locate detention basins immediately above or below a steep slope or grade, because impounded water may create slope stability problems.

Minimum width for top of embankment is 5 feet. Allow for 10% settlement of embankment, unless the embankment is thoroughly compacted with vibratory equipment or sheepsfoot rollers. The top of embankment (after expected settlement) shall generally be at least 2 feet above the top of outlet structure and at least 1 foot above the peak 100-year water surface elevation.

Compaction in the immediate area of the emergency spillway is necessary.

In instances where storm water runoff does not flow directly down a slope, the side slope of a detention basin can be as steep as 2:1 (H:V) with proper erosion controls, geotextiles, and quick establishment of vegetation. Retaining walls may be used on one or more sides of a detention basin if properly designed. Analysis of a retaining wall should include effects of saturated soil behind the retaining wall, in addition to the usual design considerations of vehicle and structural loadings above the retaining wall.

The use of a backslope drain can be very beneficial in preventing erosion at detention basins. See Figure ST-01-5 for a typical detail. The backslope drain is also useful for increasing lengths of flow paths to prevent short circuiting of the detention basin. Intercepted storm water can be routed around the detention basin to enter at the most hydraulically distant point from the outlet structure.

Outlet Structure

Memphis and Shelby County require that a detention basin outlet structure be constructed from concrete, masonry block, or other durable materials. Metal corrugated metal pipe (CMP) risers used as outlet structures have problems with crushing, flotation, and durability. A concrete outlet structure is preferable to a masonry block structure because it is sturdier and more durable. Provisions should be made for sufficient reinforcement and anchoring.

The specific flow-controlling elements of an outlet structure may include one or more of the following: circular orifice, noncircular orifice, rectangular weir, trapezoidal weir, triangular weir, V-notch weir, culvert entrance control or riser overflow opening. These types of controls are described at length in Volume 2, Chapter 8, Detention, of the SWMM.

Figures ST-01-2 and ST-01-3 illustrate possible designs for the outlet structure. These details are only two possible ways to accomplish storm water detention and storm water quality control. The first flush volume is typically drained during a minimum time of 24 hours by using an orifice with a designed size. Maximum drain time should be less than 72 hours to allow for sufficient volume recovery prior to the next period of rainfall. The first flush volume can be filtered through sand by using an underdrain system (shown in Figure ST-01-2) or by an aboveground filter box with sand or aggregate (shown in Figure ST-01-3). Figure ST-01-4 shows an alternative outlet structure with a water quality manhole. Provide an emergency spillway in order to route large storms through the facility without overtopping.

Common Problems

- Inadequate storage is the most frequent problem that occurs in the design review before construction, as well as for the as-built review after construction. This can occur for several reasons:

  — The design engineer did not allow enough room to construct the detention basin (most often due to insufficient design detail such as slope transitions, setbacks, parking lot widths, inaccurate contours, utilities not shown).

  — The engineer who performs the storm water computations is not the same person as the design engineer who does site layout and grading. The required detention storage volume and outlet structure details need to be communicated clearly to the design engineer for inclusion on the plans.

— The construction contractor does not excavate deeply enough or does not build berms of sufficient height to hold the required detention volume. This may occur due to rock formations or groundwater encountered.

— The construction contractor changes the basin configuration during construction without being aware of the required volume.

— Approval from the city or county was not obtained for a design change.

- It is highly recommended that the design engineer be involved in the construction and inspection of the detention basin. Special attention should be given to the detention basin volume, elevations of each outlet, side slopes, size and shape of various weirs or orifices, and installation of cutoff collars in embankments.

- Proper hydraulic design of the outlet is critical to achieving good performance for both storm water detention and storm water quality of the dry detention basin. The two most common problems for detention basin outlets are:

  — The discharge capacity of the outlet structures is too great. This causes excessive basin outflows, and results in fast drawdown times and inadequate filling of the detention basin volume. Both storm water detention and storm water quality will suffer.

  — The outlet structure clogs because it is not adequately protected against trash and debris. The use of innovative trash racks is recommended. A typical trash rack is often created using welded rebar with 2” openings sufficient to stop most beverage cans, food containers from restaurants, tree limbs, etc. A trash rack sized with 1” to 1.5” openings is preferable because it can also catch leaves and small sticks.

Maintenance

- Inspect the dry detention basin regularly (several times a year) and particularly after heavy rainfall events. Record all observations and measurements taken. Perform any maintenance and repair erosion promptly. Remove debris and trash after storm events. Check outlet structure regularly for clogging.

- Remove sediment when accumulation becomes noticeable (1" to 2" over a wide area) or if resuspension is observed or probable. Sediment may be permitted to accumulate if the detention basin volume has been overdesigned with adequate controls to prevent further sediment movement. If a sand underdrain is used, look for reduced infiltration or ponded water; sand layer replacement may be needed.

- Maintain a thick and healthy stand of vegetation (usually grass). Mow or trim at regular intervals to encourage thick growth. Remove leaves, grass clippings, or sticks from the detention basin regularly to prevent storm water pollution. Remove trees or nuisance vegetation as necessary to ensure structural integrity of the basin.

- If both the operational and aesthetic characteristics of a dry detention basin are not properly maintained, then it becomes an eyesore and has a negative environmental impact. Vegetation needs to be trimmed or harvested. Ensure that repairs are made to walkways, picnic tables, signs, and public recreation equipment as needed.

Sediment Removal

A primary function of storm water treatment BMPs is to provide details on collecting and removing sediment. The sediment accumulation rate is dependent on a number of factors including watershed size, facility size, construction upstream, nearby industrial or commercial activities, etc. Sediment should be identified before removal and disposal is performed. Special attention or sampling should be given to sediment accumulated from industrial or manufacturing facilities, heavy commercial sites, fueling centers or automotive maintenance areas, parking areas, or other areas where pollutants are suspected. Treat sediment as potentially hazardous until proven otherwise.

Some sediment may contain contaminants for which the Tennessee Department of Environment and Conservation (TDEC) requires special disposal procedures. Consult TDEC — Division of Water Pollution Control (368-7939) if there is any uncertainty about what the sediment contains or if it is known to contain contaminants. Clean sediment may be used as fill material, hole filling, or land spreading. It is important that this material not be placed in a way that will promote or allow resuspension in storm water runoff. Some demolition or sanitary landfill operators will allow the sediment to be disposed at their facility for use as cover. This generally requires that the sediment be tested to ensure that it is innocuous.

Limitations

- A dry detention basin will require frequent inspection and maintenance. Trash, debris, leaves, and other large items should be removed from the detention basin following each rainfall event. If upstream erosion is not properly controlled, dry detention basins can be maintenance intensive with respect to sediment removal, nuisance odors, insects, and mosquitoes, etc.

- A dry detention basin may not have sufficient vegetation on the slopes and bottom to prevent erosion and pollutant resuspension. Vegetation must be maintained and cut at adequate intervals. Remove grass clippings from detention basin immediately after cutting, using rakes or other hand equipment.

- A dry detention basin that impounds more than 30 acre-feet of volume (and minimum 6 feet high) or that is higher than 20 feet (and minimum 15 acre-feet of volume) is subject to the Tennessee Safe Dams Act of 1973 and as amended by law. The Safe Dams Act is administered by the TDEC Division of Water Supply; further information on design standards, regulations and permit applications is available at the TDEC Web site:

  http://www.state.tn.us/environment/permits/safedam.php

- Dry detention basins require a relatively large surface area (1% to 3% of the contributing drainage area) in order to provide sufficient pond volume for detention and water quality. Dry detention basins require a differential elevation between inlets and outlets, for which extremely flat areas may not be suitable.

References **9, 28, 31, 33, 48, 50, 58, 73, 76, 77, 78, 81, 83, 88, 140, 145, 153, 166, 175, 180, 182** (see BMP Manual Chapter 10 for list)

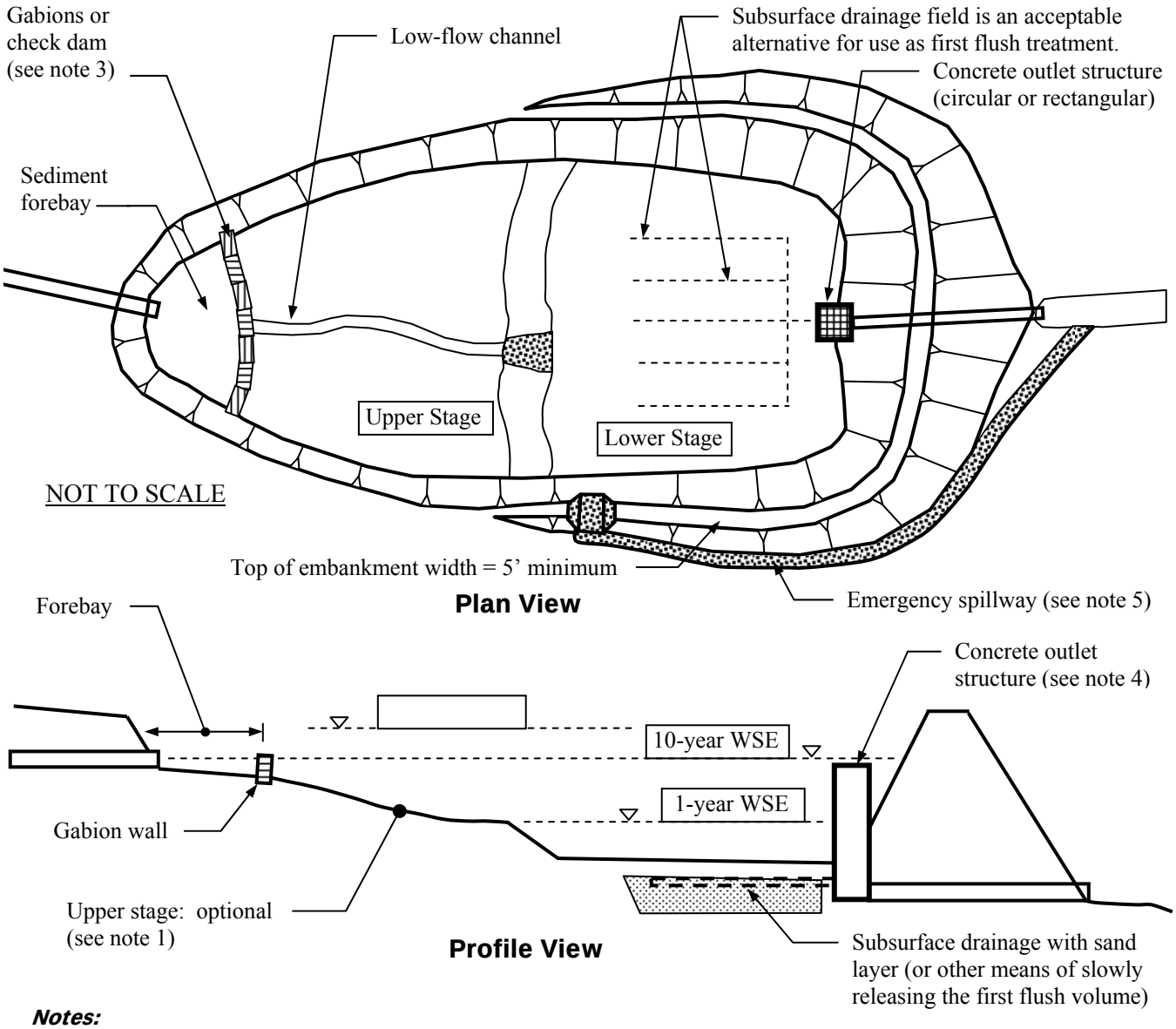

Notes:

1. This example of a typical dry detention basin layout shows an upper stage which is used for storm water detention on infrequent storms. An upper stage can also be located on the side of a dry detention basin, eliminating the need for a low-flow channel.
2. The lower stage is typically sized to handle the first flush volume or the one-year design storm, whichever is greater.
3. A forebay can be constructed from gabions, rock check dams, or a separate berm with culvert. A forebay can facilitate the capture and cleanup of coarse sediments, debris, and trash.
4. The outlet structure typically has orifices or weirs at computed elevations that will release the predevelopment volume of the two-year and five-year storms and the 10-year storm at the specified predevelopment peak flow rates.
5. The emergency spillway is generally constructed on natural ground or excavated areas (rather than fill soils) to reduce the potential for erosion and washout.

Figure ST-01-1
Typical Dry Detention Basin Layout

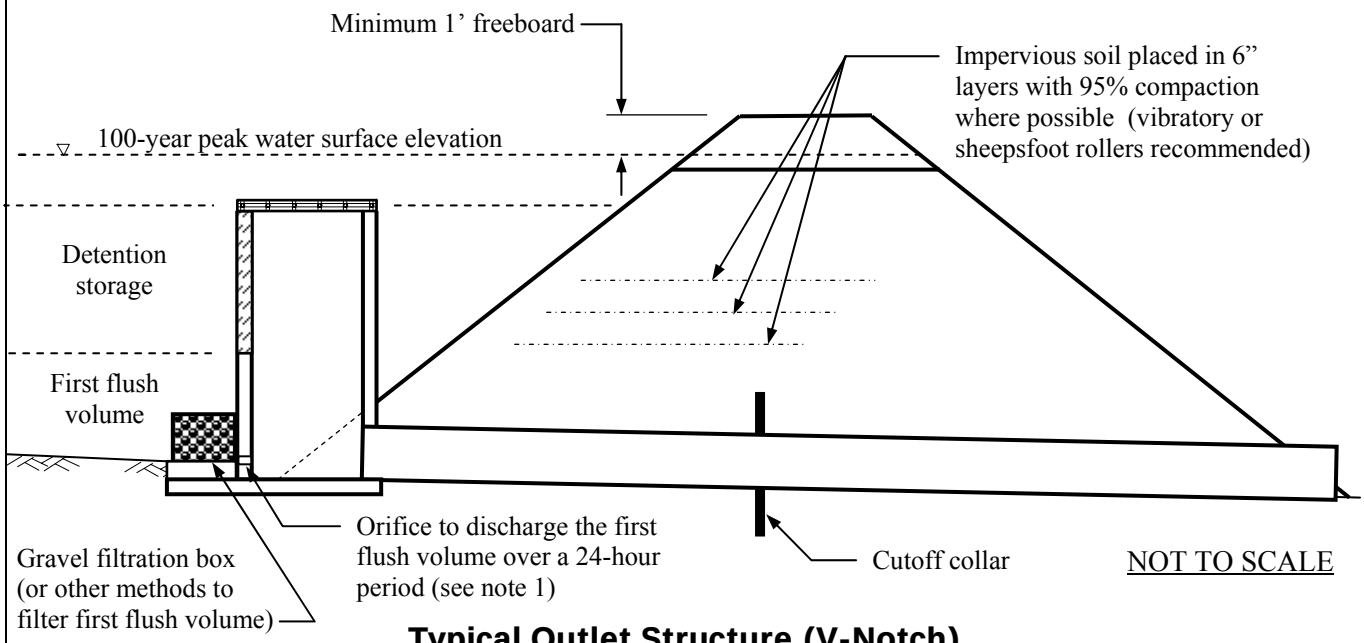

Typical Outlet Structure (V-Notch)

Notes:

1. The orifice is sized to release the first flush volume over a period from 24 to 72 hours. Protect the orifice from clogging by a sand filtration box, gravel filtration box, or with a trash rack.
2. This example of a typical outlet structure shows a V-notch weir, which should be sized to release the volume of the two-year and five-year storms and the 10-year storm peak flows at the predevelopment rates.

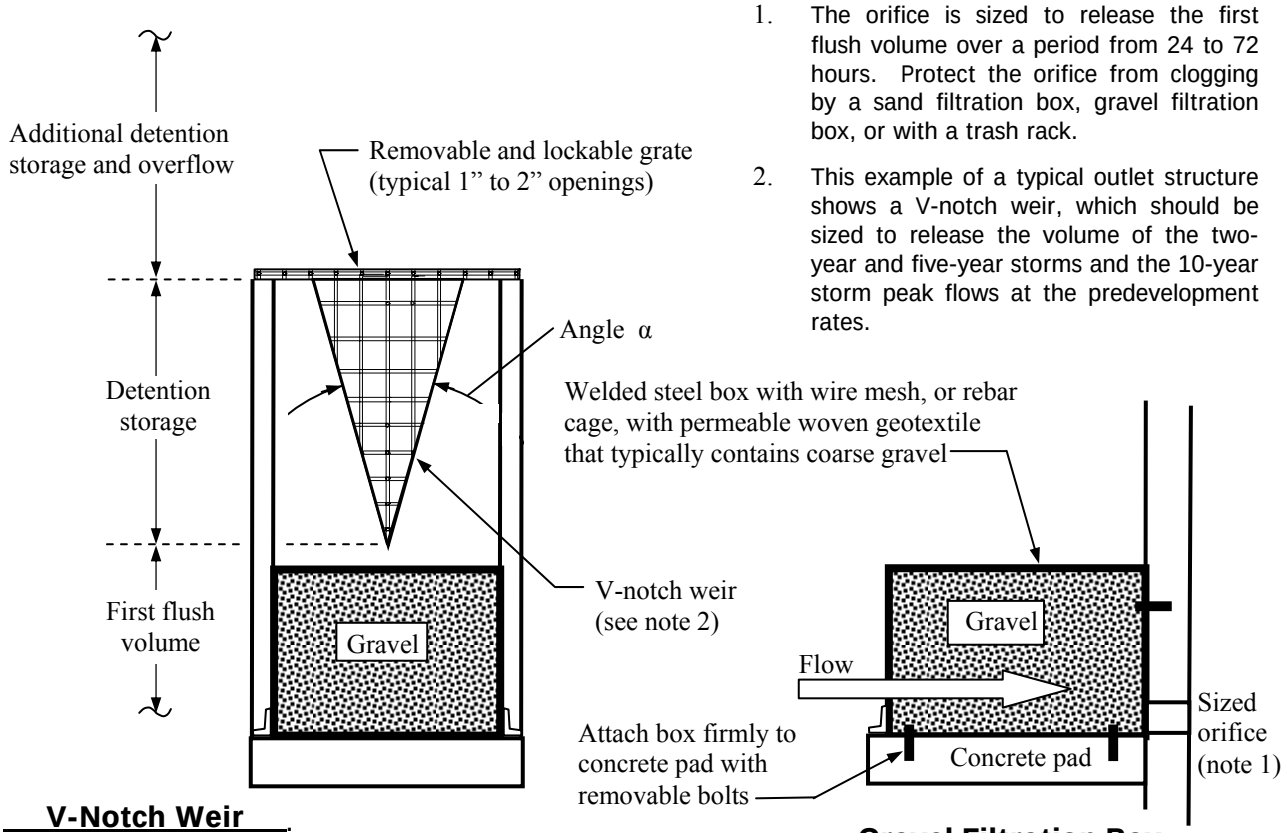

V-Notch Weir
(to control outflows)

Gravel Filtration Box
(first flush release)

Figure ST-01-2
Typical Outlet Structure
(shown with a V-notch weir and gravel filtration box)

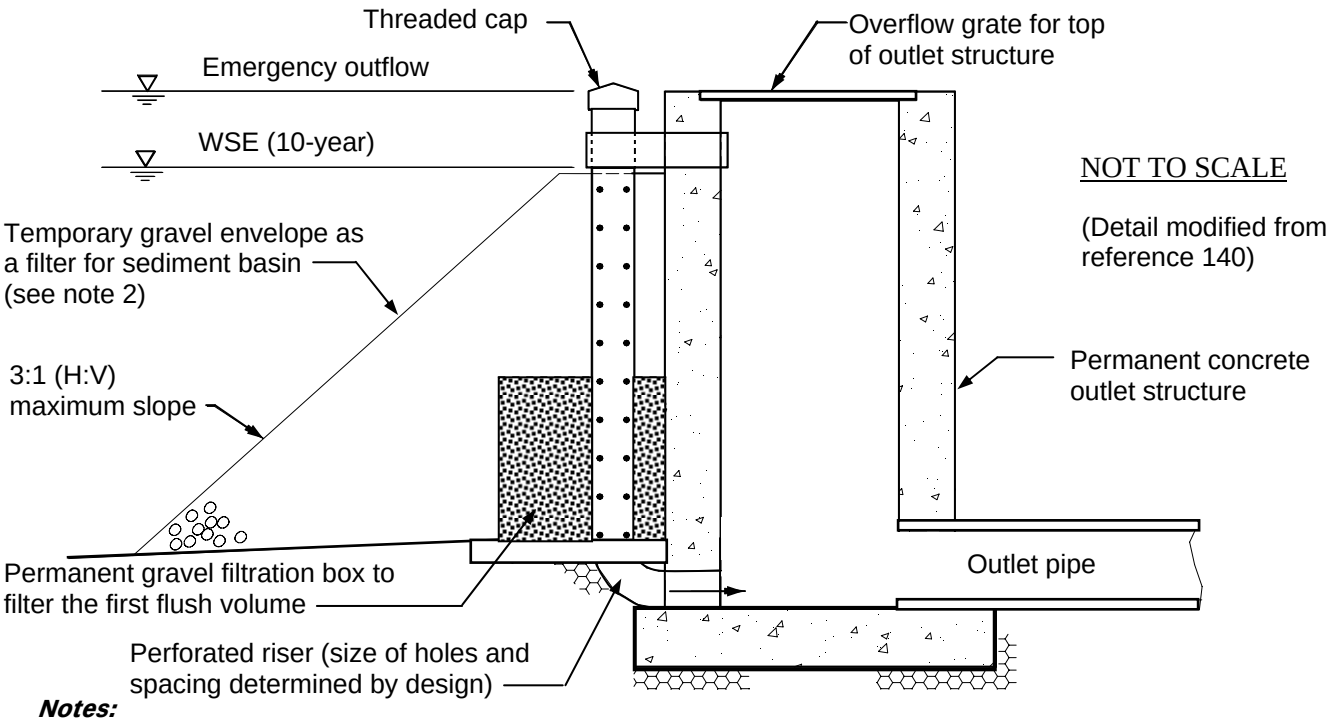

Notes:

2. This type of outlet structure may be used as a permanent outlet structure for a dry detention basin. Maintain the gravel filtration box in unclogged condition within an enclosure in front of outlet structure to protect the perforated riser.

OR

1. This type of outlet structure may be used as a temporary modification to a dry detention basin (so that it may also function as a sediment basin). A temporary plastic riser is securely fastened using bolts, screws, or threaded connectors. Use gravel to help protect the temporary riser.

Figure ST-01-3
Outlet Structure — Alternative A
(also shown as a temporary sediment basin during construction)

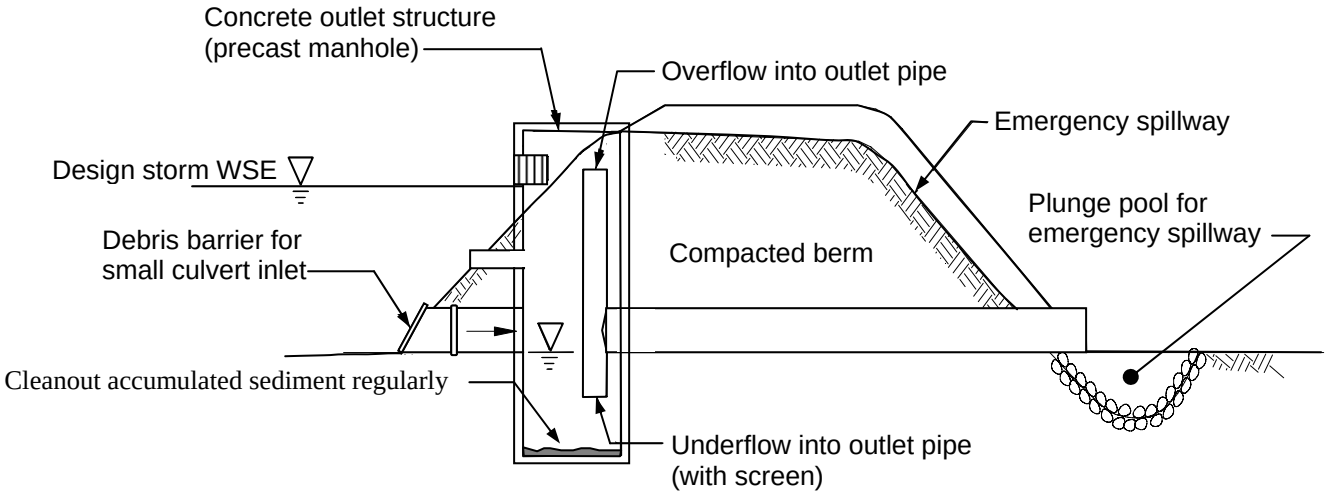

Figure ST-01-4
Outlet Structure — Alternative B
(includes water quality manhole with underflow)

A backslope drain has two purposes:

1. Safely convey storm water to the bottom of a detention basin slope.
2. Increase flow paths by channeling storm water into the detention basin far away from outlet structure.

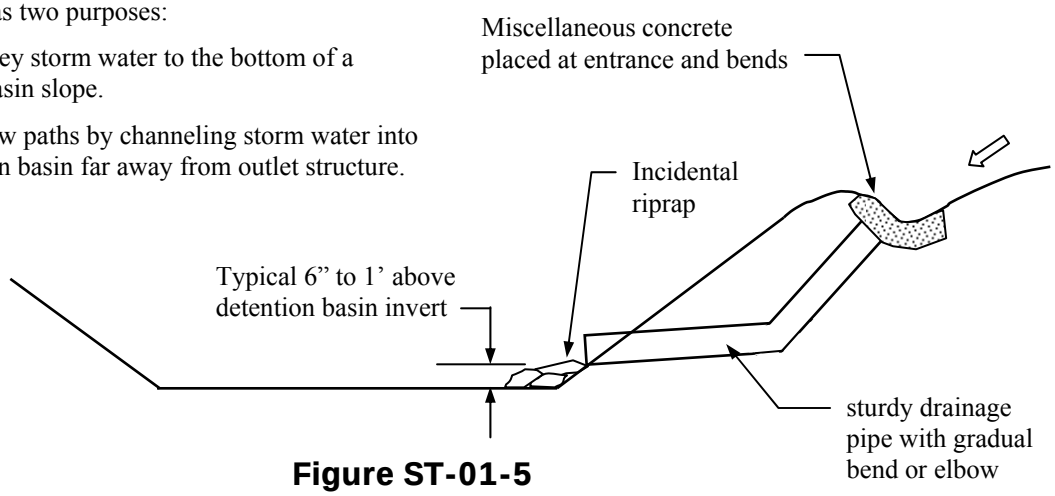

Figure ST-01-5
Typical Detail — Backslope Drain

Required Data for Detention Basin Design:

1. A map showing the predevelopment and post development tributary areas with computed area in acres.
2. Soil map (with legend and supporting data) to show the Hydrologic Soil Group for soils in drainage areas.
3. Land uses labeled and curve numbers computed for each tributary area.
4. Delineation of the longest flow path and Tc computations for each tributary area.
5. Predevelopment & post development hydrographs (NRCS Type II distribution for 24-hour storms).
6. Preliminary estimate for needed detention storage volume and for the first flush volume.
7. Storage vs. elevation—curve or rating table. Computed at regular intervals (not just interpolated).
8. Outflow vs. elevation—curve or rating table. Computed at regular intervals (not just interpolated).
9. Routed post development hydrographs for the volume of the two-year and five-year storms and the 10-year storm, showing no increase in peak outflows.
10. First flush orifice is sized to release the first flush volume over a minimum period of 24 hours.

Physical Layout for Detention Basin:

1. Side slopes that are 3:1 (H:V) or flatter, with BMPs to assist in fully establishing vegetation and preventing erosion — OR— Side slopes that are not steeper than 2:1 (H:V) with traversable access and additional BMP controls for fully establishing vegetation.
2. Minimum bottom slope of 2% (minimum 1% with paved invert). Not marshy, drains well.
3. Minimum 2:1 length to width ratio for basin. Maximize distance between inlets and the outlet structure.
4. Provide minimum freeboard of 12 inches between top of berm and the largest routed storm hydrograph.

Outlet Structure:

1. Concrete, block, or precast outlet structure (typical 6” wall thickness), with a concrete outlet pipe.
2. Minimum diameter of outlet structure is 36” to allow for access within the outlet structure.
3. Orifices and weirs are neatly formed/drilled to correct size. Durable metal weir plates are also acceptable.
4. Provide steps at 18” intervals if outlet structure is more than 3 feet high.
5. Provide lockable grates or other measures to prevent neighborhood children from playing in basin.
6. Provide gravel filtration box (or other durable low-maintenance device) for the first flush orifice.
7. Consider building a trash rack if debris and litter are likely to occur.

ACTIVITY: Wet Detention Basin	ST – 02

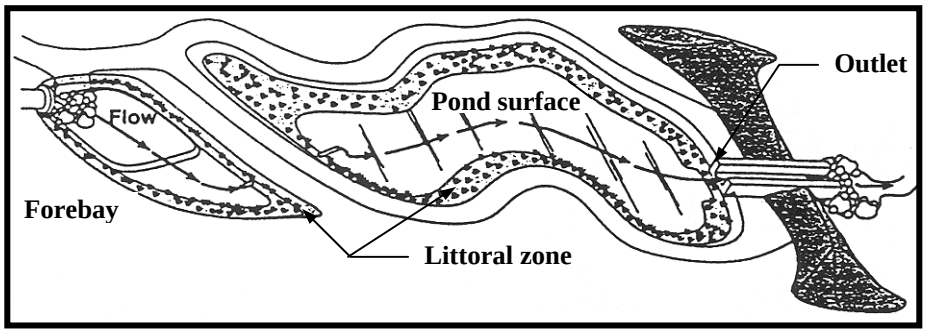

Targeted Constituents

● Significant Benefit ◗ Partial Benefit ○ Low or Unknown Benefit

● Sediment	● Heavy Metals	● Floatable Materials	◗ Oxygen Demanding Substances	
● Nutrients	● Toxic Materials	◗ Oil & Grease	◗ Bacteria & Viruses	○ Construction Wastes

Description

A wet detention basin is a very desirable method to satisfy both storm water detention and storm water quality requirements. It is applicable to most locations for which the contributing drainage area can support a permanent pool of water. A wet detention basin can be enhanced with other storm water treatment BMPs such as a pretreatment sediment forebay, baffle box, or storm water quality inlet.

This practice will provide a significant reduction in sediment and most types of pollutants. A wet detention basin is generally more effective than a dry detention basin at allowing sediments and other pollutants to completely settle out.

Selection Criteria

- The primary objective is to reduce the peak flow discharge and slow the storm water runoff response for a particular property or development, thus reducing flooding downstream. Procedures for preparing calculations are outlined in Volume 2, Chapter 8, Detention, of the Storm Water Management Manual (SWMM) including the correct use of Natural Resources Conservation Services (NRCS) Technical Release 55 (TR 55) for determining the required detention storage. Some example problems are included in Volume 2, Chapter 8 of the SWMM using complex spreadsheet analyses HEC-1 and HEC-HMS.

- The secondary objective is to remove suspended sediments, trash and debris, oil, grease, and other pollutants to protect the water quality of Memphis-area streams and channels. Wet detention basins not only allow physical settling of sediments and pollutants, but will also permit a limited amount of chemical mixing and interaction of dissolved nutrients and metals. Biological uptake will also occur to some degree within a wet detention basin. Dissolved contaminants are removed by a combination of physical adsorption to bottom sediments and suspended fine sediments, natural chemical flocculation, and uptake by aquatic plants.

- Wet detention basins are ideal for large regional detention facilities; larger drainage areas are likely to have a minimum base flow entering the system. Wet detention basins should be used if it is imperative to achieve high levels of particulate and dissolved contaminant removal.

- Wet detention basins also can supply multiple benefits for passive recreation during dry periods (recreational trails, ball fields, picnicking, bird-watching, wildlife habitat). Portions of a wet detention basin that are not wetted frequently can be attractively landscaped or used for other purposes. See Figure ST-09-1 for typical placement of various storm water treatment BMPs.

Design Criteria

A permanent detention basin design must be stamped by a professional engineer licensed in the state of Tennessee. The professional engineer must be qualified by education and experience to perform the necessary hydrologic and hydraulic calculations. A wet detention basin must be located and designed so that failure of the structure will not result in danger to human life, damage to personal property, inundation of public streets or highways, interruption of public services or utilities, or inconvenience to the general public.

- As the primary objective, dry detention basins must be designed to have adequate detention storage and outlet structures. See Volume 2, Chapter 8, Detention, of the SWMM for a discussion of detention design methods and formulas that are acceptable. Memphis and Shelby County require detention for two-year and five-year NRCS Type II rainfall storm design events. In addition, peak control of the 10-year NRCS Type II rainfall is required. The outlet structure must be made from durable concrete or masonry construction, and typically the outlet structure has multiple weirs and/or orifices to release the design storms at predevelopment rates.

- As the secondary objective, water quality is obtained through detaining the volume of the two-year and five-year rainfall events. The initial wave of storm water runoff is more likely to contain aerially deposited sediments, particulates from vehicles (such as incomplete combustion, dust from brake linings, tire particles), leaves, trash, cigarette butts, etc. In addition, vegetative lower lining detention basins will serve as a biofilter for first flush pollutants. The permanent pool storage volume should be designed with vegetation around the water surface and with riprap or nonerosive materials near inlet and outlet structures. Sediment and particulates continue to settle in the permanent pool storage volume for a few days after a rainfall event.

- Additional measures may be required to improve storm water quality, depending upon the nature of the land use and expected pollutants. Pretreatment of storm water runoff with a media filtration inlet or oil-water separator may be necessary. A trash rack for capturing floating debris is generally considered to be standard equipment for a storm water treatment

BMP. Storm water runoff that falls onto pavement and rooftops should be detained and treated in a manner that will reduce thermal impacts to streams, such as locating a detention basin away from sunlight by using trees or buildings as shade.

Design Approach

The major features of a wet detention basin are shown in Figure ST-02-1. It is essentially a small pond or lake with rooted wetland vegetation along the perimeter. The storage volume can be divided into two portions: 1) live detention storage and 2) permanent pool storage.

The live detention storage (above the lowest opening in the outlet structure) provides peak flood control, erosion control, and additional treatment benefits. The recommended design includes a sediment forebay (or even multiple forebays) wherever the storm water runoff enters the wet detention basin. Live detention storage can also include areas that are not frequently inundated; these areas may have multiple recreational uses as shown in Figure ST-09-1. The storage volumes necessary to limit peak flow discharges from a wet detention basin to predevelopment peak flows are computed using NRCS TR 55 methods as shown in Volume 2, Chapter 8, Detention, of the SWMM. Live detention storage volume is computed using the same methods for both dry detention basins and wet detention basins.

The permanent pool storage volume (below the lowest opening in the outlet structure) provides a quiescent volume for settling of particulate contaminants and the uptake of dissolved contaminants by aquatic plants between storms. Wetland vegetation (in the littoral zone) will improve removal of dissolved contaminants, reduce the formation of algae, stabilize the shoreline and reduce waves, provide dissolved oxygen and habitats for aquatic organisms, and create attractive landscaping. The permanent pool storage volume is computed to determine a minimum residence hydraulic time, which is the average time that a drop of water is expected to remain in the wet detention basin.

Location & Layout

Basic elements of a wet detention basin are illustrated in Figures ST-02-1 and ST-02-2. The recommended design includes the use of a sediment forebay or other storm water treatment BMPs to reduce sediment and pollutant loading. Principal elements in assessing the potential for a wet detention basin are the existing and proposed site conditions for soils, topography, and vegetation, and the amount of available base flow.

Design flow paths to minimize potential short-circuiting by locating the inlets as far away from the outlet structure as possible. The length-to-width ratio of a basin should be at least 2:1 (and preferably 3:1). If topography or aesthetics require the basin to have an irregular shape, increase the basin area and volume to compensate for dead spaces. Reduce velocity of incoming storm water with riprap or energy dissipaters.

Interaction with site utilities must be considered during preliminary design. Typical utilities include electrical, telephone, cable TV, water, sewer,

natural gas, petroleum, etc. These utilities may or may not be in a dedicated utility easement, so it is always necessary to conduct a careful site survey. Detention basins (including embankments) are not allowed over utility lines.

Detention basin access must be considered during preliminary design in order to allow for construction and maintenance. Detention basins that are not frequently inspected and maintained often become more of a nuisance than a beneficial part of a storm water management program. In particular, provide access for inspection and maintenance to the sediment forebay and to the outlet control structure. It may also be desirable to encourage or discourage public access to the detention basin (by using site grading, signs, fences, or gates). Additional safety elements include trash racks, grating over pipes and culverts, gentle side slopes whenever possible, increased visibility and/or lighting in residential areas, etc.

Small detention basins serving individual properties do not offer as many recreational benefits as community or regional detention basins would. Regional facilities can often be landscaped to offer recreational and aesthetic benefits. Jogging and walking trails, picnic areas, ball fields, and canoeing or boating are some of the typical uses. For example, portions of the facility for flood control of major design storms can be used for exercise areas, soccer fields, or football fields. Wildlife benefits can also be provided in the form of islands, buffer areas, or preservation zones. Figure ST-09-1 shows an example of a multiuse regional facility.

Volume and Size

The volume of a wet detention basin consists of two elements: the live detention storage (the upper portion of the basin representing detention capability) and the permanent pool storage volume (the lower portion of the basin representing storm water quality treatment). The live detention storage (which also includes the first flush volume) should be sized according to Volume 2, Chapter 8, Detention, of the SWMM, and also the procedures from NRCS TR 55 (reference 175). Detention computations should generally be checked and verified by performing routing computations.

The minimum permanent pool storage volume should have a hydraulic residence time of 14 days, based on average rainfall during the wettest month of the year. In general, a longer hydraulic residence time is desirable because it allows biological and chemical assimilation of nutrients and pollutants to continue for a longer time. In addition, since sediment removal and maintenance of a wet detention basin is very difficult and costly, additional sediment storage should be designed as part of the permanent pool volume.

Size the permanent pool volume of a wet detention basin using the following formula:

$$V_{pp} = A_T \; R$$

V_{pp} = permanent pool volume (acre-ft)
A_T = total tributary area (acres)
R = average 14-day rainfall (feet)

The average 14-day rainfall is computed using March as the wettest month of the year.

Grading

The maximum slope above the permanent pool storage volume shall generally be 4:1 (H:V) or flatter. This encourages a strong growth of vegetation on the side slopes and helps to prevent soil erosion. Steep slopes, particularly on embankments or other fill soils, contribute to soil erosion and thereby reduce or negate the effectiveness of a wet detention basin with respect to water quality. Vegetate the side slopes and basin bottom to the maximum extent practical. If side erosion is particularly severe, consider the use of soil stabilization or armoring techniques. Do not locate detention basins immediately above or below a steep slope or grade, because impounded water may create slope stability problems.

The littoral zone is an area of the detention basin that supports rooted wetland vegetation. The littoral zone should be 1 to 2 feet below the normal water level, with a gentle slope of 6:1 (H:V) or flatter. Typically the littoral zone is 10 feet wide. The remainder of the permanent pool storage volume may have slopes as steep as 2:1 (H:V); this portion of the wet detention basin is generally protected against rainfall, water velocities, and wave action so that erosion does not occur.

The minimum width for top of embankment is 5 feet. Allow for 10% settlement of embankment, unless the embankment is thoroughly compacted with vibratory equipment or sheepsfoot rollers. The top of embankment (after expected settlement) shall generally be at least 2 feet above the top of outlet structure and at least 1 foot above the peak 10-year water surface elevation. Compaction in the immediate area of the emergency spillway can be difficult, but is necessary.

Retaining walls may be used on one or more sides of a detention basin if properly designed. Analysis of a retaining wall should include effects of saturated soil behind the retaining wall, in addition to the usual design considerations of vehicle and structural loadings above the retaining wall. In general, concrete retaining walls should not face southward in order to reduce the potential for heating on hot summer days. Using a backslope drain (see Figure ST-01-5 for a detail) can increase the flow path lengths to prevent short circuiting of the detention basin.

Outlet Structure

Memphis and Shelby County require that a detention basin outlet structure must be constructed from concrete, masonry block, or other durable materials. The city and county do not allow metal CMP risers to be used as an outlet structure due to problems with crushing, flotation, and durability. A concrete outlet structure is preferable to a masonry block structure because it is sturdier and more durable. Provisions should be made for sufficient reinforcement and anchoring.

The specific flow-controlling elements of an outlet structure may include one or more of the following: a circular orifice, a noncircular orifice, a rectangular

weir, a trapezoidal weir, a triangular weir, a V-notch weir, culvert entrance control, or a riser overflow opening. The V-notch weir is an efficient combination of low maintenance requirements and a wide range of flow discharges. These types of controls for outlet structures are described at length Volume 2, Chapter 8 of the SWMM.

Figures ST-02-3 and ST-02-4 illustrate possible designs for the outlet structure. These details are only two possible ways to accomplish storm water detention and storm water quality control. The first flush volume is typically drained during a minimum time of 24 hours by using an orifice or orifices with a designed size. Maximum drain time should be less than 72 hours to allow for sufficient volume recovery prior to the next period of rainfall. Figure ST-02-5 shows an alternative outlet structure with a water quality manhole.

Other Design Elements

- A sediment forebay — to facilitate the cleanout of sediment, trash, debris, leaves, etc. The sediment forebay typically contains 5% to 10% of the total volume for a wet detention basin. It should be located at a point where velocities have dissipated, to allow large sediments and debris to settle out. A forebay can be separated from the remainder of a detention basin by several means: a lateral sill with rooted wetland vegetation, rock-filled gabion, rock retaining wall, or rock check dam placed laterally across the basin. The sediment forebay should be easily accessible so that it can be inspected and maintained.

- Public safety should be considered, particularly in residential areas. Avoid steep slopes and dropoffs; consider routes for escaping the detention basin if a person accidentally falls in. Provide fencing and signs in areas where children may potentially play, or in areas that have deeper water. Limit access to the outlet structure.

- Mosquitoes can be reduced by installing a steeper shelf transition at the water surface to reduce areas with water depths less than 12 inches. Small rock walls, gabions, or other structures may help to create this shelf transition. Habitats for the introduction of gambusia (mosquito fish) are also beneficial if the design also includes maintaining water levels for fish survival during the dry season. Water levels also need to be maintained during winter months for fish to survive the cold weather.

- Antiseep collars (around the outlet pipe) and cutoff clay layers (within the embankment) are usually necessary to reduce seepage. An antiseep collar should extend at least one pipe diameter from the culvert in all directions, with compacted clay backfill, using small mechanical tampers.

- Include trash racks or other debris barriers with a maximum opening size of 2” (and preferably 1”) on all outlet structures, except for any emergency spillway structures that are designed for a 25-year storm or greater return period. Trash racks that are placed at an angle to the direction of flow are somewhat less vulnerable to clogging.

- Provide means for vehicle access to the wet detention basin. Detention basins must be located in a maintenance easement so that city personnel have the right to inspect the facility. Maintenance easements that are not adjacent to a city right-of-way must also have an access easement, which allows for vehicle access without large trees or excessive vehicle grades.

- Include a skimmer, oil-water separator, or other type of storm water runoff pretreatment for detention basins with greater than 50 percent impervious surface or a potential for oil and grease contamination (such as vehicle fueling and maintenance facilities, in addition to large parking areas).

- An antivortex device for the outlet structure may be potentially needed for very large detention basins in areas where public access is not limited. The antivortex device may be a combination of vanes above the outlet structure or guide walls around the outlet structure that lessen the chance of humans drowning or reduce the potential for erosion and structural undercutting.

- Provide rooted vegetation at the pond perimeter to serve several functions. Rooted vegetation enhances the removal of dissolved pollutants and reduces the formation of floating algae. It provides some habitat for insects, aquatic life, and wetland wildlife. The littoral zone for rooted vegetation should be about 10 feet wide with a water depth of 1 to 2 feet. Vegetation in general slows flow velocities and increases settling.

- If placement of wetland vegetation along the perimeter is not feasible, consider the use of nonrooted wetland species (i.e., floating plants). Nonrooted vegetation is actually more effective than rooted vegetation in removing dissolved nutrients and metals. Nonrooted vegetation can be placed within floating containers to facilitate periodic removal and cleaning. Another alternative is a rock filter or bed to support nonrooted vegetation (similar to design of wastewater oxidation ponds).

Maintenance

- Inspect the wet detention basin regularly (several times a year) and particularly after heavy rainfall events. Record all observations and measurements taken. Perform any maintenance and repairs promptly. Remove debris and trash after storm events. Check outlet structure regularly for clogging.

- Remove sediment from forebay regularly to prevent resuspension or movement. The wet detention basin should be dredged or excavated when 10% of permanent pool storage volume has been lost. Sediment removal in a wet detention basin is a major effort requiring dewatering, difficult equipment access, wet soils, and some loss of wildlife and vegetation. Sediment may be permitted to accumulate if the detention basin volume has been overdesigned with adequate controls.

- Maintain a thick and healthy stand of vegetation. Mow or trim at regular intervals to encourage thick growth. Remove leaves, grass clippings, or sticks from the wet detention basin to prevent storm water pollution. Remove trees or nuisance vegetation as necessary in order to protect embankments. Repair banks and eroded areas.

- Reduce mosquitoes as necessary. Trim vegetation or alter water surface perimeter to reduce ponded depths that are less than 12 inches. Design of the wet detention basin may include a steeper depth transition to reduce shallow water depths less than 12 inches. Gambusia (mosquito fish) can also be placed in larger ponds if water levels are maintained to insure their survival during the dry season.

- A fountain may be desirable to increase the amount of dissolved oxygen in the water. Depths greater than 12 feet may develop anaerobic conditions, which is not desirable.

- If both the operational and aesthetic characteristics of a wet detention basin are not properly maintained, it will become an eyesore and a negative environmental impact. Vegetation needs to be trimmed or harvested. Ensure that repairs are made to walkways, picnic tables, signs, and public recreation equipment as needed.

Sediment Removal

A primary function of storm water treatment BMPs is to provide information on collecting and removing sediment. The sediment accumulation rate is dependent on a number of factors including watershed size, facility sizing, construction upstream, nearby industrial or commercial activities, etc. Sediments should be identified before sediment removal and disposal is performed. Special attention or sampling should be given to sediments accumulated from industrial or manufacturing facilities, heavy commercial sites, fueling centers or automotive maintenance areas, parking areas, or other areas where pollutants are suspected. Treat sediment as potentially hazardous soil until proven otherwise.

Some sediment may contain contaminants for which TDEC requires special disposal procedures. Consult TDEC–Division of Water Pollution Control (368-7939) if there is any uncertainty about what the sediment contains or if it is known to contain contaminants. Clean sediment may be used as fill material, hole filling, or land spreading. It is important that this material not be placed in a way that will promote or allow resuspension in storm water runoff. Some demolition or sanitary landfill operators will allow the sediment to be disposed at their facility for use as cover. This generally requires that the sediment be tested to ensure that it is innocuous.

Limitations

- A wet detention basin will require frequent inspection and maintenance. Trash, debris, leaves, and other large items should be removed from the detention basin following each rainfall event. If upstream erosion is not

properly controlled, wet detention basins can be maintenance intensive with respect to sediment removal, nuisance odors, insects, and mosquitoes, etc.

- A wet detention basin may not have sufficient vegetation on the slopes and bottom to prevent erosion and pollutant resuspension. Vegetation must be maintained and cut at adequate intervals.

- A wet detention basin that impounds more than 30 acre-feet of volume (and minimum 6 feet high) or that is higher than 20 feet (and minimum 15 acre-feet of volume) is subject to the Tennessee Safe Dams Act of 1973 and as amended by law. The Safe Dams Act is administered by the TDEC Division of Water Supply; further information on design standards, regulations and permit applications is available at the TDEC Web site:

  http://www.state.tn.us/environment/permits/safedam.php

- Wet detention basins may not be feasible in very dense urban areas. Do not locate detention basins on steep unstable slopes. Impervious soils such as clay are desirable to maintain water levels during the summer or other dry periods.

References **28, 31, 32, 33, 37, 45, 46, 64, 68, 72, 73, 76, 77, 84, 86, 88, 106, 133, 140, 142, 143, 147, 153, 154, 166, 175, 180** (see BMP Manual Chapter 10 for list)

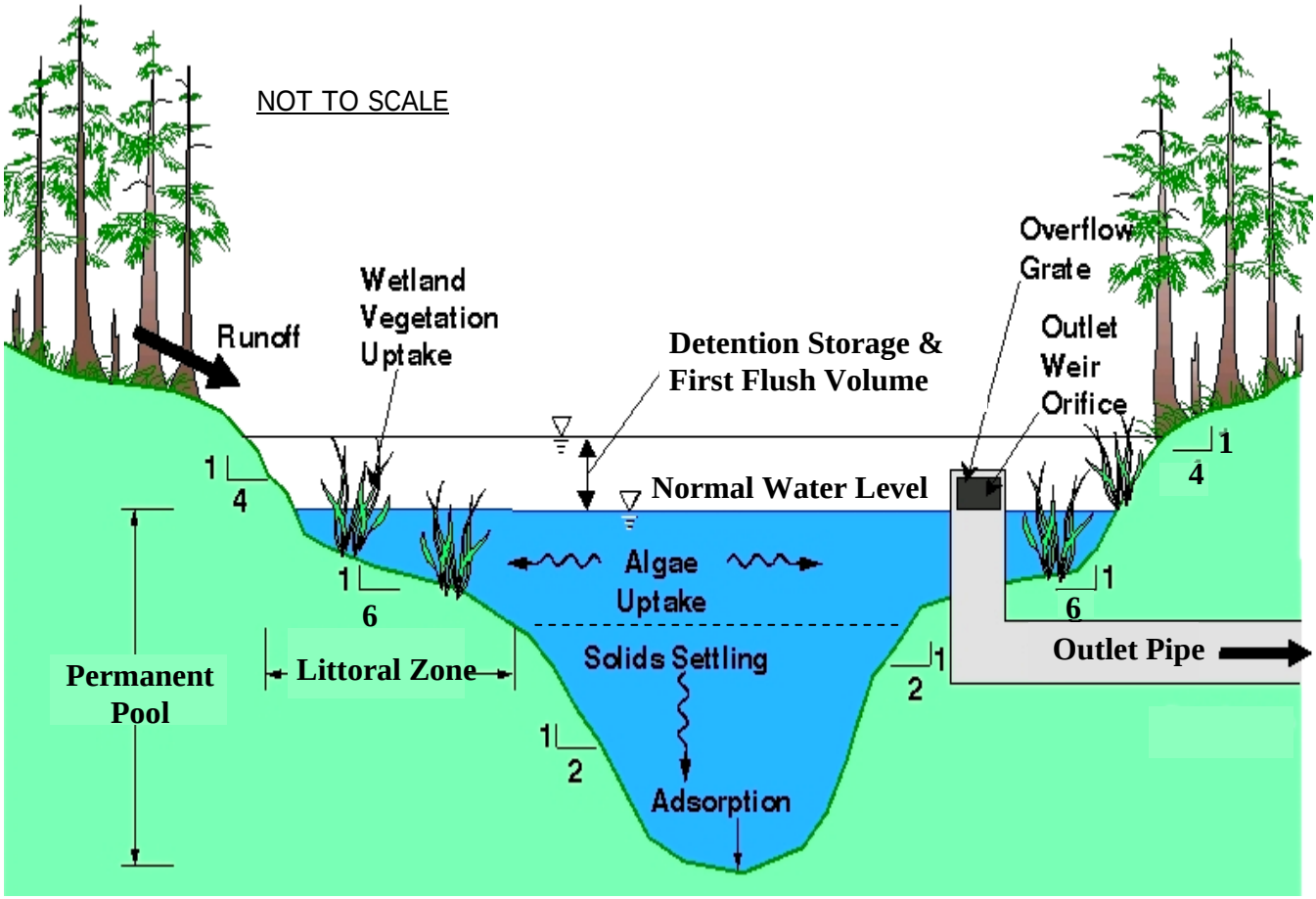

Figure ST-02-1
Schematic of Wet Detention Basin

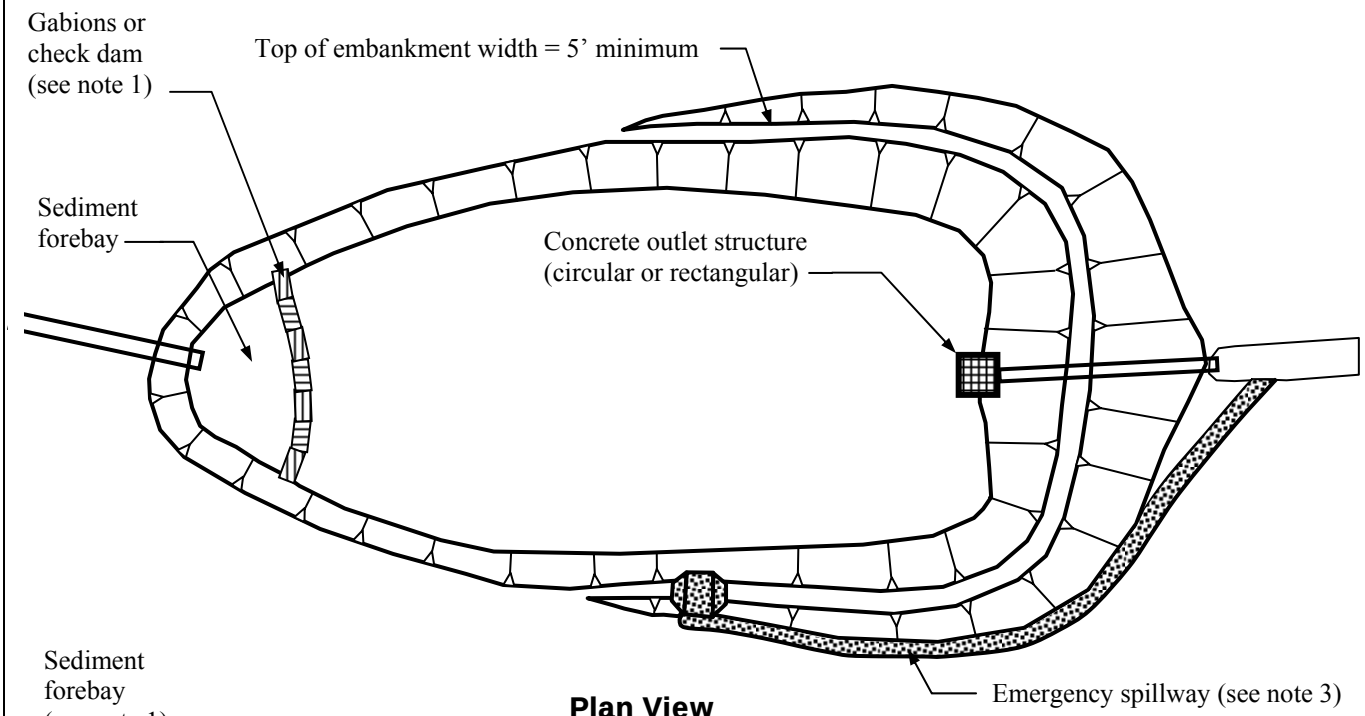

Plan View

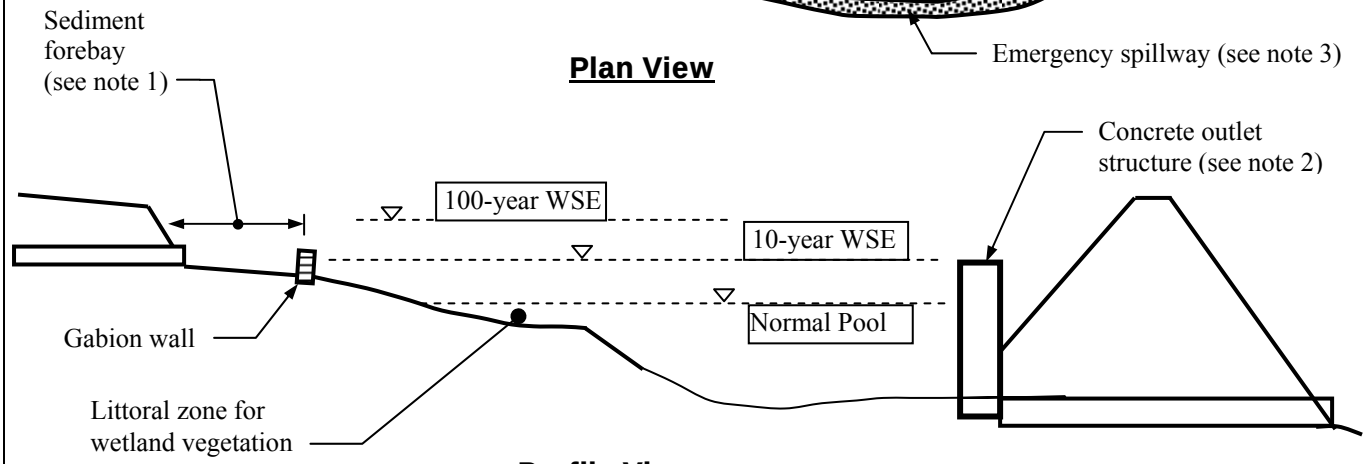

Profile View

NOT TO SCALE

Notes:

1. A sediment forebay can be constructed from gabions, rock check dams, or a separate berm with culvert. A sediment forebay can facilitate the capture and cleanup of coarse sediments, debris, and trash.

4. The outlet structure typically has orifices or weirs at computed elevations that will release the volume of the two-year, five-year, and 10-year storms at the specified predevelopment peak flow rates.

5. The emergency spillway is generally constructed on natural ground or excavated areas (rather than fill soils) to reduce the potential for erosion and washout.

Figure ST-02-2
Typical Wet Detention Basin Layout

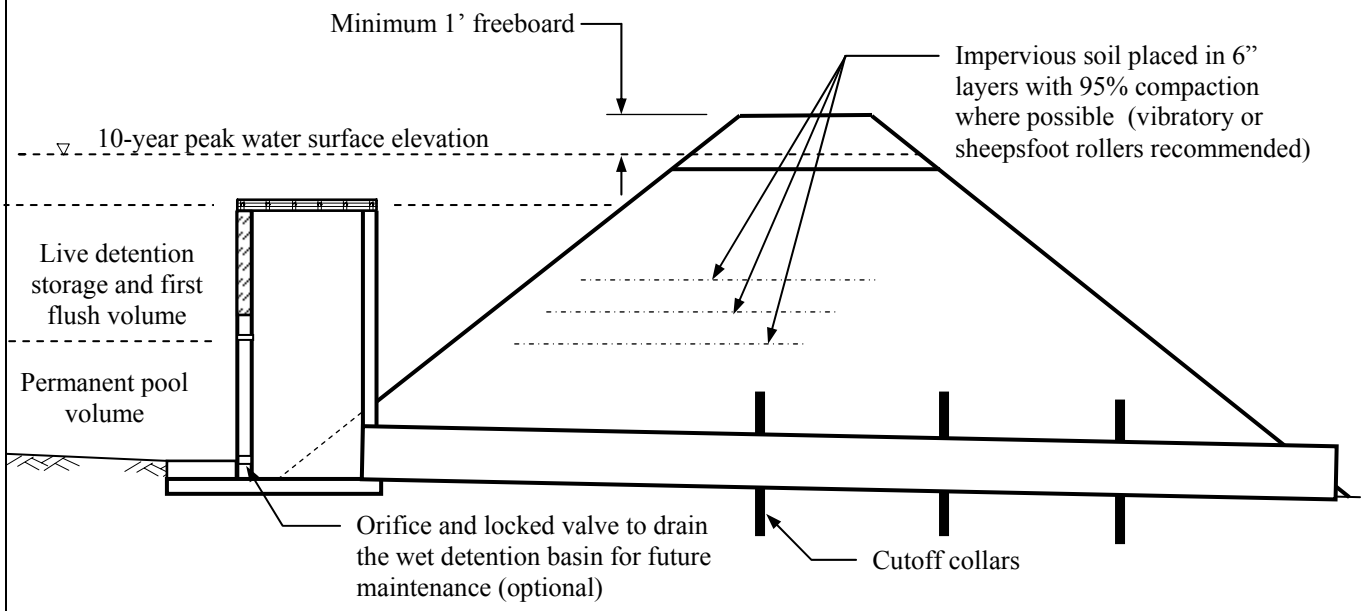

Typical Outlet Structure (V-Notch)

NOT TO SCALE

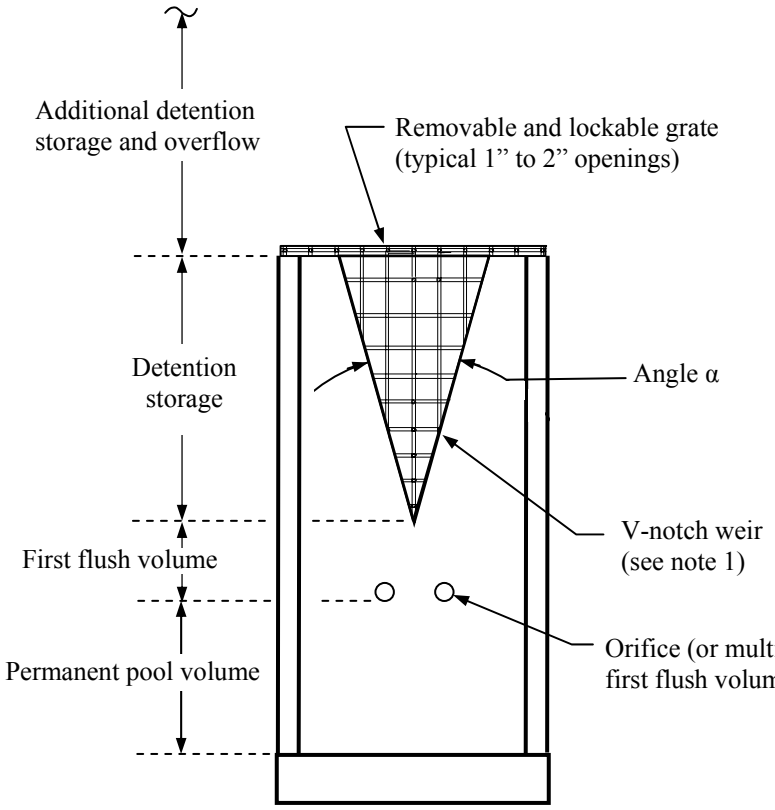

Notes:

1. This example of a typical outlet structure shows a V-notch weir, which should be sized to release the volume of the two-year, five-year, and 10-year storms peak flows at the predevelopment rates.

2. The first flush volume orifice or orifices are sized to release the first flush volume over a period from 24 to 72 hours. Protect the orifice from clogging with a trash rack.

Figure ST-02-3
Typical Outlet Structure
(shown with a V-notch weir)

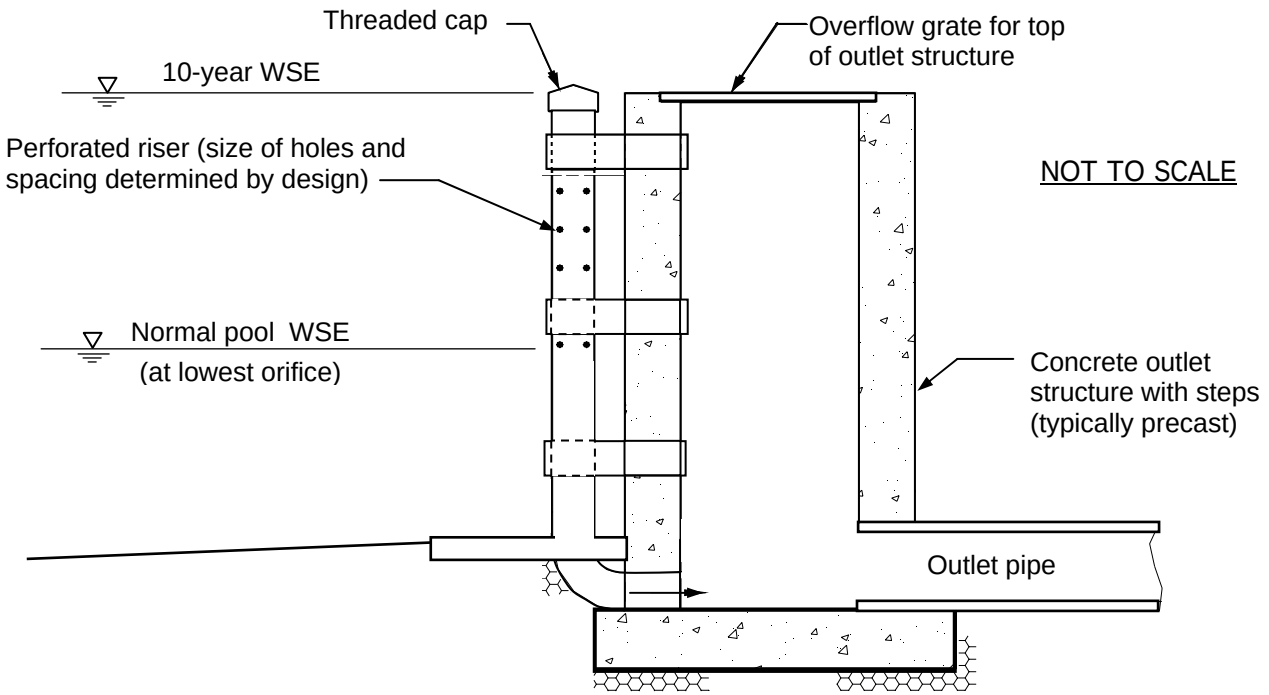

Note:

This type of outlet structure may be used if there is adequate protection and structural support for the perforated riser.

Figure ST-02-4
Outlet Structure — Alternative A

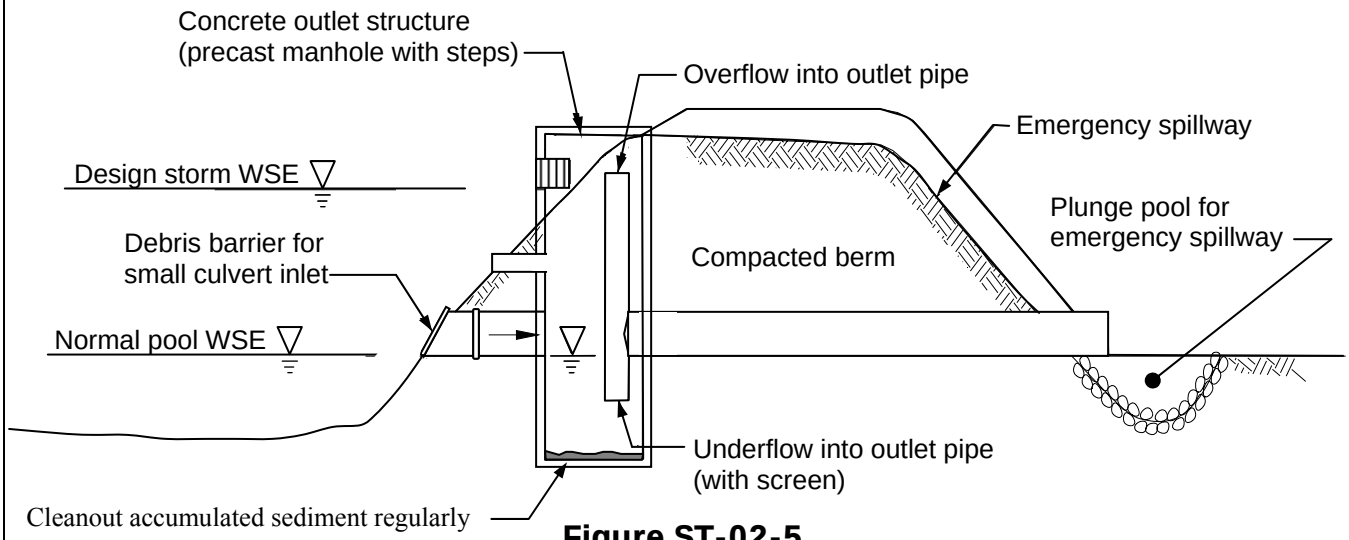

Figure ST-02-5
Outlet Structure — Alternative B
(includes water quality manhole with underflow)

ACTIVITY: Infiltration Systems and Methods	ST – 03

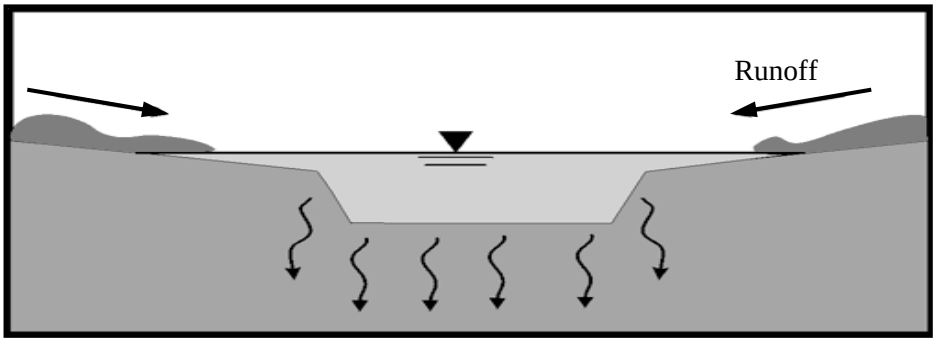

Targeted Constituents				
● Significant Benefit		◗ Partial Benefit	○ Low or Unknown Benefit	
● Sediment	◗ Heavy Metals	◗ Floatable Materials	◗ Oxygen Demanding Substances	
◗ Nutrients	◗ Toxic Materials	◗ Oil & Grease	○ Bacteria & Viruses	○ Construction Wastes

Description

This BMP covers various methods, loosely grouped as infiltration systems, in which storm water runoff is infiltrated into the ground rather than discharged to a surface channel. These systems include infiltration basins; infiltration trenches, drywells, and vaults; and porous pavement. Infiltration rates in most of the Memphis area are typically poor due to clay soils. Some areas in eastern Shelby County that are currently undeveloped are located on large sand lenses that may allow for use of infiltration systems and methods.

Suitable Applications

- Infiltration basins and infiltration trenches may be used for storm water quality and storm water detention at small project sites only if soil, geologic, and groundwater conditions are suitable. Soils must have adequate infiltration rates as measured or tested in the field. No unfavorable geologic conditions shall be present that would indicate sinkholes or underground passageways.

- Drywells and vaults are suitable for draining small impervious surfaces, such as parking lots or residential rooftops, for which the adjacent pervious area has soils with adequate infiltration rates.

- Porous pavements make a generally impervious surface into a semi-pervious surface and do not usually function as a true infiltration system. There is a basic conflict for nonsandy soils to both support vehicle loads and allow water to infiltrate. Porous pavements should be restricted to light traffic conditions, such as residential driveways and overflow parking lots, without heavy truck use.

- Natural sinkholes (or other evidences of karst topography and drainage) are not considered to be infiltration systems for use in treating storm water quality or in providing storm water detention. In general, storm water drainage may continue to flow to a natural sinkhole at a rate that is representative of natural undeveloped conditions. No unusual or unfavorable geologic conditions shall be present near the sinkhole that

indicates subsidence, piping, increased limestone dissolution, potential collapse, or other safety concerns.

Approach

Infiltration can be a very desirable method of storm water treatment for land uses that do not heavily pollute storm water runoff. For instance, established residential areas typically have less pollution than industrial and commercial areas. The primary physical conditions necessary for infiltration are: 1) permeable soils that have not been compacted or graded, and 2) low groundwater tables. Storm water runoff from parking lots or buildings should be pretreated with a water quality inlet, oil-water separator, grass swale, or other type of storm water treatment BMPs. The measures listed in this BMP can be informally grouped into two categories:

- Larger amounts of storm water runoff from a project site that are ponded and then forced to infiltrate (e.g., infiltration basin or infiltration trench).
- Smaller amounts of storm water runoff from selected impervious areas that are given an opportunity to infiltrate (e.g., drywell, dry vault, or porous pavement).

It is very important to protect the natural infiltration rate of suitable soils by only using lightweight equipment and construction procedures that minimize or eliminate compaction. In addition, prevent erosion and sediment transport from occurring upstream of an infiltration basin or other infiltration system. Inspect frequently for clogged soils and for ineffective infiltration rates. Improperly functioning infiltration systems must be replaced by other storm water treatment BMPs that are capable of providing water quality treatment.

Maintenance can be difficult and costly for infiltration systems, with a potential for high maintenance costs due to clogging. Maintenance costs and site access should be carefully considered prior to design. Pretreatment of storm water runoff may reduce maintenance costs by capturing coarse sediments and floatable materials in a smaller structure that can be more easily cleaned. All infiltration systems should be inspected several times the first year and at least twice a year thereafter. Maintain records of inspections and maintenance performed.

Overview of Infiltration Theory

The recommended minimum infiltration rate is at least 0.5 inches per hour, but may depend on type of infiltration system and the desired water quality treatment involved. Drawdown should occur within 72 hours using a safety factor of 2.0 to account for wet-weather water table conditions. An infiltration basin or trench must have at least 3 feet of separation from seasonal high groundwater. Coarse soils are not as effective in filtering groundwater; therefore, provide at least 6 to 8 feet separation from seasonal high groundwater for sand and gravel soils.

The overall degree of water quality treatment achieved by infiltration is a function of the amount of storm water that is captured and infiltrated over time. Minimum infiltration storage is generally required to be the first flush volume (the first 0.5" of storm water runoff from the entire contributing area). Consideration may be given to the following formula for 85% volume capture for the average rainfall event volume, with a minimum drain time of 12 hours, if there are extenuating circumstances such as impervious runoff from an adjoining property. Longer drain times require a larger capture volume.

$$V = (B)\ (C)\ (A)\ (P_m / 12)$$

V	=	storm water runoff capture volume (acre-feet)
B	=	regression constant from least-square analysis = 1.312 (for 85% runoff volume capture ratio with a 12-hour drain time)
C	=	watershed runoff coefficient (dimensionless)
A	=	watershed area (acres)
P_m	=	mean storm precipitation volume

Typical infiltration rates are shown in Table ST-03-1. The U.S. Department of Agriculture (USDA) soil texture classification is based upon the following definitions:

	Approximate size	**Rough description**
Gravel	> 2 millimeters (mm)	> No. 8 sieve or so
Sand	0.05 mm to 2 mm	> No. 200 sieve
Silt	0.002 mm to 0.05 mm	Little plasticity or cohesion
Clay	< 0.002 mm	Can be rolled and compressed

For preliminary design, infiltration rates may be estimated using a published soil survey. However, final design must include soil gradation testing and measurement of unsaturated vertical infiltration rates in the field by the double-ring infiltrometer test. This test is not appropriate for clay soils or other soils that clearly appear to be unsuitable for infiltration methods. The allowable infiltration rate is 0.5 inches per hour, although an infiltration rate of 1 inch per hour is highly recommended. Table ST-03-1 shows that soils with a hydrologic soil group of C or D will not have sufficient infiltration rates.

Another well-known method of categorizing soils and evaluating soil properties is by the Unified Soil Classification System (USCS). The following soil groups are generally acceptable as good soils for infiltration:

SW	Well-graded sands and gravelly sands, little or no fines
SP	Poorly graded sands and gravelly sands, little or no fines
SM	Silty sands, sand-silt mixtures

Table ST-03-1
Typical infiltration Rates from USDA Soil Texture

	USDA Soil Texture	Typical Water Capacity (inches per inch of soil)	Typical Infiltration Rate (inches per hour)	Hydrologic Soil Group
*	Sand	0.35	8.27	A
*	Loamy sand	0.31	2.41	A
*	Sandy loam	0.25	1.02	B
*	Loam	0.19	0.52	B
	Silt loam	0.17	0.27	C
	Sandy clay loam	0.14	0.17	C
	Clay loam	0.14	0.09	D
	Silty clay loam	0.11	0.06	D
	Sandy clay	0.09	0.05	D
	Silty clay	0.09	0.04	D
	Clay	0.08	0.02	D

* — Suitable for infiltration with typical 6′ to 8′ separation from seasonal high groundwater

** — Suitable for infiltration with at least 3′ separation from seasonal high groundwater

Design Guidelines

Infiltration Basin

Infiltration basins may be used for storm water quality and storm water detention at small project sites only if soil, geologic, and groundwater conditions are suitable. Soils must have adequate infiltration rates as measured or tested in the field. No unfavorable geologic conditions shall be present that would indicate sinkholes or underground passageways. Unless adequate engineering documentation is submitted, an infiltration basin must be located at least 100 feet away from any drinking water well, septic tank, or drainfield. It is also recommended that an infiltration basin should not be located near building foundations, buildings with basements, major roadways, wetlands, streams, or potentially unstable slopes and hillsides.

In general, infiltration basins are not effective in the Memphis area due to clay soils and shallow bedrock conditions. Smaller infiltration systems (trenches or drywells) may be applicable if local soil conditions allow. Avoid steep slopes or other geologic conditions that could potentially be made unstable by infiltrating water into the ground.

Figure ST-03-1 shows a typical infiltration basin. Pretreatment is highly recommended for areas with fine-grained soils, dust, sediment, debris, or other materials with the potential to clog the soils of an infiltration basin. Design an emergency overflow or a bypass for larger storms (using overland relief swales or possibly even street drainage in the case of 100-year floods).

The criteria in Table ST-03-2 (taken from reference 32) can be used to make comparative evaluations if there is more than one potential site for an infiltration system. A score of 20 or below is definitely unsuitable for use as an infiltration basin. A score of 30 or more indicates an adequate site for an infiltration basin.

Table ST-03-2
Comparative Evaluations of Potential Infiltration Sites

A. Ratio of tributary-connected impervious area (A_{IMP}) and the infiltration area (A_{INF}):

- $A_{INF} > 2\ A_{IMP}$ 20 points
- $A_{IMP} < A_{INF} < 2\ A_{IMP}$ 10 points
- $0.5\ A_{IMP} < A_{INF} < A_{IMP}$ ∏ 5 points

B. Nature of surface soil layer:

- Coarse soils with low ratio of organic material ∏ 7 points
- Normal humus soil 5 points
- Fine-grained soils (silt or clay) 0 points

C. Underlying soil layer:

- If the underlying soils are coarser than surface soil, assign the same number of points as for the surface soil layer assigned under item A above.
- If the underlying soils are finer grained than the surface soils, then use:
  - — Gravel, sand, or coarse glacial till ∏ 7 points
  - — Silty sand or loam ∏ 5 points
  - — Fine-grained soils (silt or clay) ∏ 0 points

D. Slope of the infiltration surface:

- Slope < 7% ∏ 5 points
- 7% < slope < 20% ∏ 3 points
- Slope > 20% ∏ 0 points

E. Vegetation cover:

- Healthy natural vegetation cover 5 points
- Lawn is well established 3 points
- Lawn is new 0 points
- No vegetation, bare ground 5 points

F. Degree of traffic on infiltration surface:

- Little or no foot traffic 5 points
- Average foot traffic (park, lawn) 3 points
- Much foot traffic (playing fields) 0 points

The infiltration basin volume should be sized to handle at least 85% of the average annual runoff, using the formula for volume capture (as discussed previously). The maximum allowable depth should be calculated using a safety factor of 2.0 to represent the uncertainty of infiltration due to construction methods and potential clogging:

Maximum ponding depth = (24 hours) x (infiltration rate)/(factor of safety)

Minimum surface area = (required volume)/(maximum ponding depth)

An infiltration basin should be excavated by a backhoe or excavator with adequate reach to operate from outside the basin. Side slopes should typically have 5:1 side slopes or flatter in order to minimize soil erosion. The bottom slopes should be as flat as possible. Sodding may help to quickly establish dense grass on the slopes, low-flow channels, basin entrance, and emergency spillway. Do not plant trees or woody vegetation within the infiltration basin.

An observation and sampling well (typically a perforated polyvinyl chloride (PVC) pipe riser, 6″ diameter, threaded cap) should be installed to allow for periodic monitoring and testing. Installation of a PVC riser may occur during the initial geotechnical investigation and then be modified during the construction of the infiltration basin. Prevent surface water runoff from using the riser to gain direct access to the groundwater table, particularly in areas with high pollution potential such as industrial facilities, parking lots, roadways (due to truck spills or deicing salts), major utility lines, etc.

For infiltration basins treating less than a few acres of pavement, pretreatment can usually be accomplished with a catch basin and a submerged outlet. The diameter and depth of the sump in the catch basin should be at least four times the diameter of the outlet pipe to the infiltration system (reference 66). Grass swales can also be used, although they may not be feasible in industrial sites, which tend to be fully utilized.

Inspect and repair infiltration basins at least twice a year. Remove sediment and debris as necessary. Do not allow heavy equipment or vehicles within the infiltration basin by using physical restrictions such as a fence or gate. Do not allow heavy foot traffic (as would be typical for a soccer or football field) within the infiltration basin area. Maintenance must also include regular mowing and removal of trees.

Infiltration Trench

An infiltration trench essentially has the same design characteristics as an infiltration basin, except that part of the storm water runoff storage is located within a gravel trench. The volume available for water storage is found by multiplying the total gravel volume by the porosity (η). Typical details for an infiltration trench are shown in Figure ST-03-2 (for surface drainage) and Figure ST-03-3 (for rooftop drainage). The bottom of the infiltration trench should be located at least 3 feet above the seasonal high groundwater table. There are provisions for emergency overflow in both details.

At a minimum, the infiltration trench should have adequate volume to treat the first flush (which is the first 0.5″ of storm water runoff from the entire contributing area). Infiltration trenches may be used around the perimeter of parking lots, between subdivision lots, or along medians or roadside swales. An infiltration trench does not have organic soil layers or surface vegetation to trap some types of pollutants. A trench may be

ineffective for soluble pollutants such as hydrocarbons, nitrates, salts, or organic compounds.

An infiltration trench should have an observation and sampling port, to assist in cleanout and to check water quality and groundwater levels. Geotextile fabric should be selected on the basis of durability, with an adequate opening size to resist clogging. Use clean washed aggregate (little or no fines). Do not compact the trench bottom or the aggregate; protect the area from heavy equipment and traffic by physical means.

Maintenance considerations should include the possibility of replacing an infiltration trench every 5 years, as the gravel and geotextile fabric will eventually become clogged and cease to function. Clogging may also occur at the bottom of the trench, along the gravel/soil interface. Clogging will occur even faster if there are fine silts, oil and grease, fertilizers, and other materials present in storm water runoff. Do not allow trees or other woody vegetation to become rooted along an infiltration trench. Inspect operation and recovery of infiltration trench at least a few times a year.

Drywell or Dry Vault

A drywell or dry vault can be used to infiltrate storm water runoff from small areas of impervious runoff, such as roofs or parking lots. The designer should be very careful to avoid adverse impacts to foundations, basements, unstable slopes, hillsides, septic tanks, or utility lines, etc. A small pretreatment chamber with a screen is recommended in many instances to handle leaves (roofs) or trash and sediment (parking lots).

A typical drywell adjacent to a house foundation is shown in Figure ST-03-4 (without a pretreatment chamber). A dry vault (larger than a drywell) can be constructed using masonry blocks and a poured concrete lid to hold a larger volume of storm water runoff. Inspect the drywell or dry vault on a regular basis. Maintenance plans should include provisions to repair or replace this type of structure after five years or so.

Porous Pavement

Porous pavements are not actually considered as a true infiltration system unless there is a mechanism for ensuring that captured water is vertically transmitted through the soil into groundwater. Otherwise, porous pavements shall generally be analyzed as a gravel surface (road or parking lot) with normal runoff coefficients used for the Rational formula or for National Resources Conservation Service methods of drainage design.

Porous pavement is usually a modular pavement grid, although pour-in-place concrete can be made into porous pavement also. See Figure ST-03-5 for a few types of porous pavement (taken from reference 45) for which grass is allowed to grow between the grids. A less durable variation can be made with

bricks, placed on sand bedding, and filled in with soil, with approximately 50% brick surface. Porous pavements should be restricted to light traffic conditions without heavy trucks. Porous pavements are particularly recommended for residential driveways or overflow parking lots.

Porous pavements are likely to absorb large amounts of pollutants from automobiles, such as heavy metals and petroleum products. Porous pavements should be cleaned regularly using methods that will not dislodge the grass, sand, or soil from between the concrete grids. Collect wash water and dispose properly to avoid washing pollutants downstream.

Maintenance

- Inspect and observe the infiltration system several times during the first year, particularly after heavy rainfall events. Use observation wells and cleanout ports to monitor water levels and drawdown times. Record all observations and measurements taken. Perform any maintenance and repairs promptly.

- Inspect the infiltration system annually thereafter, and after extreme rainfall events. If storm water does not infiltrate within 72 hours after a storm, it is generally time to clean, repair, or replace the facility. Remove debris and sediment at least annually to avoid high concentrations of pollutants and loss of infiltration capacity.

- The primary objective of maintenance and inspection activities is to ensure that the infiltration facility continues to perform as designed. Regular inspection can substantially lengthen the required time interval between major rehabilitations.

- Prevent compaction of the infiltration surfaces by physical controls such as gates or fences. Maintain dense grass vegetation for infiltration basins. Use rotary tillers on infiltration surfaces when needed to restore infiltration capacity and to control weed growth.

Sediment Removal

A primary function of storm water treatment BMPs is to collect and remove sediments. The sediment accumulation rate is dependent upon a number of factors including watershed size, facility sizing, construction upstream, and nearby industrial or commercial activities, etc. Sediments should be identified before sediment removal and disposal is performed. Special attention or sampling should be given to sediments accumulated from industrial or manufacturing facilities, heavy commercial sites, fueling centers or automotive maintenance areas, parking areas, or other areas where pollutants are suspected. Treat sediment as potentially hazardous soil until proven otherwise.

Some sediment may contain contaminants for which the Tennessee Department of Environment and Conservation (TDEC) requires special disposal procedures.

Consult TDEC — Division of Water Pollution Control (368-7939) if there is any uncertainty about what the sediment contains or if it is known to contain contaminants. Clean sediment may be used as fill material, hole filling, or land spreading. It is important that this material not be placed in a way that will promote or allow resuspension in storm water runoff. Some demolition or sanitary landfill operators will allow the sediment to be disposed at their facility for use as cover. This generally requires that the sediment be tested to ensure that it is innocuous.

Limitations

The four major concerns with infiltration systems are clogging, potential impact on other structures and properties, accumulation of heavy metals, and the potential for groundwater contamination.

- Clogging and high maintenance costs are very likely to occur in fine soils that are marginally allowable for infiltration rates. Erosion control is extremely important to prevent clogging; infiltration systems fail if they receive high sediment loads. Perform regular maintenance and inspections to minimize the potential for clogging and loss of infiltration capacity. Pretreatment is highly recommended for storm water runoff from many land uses, prior to discharging to an infiltration system. Erosion of the side slopes is a major factor in clogged infiltration basins.

- Infiltration systems are not appropriate for areas with high groundwater tables, steep slopes, lots of underground infrastructure, and nearby buildings.

- Heavy metals are likely to settle in any of the storm water treatment BMPs, but particularly for infiltration systems (which have the lowest velocity). High levels of heavy metals have been observed in other states where adequate maintenance was not performed. Toxic levels are not likely to be exceeded, but the sediments will need to be handled as hazardous waste after a few years of neglect.

- There is a higher risk of groundwater contamination in very coarse soils (references 2 and 79). It is highly recommended that a monitoring and inspection program should be used to verify that no contamination occurs. Infiltration systems may not be appropriate where there is significant potential for hazardous chemical spills.

References

2, 3, 28, 31, 32, 33, 42, 44, 45, 49, 51, 56, 62, 66, 69, 71, 77, 79, 88, 101, 104, 109, 121, 130, 163, 166 (see BMP Manual Chapter 10 for list)

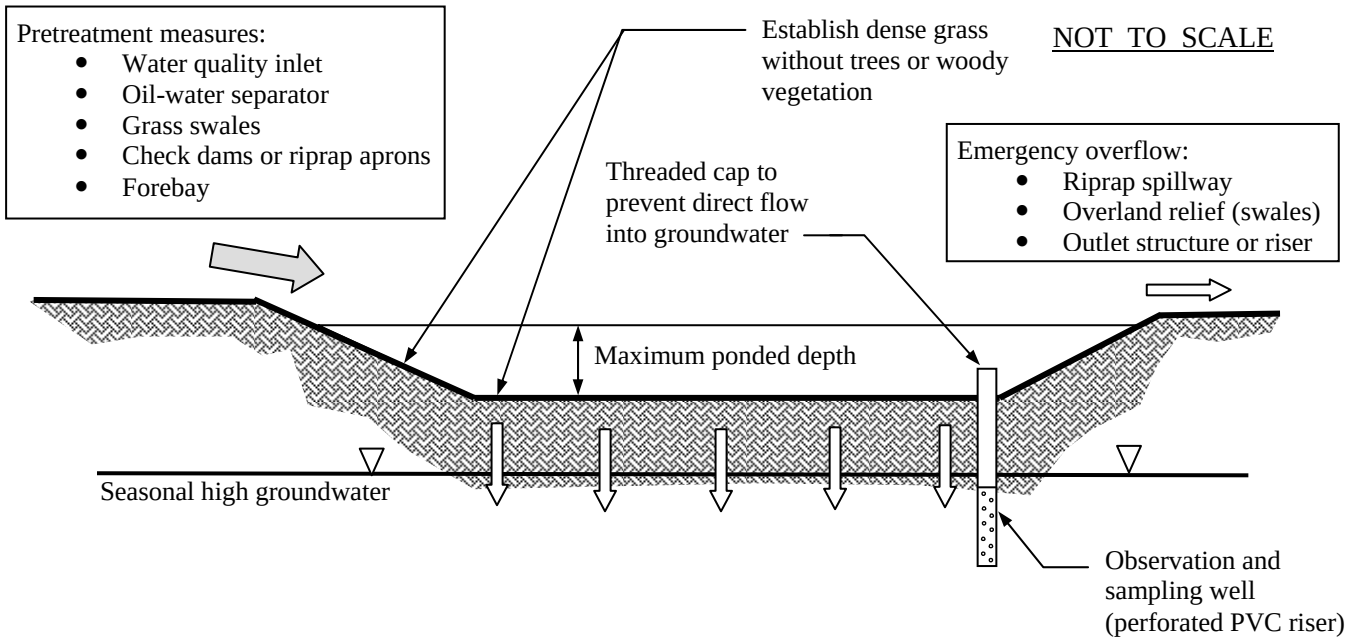

Figure ST-03-1
Typical Infiltration Basin

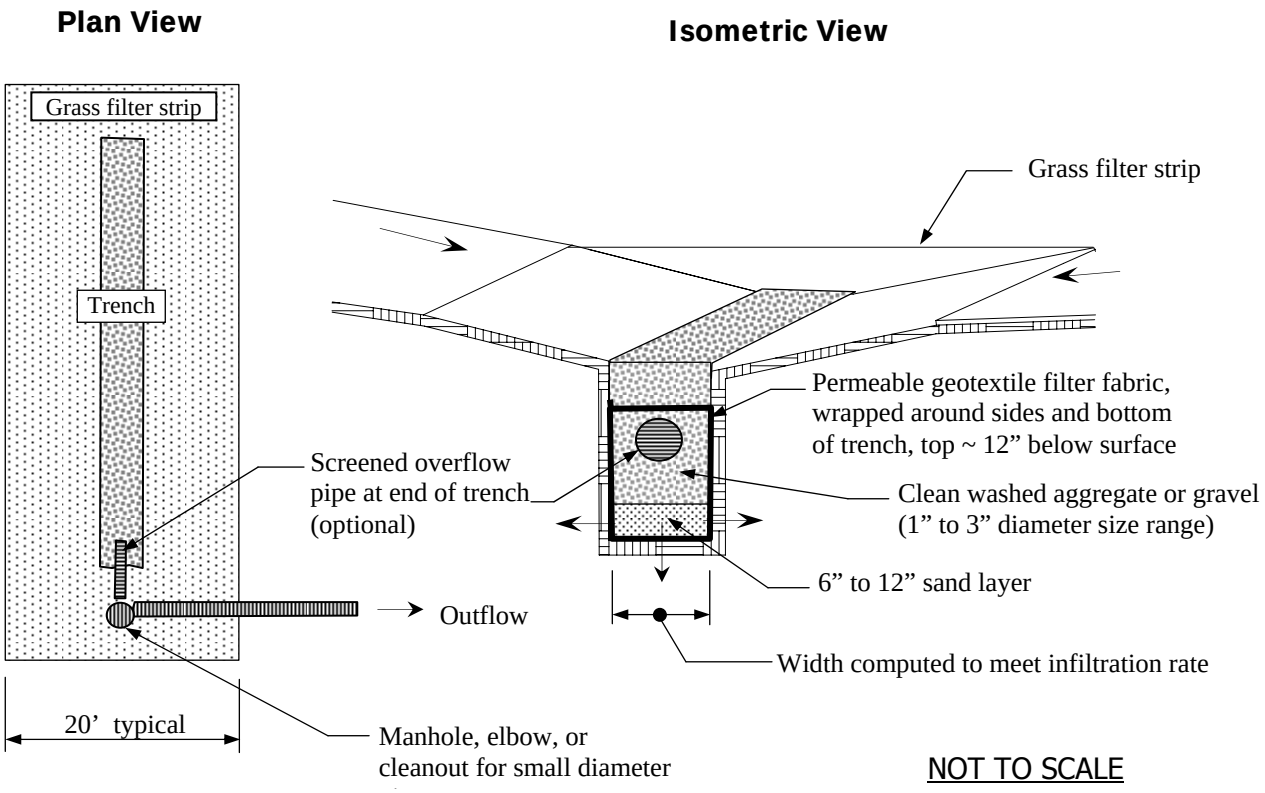

Figure ST-03-2
Typical Infiltration Trench (with Surface Drainage)

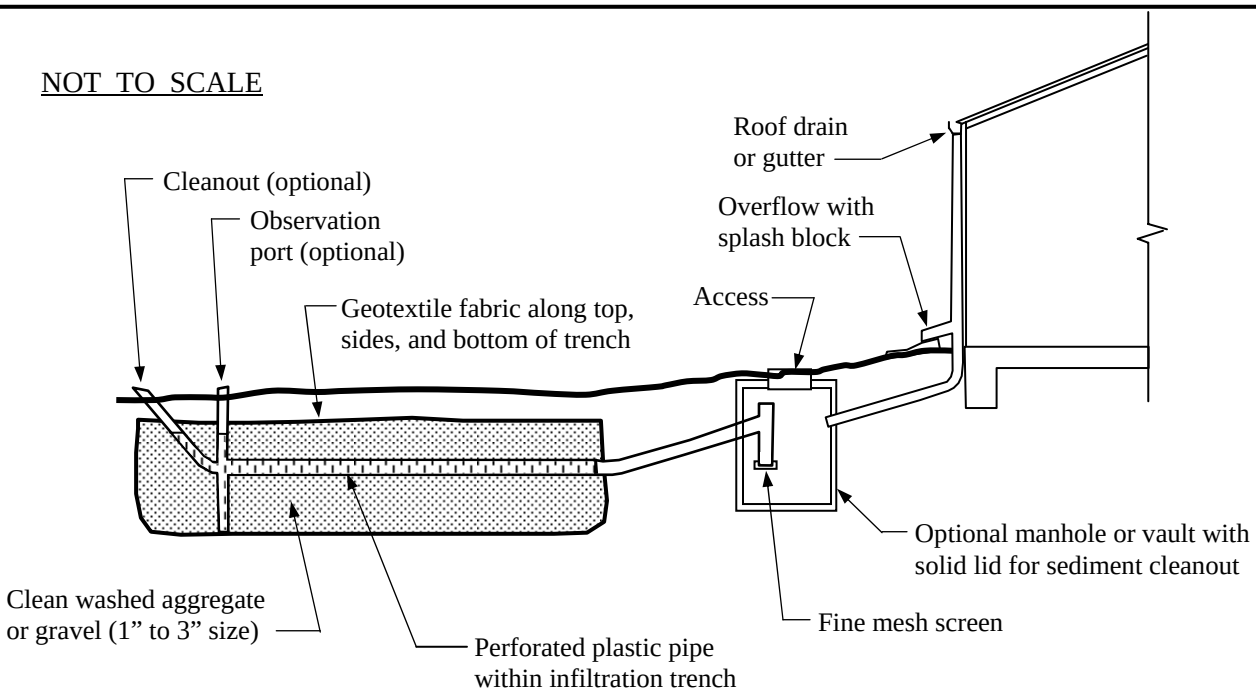

Figure ST-03-3
Typical Infiltration Trench (with Rooftop Drainage)

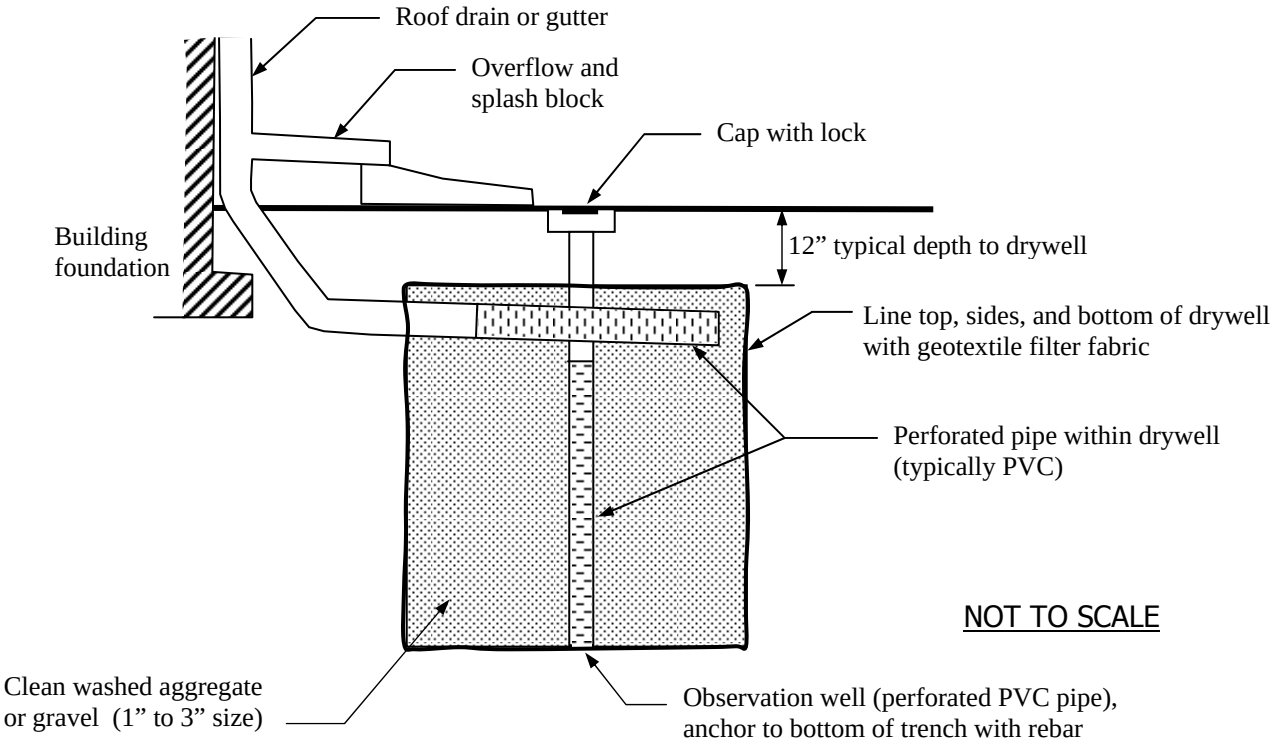

Figure ST-03-4
Typical Drywell (with Rooftop Drainage)

NOT TO SCALE

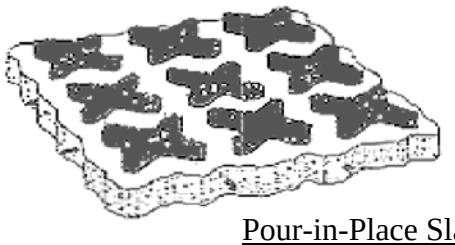

Pour-in-Place Slab

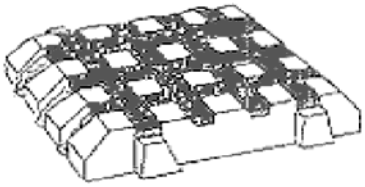

Castellated Unit

Lattice Unit

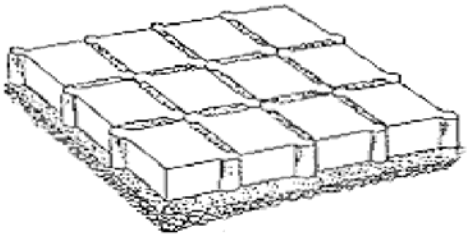

Modular Unit

Figure ST-03-5
Examples of Porous Pavement

ACTIVITY: Constructed Wetlands	ST – 04

Targeted Constituents				
● Significant Benefit		◗ Partial Benefit	○ Low or Unknown Benefit	
◗ Sediment	◗ Heavy Metals	◗ Floatable Materials	◗ Oxygen Demanding Substances	
◗ Nutrients	◗ Toxic Materials	◗ Oil & Grease	◗ Bacteria & Viruses	○ Construction Wastes

Description

Constructed wetlands may be used as a method of storm water treatment if designed and applied correctly, and are highly desirable as wildlife habitats. Wetlands can be very efficient in removing pollutants under some conditions; however, they should be used in conjunction with another BMP until firmly established and pollutant efficiency is verified. This practice is likely to provide significant reductions in most targeted constituents, but may not be as reliable as other types of storm water treatment.

Suitable Applications

- Small outfalls for which adequate water and soil conditions will allow the establishment and permanent growth of wetland vegetation.
- Large industrial and commercial project sites with ample space, for which adequate water and soil conditions will allow the establishment and permanent growth of wetland vegetation.
- Near greenways, parks, landscaping, recreational areas, or other aesthetic locations.

Approach

The regulatory definition of a wetland is an area that is inundated or saturated by surface water or groundwater at a frequency and duration sufficient to support a prevalence of vegetation typically adapted for life in saturated soil conditions, such as a swamp, marsh, bog, or vernal spring.

Natural wetlands are protected and permitted by the Tennessee Department of Conservation (TDEC) in conjunction with the U.S. Army Corps of Engineers. Wetlands can be identified through the presence of certain plants, soil types, insects, etc., in addition to the presence of water or poor drainage. Wetlands may be seasonal, so that it can be very difficult to recognize a wetland during the summer months. Do not disturb natural wetlands without express written permission from TDEC and the U.S. Army Corps of Engineers. Visit the TDEC Web site for more details on how to obtain an Aquatic Resource Alteration Permit:
http://www.state.tn.us/environment/permits/

In contrast, constructed wetlands are built specifically for treating storm water runoff, and are not created as mitigation for the loss of natural wetlands. Consequently, constructed wetlands do not necessarily have to meet the stricter standards necessary to replace natural wetlands. Constructed wetlands use larger areas than other types of storm water treatment BMPs. For small sites with advantageous water and soil conditions, concrete retaining walls can be used for one or more sides to save space.

The term "constructed wetland" may also refer to a method of treating small amounts of wastewater and sanitary sewage, typically from a single residence or a small group of residences. Within the context of the BMP Manual, the term "constructed wetland" refers to the treatment of storm water runoff only. Collection and treatment of wastewater and sanitary sewage is provided by the City of Memphis.

Constructed wetlands remove dissolved phosphorous, nitrogen, and other nutrients both directly (for aquatic plants) and through the soil (for rooted plants). In addition, wetland vegetation will uptake heavy metals, toxic materials, and other pollutants. Over long periods of time, bioaccumulation of metals such as lead or zinc have been observed in both fish and wildlife in some instances. Sediments should be removed regularly from the wetland forebay, and the presence of heavy metals should be monitored. It is conjectured that the wetland soils may need to be replaced every five to 10 years in order to improve uptake of heavy metals and phosphorous. Cleaning the forebay and replacing bottom soils is probably adequate for collecting and removing heavy metals.

A constructed wetland with additional capacity for extended detention is very similar to a wet detention basin, except that constructed wetlands have different types of vegetation. Guidelines in this BMP apply to the portion of constructed wetlands below the normal pool elevation. See ST-02, Wet Detention Basin, for typical berms, outlet structures, and grading details which are generally applicable to constructed wetlands also. An advantage of a constructed wetland, in addition to aesthetics and wildlife, is that a wetland has smaller required treatment volumes (which may be negotiable) than does a wet detention basin.

Basic Design Guidelines

The detailed design of a constructed wetland should generally be accomplished by a team that includes a hydrologist or engineer for hydrologic/hydraulic/water balance analyses and a wetland ecology specialist for selecting vegetation and habitat parameters. However, the following basic guidelines will assist in making preliminary plans and layouts for a constructed wetland.

Size

The overall goal for constructed wetlands is to capture over 90% of the annual storm water runoff volume for urban areas, using a design storm of 1.0 inch rainfall. For storms that are smaller than 1.0 inch of rainfall, the normal pool

elevation will not be completely replaced by newer storm water during the storm event. This means that in most instances, the average water residence time within the wetland is longer than the average time between storm events, greatly enhancing pollutant removal efficiency of the constructed wetland. The recommended treatment volume and the recommended surface area to be used for the normal pool elevation is:

V_T = C (1.0 / 12) (43,560) (A_D)
A_S = 0.02 A_D
V_T = Treatment volume (cubic feet)
C = Rational runoff coefficient (dimensionless)
A_D = Contributing drainage area (acres)
A_S = Surface area of constructed wetland (acres)

Using recommended values for V_T and A_S above, the average depth of wetland (D) expressed in feet is:

$$D = 5.21\sqrt{C}$$

Table ST-04-1
Size Criteria for Storm Water Wetlands

Surface area = percentage of area at normal water pool Elevation (without storm water surge)

Depth range = depth from normal water pool elevation

Volume = percentage of total volume below normal water pool elevation

** The surface area of high marsh should be maximized whenever possible (depending upon the types of vegetation or fish that are selected).

A. Shallow Marsh	**Surface Area**	**Depth Range**	**Approx. Volumes**
Forebay	5 %	18″ to 72″	10 %
High marsh	** 45 %	0″ to 6″	25 %
Low marsh	40 %	6″ to 18″	45 %
Deep water	5 %	12″ to 48″	10 %
Micropool	5 %	18″ to 72″	10 %

B. Deep Marsh	**Surface Area**	**Depth Range**	**Approx. Volumes**
Forebay	5 %	18″ to 72″	5 %
High marsh	** 25 %	0″ to 6″	10 %
Low marsh	25 %	6″ to 18″	15 %
Deep water	40 %	12″ to 48″	60 %
Micropool	5 %	18″ to 72″	10 %

Layout

Table ST-04-1 shows a basic allocation of different zones within a constructed wetland. The five zones are also shown in Figure ST-04-1. Zone percentages

for two basic types of wetland (designated as Shallow Marsh and Deep Marsh) can be adjusted to match the target volumes and to support various types of desired vegetation. The zone designated as high marsh (0″ to 6″ deep) is highly desirable; it generally contains thicker vegetation than low marsh zones. Ecological complexity is promoted by varying water depth through the vegetated area rather than keeping the depth uniform.

The length-to-width ratio of the constructed wetland should generally be at least 2:1, although a 1:1 ratio is usually acceptable with baffles, islands, internal berms, or other flow barriers. Dry-weather flow paths should meander back and forth throughout the wetland, as shown in Figures ST-04-1 and ST-04-2, to maximize contact time with soils and vegetation. Distribute flows equally throughout the wetland and avoid dead spaces. Prevent flow shortcuts by anticipating possible locations; erosion control matting and other geotextile applications may be useful to "armor" shortcut locations.

Islands reduce the total treatment volume (below the normal pool elevation) by a small, usually negligible, amount. Overgrowth of vegetation may actually cause a more significant reduction in storage volume and can be a factor in whether to harvest vegetation within a constructed wetland. It is important to provide plenty of shade to the wetland during the summer months, since shallow depths will generally allow the water to get warm and thus degrade the downstream environment for many cold-water fish and other organisms.

It is beneficial to incorporate cascades into the wetland layout, possibly by having more than one water surface elevation. Or a cascade can be placed on one fork of a flow path and not on another. A cascade provides aeration and increases oxygen levels in the water. Oxygen is needed for the digestion of organic nutrients and particles in the water. Cascades are aesthetically pleasing and can be fashioned in many ways.

Other layout considerations include maximum side slopes of 4:1 (H:V) and preferably side slopes that are 10:1 (H:V) or flatter. On very small facilities, retaining walls may be used to conserve space. There must be provisions for vehicle access to the forebay (which requires periodic cleaning) and to the micropool (which may require maintenance and water level adjustments). Provide adequate freeboard (typically 1 foot) to prevent ponding storm water or flood damage on adjacent properties.

The forebay may be partially replaced by a baffle box, storm water quality inlets (media filtration or oil-water separators) or other means to remove floatable debris and coarse sediments. If a detention basin is constructed upstream from the wetland, then the forebay may be eliminated altogether.

Water Balance

The water balance for the constructed wetland must be examined using typical values (maximum, average, minimum) for rainfall, temperature,

humidity, water table, evaporation rate, and infiltration rate. The 30-year averages, published by the National Oceanic and Atmospheric Administration, are broken down for each month of the year and represent a good starting point for water balance calculations. Evaporation rates may depend on the amount of sunlight or shade, prevailing wind directions, types of windbreaks (fences can be very beneficial), and other factors. Infiltration rates can be reduced or eliminated by using a geosynthetic liner, clay, or concrete. Infiltration rates can be significant in karst areas, sinkholes, fractured bedrock, sands, or gravels.

In particular, the water balance must be computed for dry-weather scenarios such as late summer and early fall. A groundwater baseflow or stream baseflow is very favorable but may not be present during extended periods of dry weather. Drinking water or treated process water can be added during dry weather, provided that water is dechlorinated prior to use within the wetland.

Soils

The soil must be suitable for wetland vegetation. Hydric soils (soils that are normally saturated) are preferable and can be identified by wetland experts using color and texture. If necessary, organic soils must be imported to the site and placed in areas up to 24 inches deep. The soil must have an affinity for phosphorus, for which minerals containing aluminum and iron ions are typically desirable. Do not use soils that contain large concentrations of phosphorus or heavy metals, as these soils may cause concentrations of contaminants to increase in the overlying water.

Minimize water loss by preventing infiltration through the wetland bottom. Depending on the type of soil, this can be accomplished by compaction, incorporating clay into the soil, or an artificial geosynthetic liner (at least 30 mil thickness, ultraviolet resistant, durable throughout extreme temperatures). Using gravel as the substrate may be a suitable approach in small facilities. Because gravel is lacking in nutrients, emergent species will have to take nutrients directly from the water (references 85 and 117). However, harvesting may be more practical if plants can be easily removed from gravel.

Vegetation

The overall design of vegetation for a constructed wetland should be performed by a qualified wetland ecologist with adequate experience and training. The wetland ecologist should also be involved during construction and installation in order to achieve best results. Basic types of wetland vegetation (also called hydrophytic vegetation or hydrophytes) can be classified as floating, emergent, and submergent. Wetland vegetation species should be selected based upon stress tolerance and hardiness to seasonal variations in water availability. During periods of dry weather, there must be sufficient water to avoid complete desiccation of plant roots.

Placing rooted wetland species from nursery stock throughout the wetland can be expensive when compared to a wet detention basin. However, relying on native volunteer plants to establish themselves would delay complete coverage for several years. Delayed coverage may allow the invasion of undesirable species or dominance by one or two species (such as cattails) which tend to flourish in disturbed conditions. Vegetation can also be established by taking donor soils from existing wetlands, but the soils must be transported and handled carefully. The best times to establish vegetation are typically spring and fall.

Common wetland plants include: arrowhead, bulrush, canarygrass, cattails, duckweed, ferns, marshgrass, pond lilies, pondweed, rushes, sedges, skunk cabbage, and woolgrass. Common wetland trees include: alder, ash, cottonwood, dogwood, and some maples. Trees should not have acidic leaves (such as oak trees) or undesirable fruit or nuts. Decaying leaves and stems provide food for many types of insects and other invertebrates, which in turn become food for fish, reptiles, amphibians, and mammals. Trees provide habitats for many birds and animals. Trees also tend to discourage migrating birds (geese and ducks), which severely degrade water quality.

It can be expected that soil adsorption will continue at a slower pace during the winter. For instance, the minimum temperature for cattails, sedges, and bulrushes to function effectively is 50°, 57°, and 60° Fahrenheit, respectively. It has been observed during fall and winter months that pollutants may actually be released at a greater rate than being absorbed. The net effect over a 12-month period may be that a constructed wetland is no more effective than a wet pond, particularly with regard to the removal of dissolved phosphorus and metals.

Phosphorous removal has been observed for wastewater applications (rather than storm water treatment) to occur during the first two or three years, but then declines thereafter and may actually become negative. This effect is thought to be the result of plants reaching maximum density, for which some researchers recommend that mature plant material should be harvested and removed from the wetlands. The uptake of heavy metals is not affected by plant density and maturity, and nitrogen removal does not degrade over time either, because it is a bacteriological process. The nitrogen removal process is very temperature dependent and, therefore, much slower in winter.

Annual harvesting of rooted vegetation may or may not be practical or effective at reducing seasonal losses of nutrients and prolonging the life of the constructed wetland facility (reference 128). The benefits of harvesting may depend upon the wetland species (reference 112). Placing rooted vegetation in gravel beds rather than soil may make harvesting practical. If harvesting is to be done, it should occur twice per season: 1) in the early summer when nutrient content in the plant material is at its peak, and 2) in the early fall as the growing season comes to a close.

Vegetation is planted only after the constructed wetland has been completely created, and then carefully surveyed and regraded. Flood for at least two weeks to ensure wet soils. Drain water from the constructed wetland 2 to 3 days prior to planting. Plant vegetation at staked locations that correspond to the proper normal pool depths. Allow water to reflood the wetland within 24 hours after planting.

Wildlife

It is beneficial to provide wildlife habitats within and around a constructed wetland. Fences can protect a wetland from human impacts, prevent access by domestic animals such as dogs and cats, and protect children. A particular concern about constructed wetlands is that mosquitoes will breed and thrive. Many types of birds and bats are very useful in reducing mosquitoes. Fish can help to control mosquitoes if a deep pool area is included for fish to reside during dry weather. Typical measures include:

- Mix of deciduous/evergreen trees
- Exposed trunks, snags, or logs
- Islands within constructed wetland
- Shrubs, vines, and hedges
- Brush piles
- Birdhouses, bathhouses, birdfeeders

Maintenance

- Inspect wetlands at least twice a year and after each extreme storm event. Remove trash and foreign debris. Remove nuisance vegetation and animals if present. Repair or replace areas of erosion or damage. Check sediment deposits and remove, if necessary. Clean deposits from the forebay when a loss of capacity is significant, probably every 3 to 5 years depending on the land use, or if concentrations of heavy metals or other pollutants in sediments are reaching a level of concern, typically every five to 10 years.

- In general, a constructed wetland should be preceded by other types of storm water treatment BMPs to remove oil, grease, toxic sediments, heavy metals, and coarse sediment. Inspect upstream controls at least twice a year and after each extreme storm event. Perform required maintenance and repairs, particularly for oil-water separators and for media filtration inlets.

- Removal of sediment depends on the accumulation rate and available storage, in addition to other factors such as watershed size, facility sizing, construction upstream, industrial or commercial activities upstream, etc. The types of sediment should be identified before removal and disposal. Special attention or sampling should be given to sediments accumulated from industrial, manufacturing or heavy commercial sites, fueling centers or automotive maintenance areas, parking areas, or other areas where pollutants are suspected. Treat sediment as potentially hazardous soil until proven otherwise.

Limitations

There are many limitations to the task of establishing a self-functioning ecological system such as a constructed wetland. A few limitations are listed here:

— Must have the correct soil types and the appropriate vegetation.

- Requires adequate surface area and volumes to function effectively.
- Difficult to construct and requires careful attention to detail.
- Must have adequate flow to maintain water level.
- Requires constant monitoring to remove nuisance vegetation and animals.
- Burrowing animals can damage geosynthetic liners and increase infiltration.
- Concern for mosquitoes, snakes, spiders, and other undesirable wildlife.

References **1, 28, 31, 39, 45, 55, 61, 65, 70, 75, 77, 85, 87, 88, 107, 111, 112, 117, 128, 144, 166, 185** (see BMP Manual Chapter 10 for list)

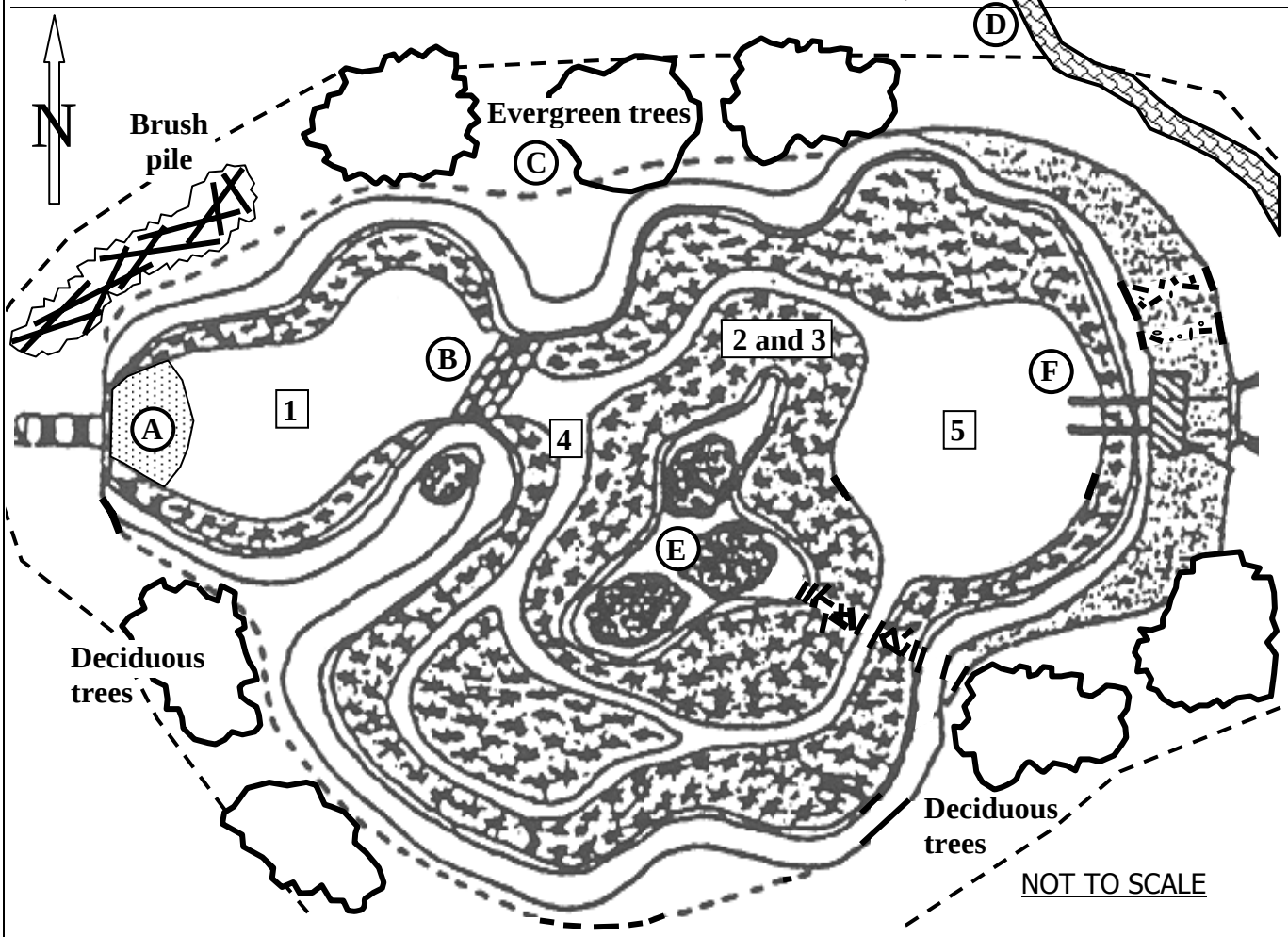

Notes:

A. Culvert outlet velocity should be minimized using efficient design or some type of outlet protection (ES-25).

B. A gabion wall or riprap berm will provide some filtering capability for removing trash, floating debris, and coarse sediment. This will reduce maintenance upon vegetated portions of wetland.

C. Provide a buffer zone (typically 20' to 25') around the wetland using native trees, shrubs, and grasses. Evergreen trees (also brush piles or fences) on north side will protect against winter weather. Deciduous trees on south side will provide shade in summer and sunlight in winter.

D. Post signs and place garbage cans as needed along nearby trails, sidewalks, or greenways.

E. An island in the center of the wetland can provide a safe haven for wildlife or birds. The island will also prevent shortcutting of flows.

F. Provide adjustable weirs, gate valves, or other means of controlling water surface elevation for long-term operations and maintenance.

Principal zones of a wetland:

1. Forebay
2. High marsh
3. Low marsh
4. Deep water
5. Micropool

Figure ST-04-1
Typical Wetlands Layout

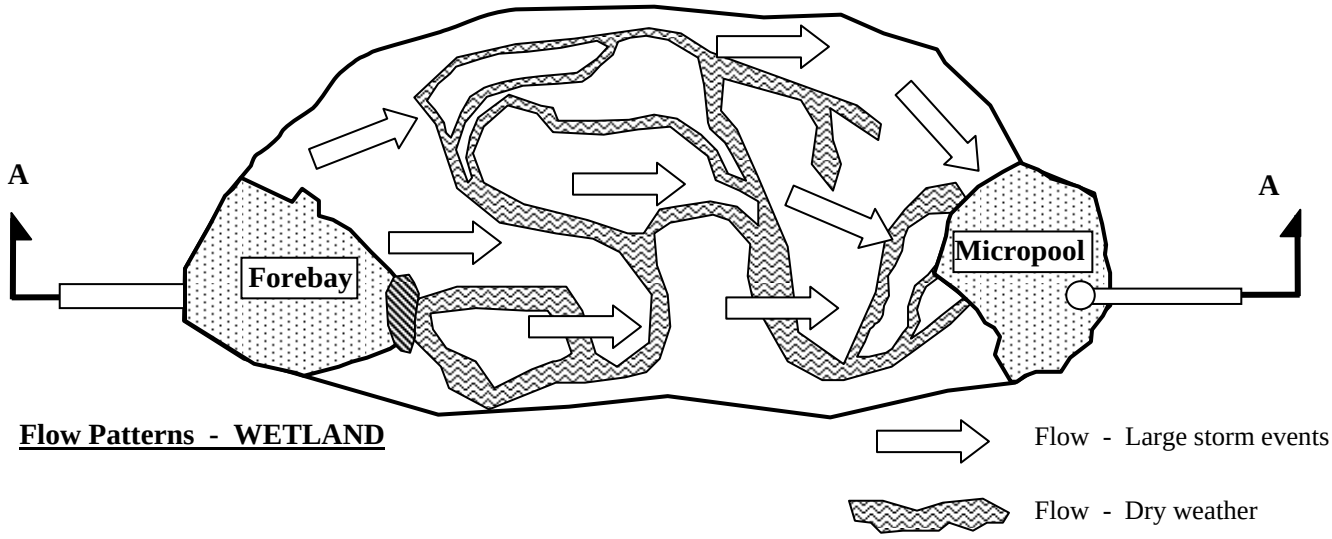

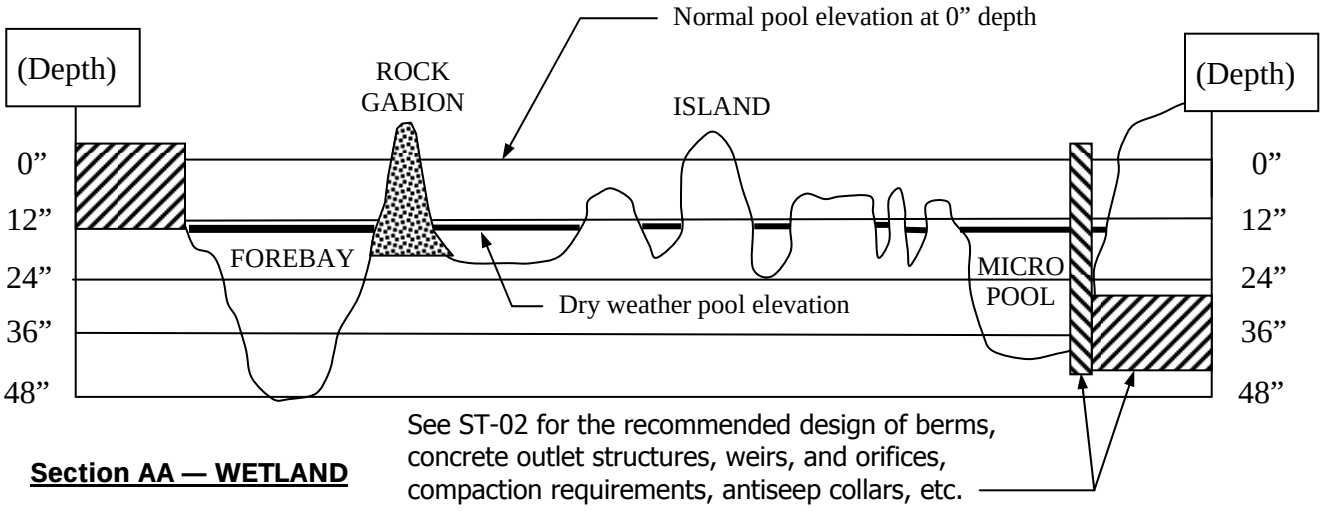

Figure ST-04-2
Typical Flow Patterns

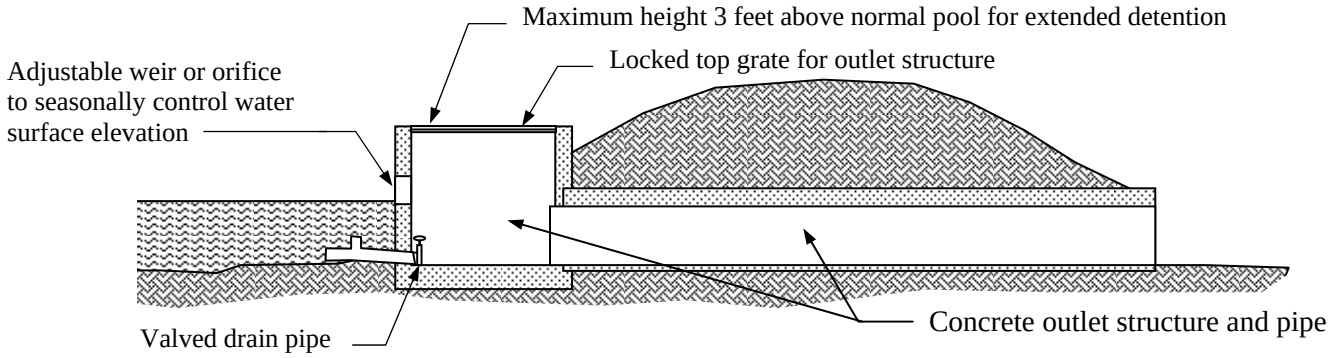

Figure ST-04-3
Typical Outlet Structure

NOT TO SCALE

ACTIVITY: Filter Strips and Swales	ST – 05

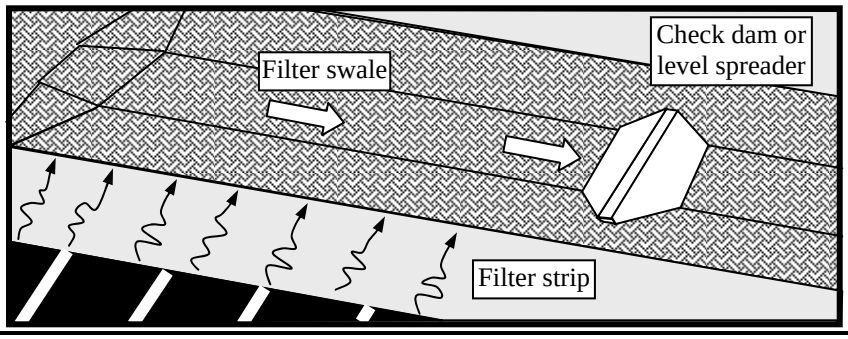

Targeted Constituents

● Significant Benefit ◗ Partial Benefit ○ Low or Unknown Benefit

◗ Sediment	◗ Heavy Metals	○ Floatable Materials	◗ Oxygen Demanding Substances	
◗ Nutrients	◗ Toxic Materials	◗ Oil & Grease	○ Bacteria & Viruses	○ Construction Wastes

Description

Filter strips and swales are capable of removing some sediments and pollutants from storm water runoff if correctly designed and constructed. Low velocities, combined with healthy stands of grass vegetation, allow particles to settle out from storm water runoff. Filter strips can be composed of grass or forest buffer zones, provided that efforts are made to ensure sheet flow to the buffer zone. Generally, a maintained grass filter strip is used to treat sheet flow, and a maintained grass filter swale is used to treat channel flow. This practice will provide a partial reduction in most types of pollutants.

Suitable Applications

- Filter strips and swales are often used in conjunction with other storm water management practices to treat runoff from paved streets and parking lots.
- Filter strips and swales can also be used to reduce the amount of directly connected impervious area (DCIA) that drains into the storm drainage system, thus reducing peak flows. In addition to pavement areas, this typically can be used for rooftops.

Approach

A filter strip is a relatively flat area of healthy grass vegetation adjacent to or downstream from an impervious surface that may contain pollutants. Alternatively, a wildgrass or forest buffer zone may function as a filter strip. A filter strip is usually intended for sheet flow from parking lots or streets, unless a level spreader (see ES-26) is used to convert concentrated channel flow into sheet flow. A filter swale is a vegetated channel that is wide and flat, used to slow runoff velocities from impervious surfaces that may contain pollutants. A filter swale is wider than necessary to convey the design storm; it is designed to have much lower velocities than a normal channel or ditch but still drain adequately.

Filter strips and swales perform well for small light-intensity rainfalls, but typically have no effect on the large design rainfalls used for storm water detention. Since most precipitation occurs during light-intensity rainfalls, filter strips and swales are a major component in improving water quality. Detention basins and constructed wetlands provide water quality treatment both during and between storms for the large design rainfalls. Filter strips and

swales should generally be used in combination with other storm water treatment BMPs whenever possible.

See Figure ST-05-2 for examples of how filter strips and swales can be used in parking lots and residential properties. Since thick and healthy grass vegetation is a part of every landscaped property, filter strips and swales are easy to incorporate into most BMP strategies. Filter strips and swales have removed as much as 80% of total suspended sediments and 50% of soluble zinc in the metropolitan Washington, D.C., area where properly constructed, but have not shown any removal for dissolved phosphorous or copper (reference 77). Other studies have also shown little or no removal for heavy metals, and also generally poor performance due to incorrect construction. California guidelines include a typical size for filter strips equal to 1,000 square feet per impervious acre, with a minimum width of 10 feet (reference 32).

The upper layout (Figure 2A—parking lot) shows sheet flow entering a wide swale rather than a gutter or curb inlet. Design considerations include width of swale, the anticipated overhang of vehicles, whether to use wheel stops, and spacing of grate inlets. In general, the grate inlets should flow to a detention basin or other storm water treatment BMP prior to being discharged to a storm drainage system or natural stream.

The lower layout (Figure 2B—residential property) shows the impervious area from rooftops and driveways. Rooftop drainage typically reaches ground level via gutters and downspouts, and it is understood that this storm water should be conveyed at least 5 to 10 feet from the building to avoid wet basements or saturated foundations. However, downspouts should be turned into sheet flow through filter strips whenever possible.

Filter strips and swales may also be used as a temporary erosion control strategy, in conjunction with other erosion control measures. Filter strips and swales are used downstream from erosion control measures that remove most coarse sediment and silts from the storm water. Also, sod (if properly pegged and stabilized) may be used as part of temporary inlet protection in conjunction with silt fence or straw bale barriers.

Sod Placement

Sodded grass (see ES-09) is preferable to seeded grass vegetation (see ES-08), but either method may be used to establish grass filter strips and swales. Sod has the advantages of immediate erosion control and storm water treatment, healthier stands of vegetation, aesthetics, less maintenance and less inspection, and increased property values. Refer to Figure ST-05-3 for a relative comparison of various types of turfgrass; information is also available from the Shelby County Extension Service Web site and office at the Agricenter.

Sod guidelines are explained more fully in ES-09. Protect sod with tarps or other covers during delivery so that it does not dry out between harvesting and

placement. Prepare subgrade by removing all weeds and debris, then add fertilizer, lime, and water as needed. Place sod in staggered fashion so that there are no long seams. After placing sod, lightly roll to eliminate air pockets and ensure close contact with the soil. After rolling, the sodded areas should be watered so that the soil is moistened to a minimum depth of 4 inches. Sod should not be planted during very hot or wet weather. Do not place sod on slopes that are greater than 3:1 (H:V) if they are to be mowed.

Filter Strips

A minimum width of 10 feet is recommended for vegetated filter strips at a slope of 1%. Widths of 20 to 30 feet are highly recommended, particularly if the slope is more than 1%. The length of a filter strip is typically the entire length of the adjacent parking lot, street, or building. The use of sod is very beneficial in establishing a filter strip, particularly for small widths such as 10 feet. Limit the width of pavement that drains to a filter strip; typical values should be 50 to 100 feet whenever possible.

Curbs and curb cuts will concentrate flows, so that generally curbs and gutters are not desirable for paved areas with filter strips. Avoid concentrating storm water runoff on pavements by ensuring that the pavement slopes and vegetated surface slopes are level or change very gradually. In busy parking lots, even vehicle wheels or parking curb stops may channelize flow in some instances and can only be overcome by a level spreader. Channelization will reduce the effective treatment area of the filter strip and may erode grass because of excessive velocities. A level spreader, check dam, or energy dissipater may assist in returning channelized flow back into sheet flow, if designed and constructed properly.

Protect grass filter strips from vehicle traffic; this is typically done with wheel stops made of precast concrete, iron, or landscaping timbers. Even heavy foot traffic can compact the topsoil and trample the grass, affecting performance of a filter strip. Design and analyze probable areas of foot traffic, and provide paths and sidewalks that are compatible with the need for grass filter strips. If irregular or uneven areas appear while the vegetation is being established, repair and restore to a smooth and even appearance to prevent concentrating storm water sheet flows.

Filter Swales

Filter swales are generally grass-lined channels that are wider than necessary for conveyance. Other materials may be incorporated into grass-lined channels, such as a gabion wall along one side of the channel or a concrete swale crossing, provided that overall flow velocities are below 1 foot per second. Typical slopes are generally 1 percent to ensure positive drainage. The average flow depth should not be more than 1 inch, and the maximum flow depth at any point should not be more than 3 inches.

Filter swales are often constructed around parking lots and commercial centers as recessed planters for landscaping. Filter swales in these areas may also incorporate inlets raised 4 to 6 inches above the swale, which may function as first-flush retention volume for pretreatment if infiltration rates are sufficient (typically 0.2 inches per hour observed field rate). Raised inlets should be constructed in a way that appears different and purposeful, so that the flooded median will not appear to be a case of bad drainage design. For instance, the inlets in Figure ST-05-2 may be raised if there is sufficient storage in the median areas to prevent flooding the parking lot. A raised inlet may also be indicated by wetland-type vegetation such as bulrushes, cattails, or sedges.

Filter swales may have level spreaders at the beginning of the swale (see ES-26) or landscape timbers spaced at regular intervals throughout the swale. Landscape timbers can be used to reduce the channel slope and increase residence time within the filter swale. Landscape timbers can also be used as bookends to enclose a "gravel filter," typically 5 to 10 feet long, in the end reach of a swale to trap sediment and pollutants.

The typical channel shape for a filter swale is trapezoidal or parabolic, with side slopes as flat as possible. The swale velocity and flow depth should be determined using Manning's equation and the design parameters included in ES-22, Channel Linings. Typically the velocity is checked for the mowed condition, while the flow depth and capacity are checked for the unmowed condition. Manning's roughness coefficient n depends heavily on the height of grass, so that the mowed and unmowed conditions will yield significantly different velocities and flow depths.

Pollutant Removal Efficiency

Grass swales and ditches should generally be designed for a minimum 10-year storm in order to verify adequate capacity. However, the average mean rainfall is generally used to analyze the total suspended sediment (TSS) removal efficiency, which is shown in Figure ST-05-1 and comes from reference 40. Compute the average flow depth: divide the cross-sectional flow area by the top width of the water surface. The following three heavy metals can also be estimated based upon the TSS removal efficiency:

Copper (Cu)	—	60 percent of TSS removal efficiency
Lead (Pb)	—	90 percent of TSS removal efficiency
Zinc (Zn)	—	50 percent of TSS removal efficiency

In addition, removal efficiencies for grass filter strips and grass buffers can be estimated using Figure ST-05-1. Compute travel time using typical National Resources Conservation Service methods such as the kinematic equation for time of concentration. Then enter the graph with an assumed depth of 0.02 feet (or about 0.25 inches). The effectiveness of a grass filter strip depends heavily upon sheet flow being maintained across the grass surface. This is accomplished by level spreaders and by careful maintenance of the grass surface.

Check dams generally increase the travel time within a swale and remove trash/debris.

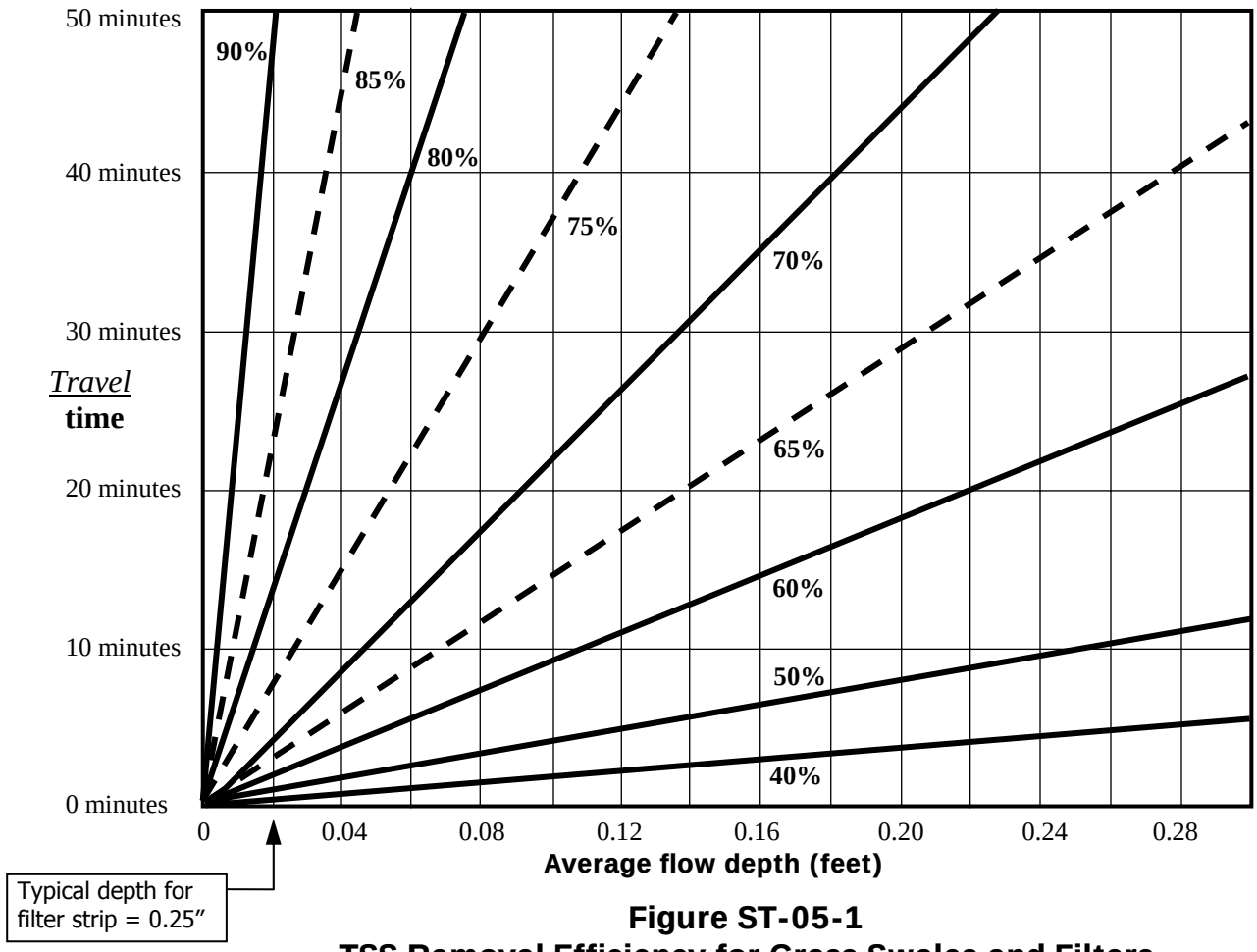

Figure ST-05-1
TSS Removal Efficiency for Grass Swales and Filters

Maintenance

- Filter strips and swales should be inspected regularly during the establishment of vegetation. Repair or replace any damage to the sod, vegetation, or evenness of grade as needed. Look for signs of erosion, distressed vegetation, or channelization of sheet flow.

- In general, grass vegetation should not be mowed shorter than 3 inches. Maximum recommended length of grass is 6 to 8 inches. Allowing the grass to grow taller may cause it to thin and become less effective. The clippings should be bagged and removed. Mowing grass regularly promotes growth and pollutant uptake.

- Keep all level spreaders or check dams even and free of debris. Remove sediment by hand with a flat-bottomed shovel during dry periods, leaving as much of the vegetation in place as possible. Reseed or plug any damaged turf or vegetation.

Sediment Removal

- The sediment accumulation rate is dependent upon a number of factors such as land use, watershed size, types of industry, nearby construction, etc. The sediment composition should be identified before being removed and disposed.

- Some sediment may contain contaminants for which the Tennessee Department of Environment and Conservation (TDEC) requires special disposal procedures. Consult TDEC—Division of Water Pollution Control (368-7939) if there is any uncertainty about what the sediment contains or if it is known to contain contaminants. Generally, special attention or sampling should be given to sediments accumulated in facilities serving industrial, manufacturing or heavy commercial sites, fueling centers or automotive maintenance areas, large parking areas, or other areas where pollutants are suspected to accumulate.

- Clean sediment can be used as fill material, hole filling, or land spreading. It is important that this material not be placed in a way that will promote or allow resuspension in storm runoff.

Limitations

- Grass filter strips can only treat sheet flow. Curb cuts have the effect of channelizing sheet flow and are not useful in establishing grass filter strips as a storm water treatment BMP.

- Grass filter strips and swales are effective only on gentle slopes, typically less than 1 or 2 percent. Steeper slopes generally will not receive credit as being a storm water treatment BMP. Site topography may not allow the use of grass filter strips or swales. Grass swales typically must be very long to accomplish storm water flow reduction and storm water quality equal to a detention basin.

- Grass filter strips and swales are useful primarily for small areas only, typically 1 acre or less. Larger project sites or properties can also make effective use of filter strips and swales for smaller sub-basins.

- Proper maintenance is required to maintain the health and density of grass vegetation, such as irrigation during summer droughts and adding small amounts of fertilizer or lime as needed.

References

15, 16, 17, 28, 31, 32, 33, 40, 59, 60, 66, 77, 88, 91, 102, 116, 118, 144, 146 (see BMP Manual Chapter 10 for list)

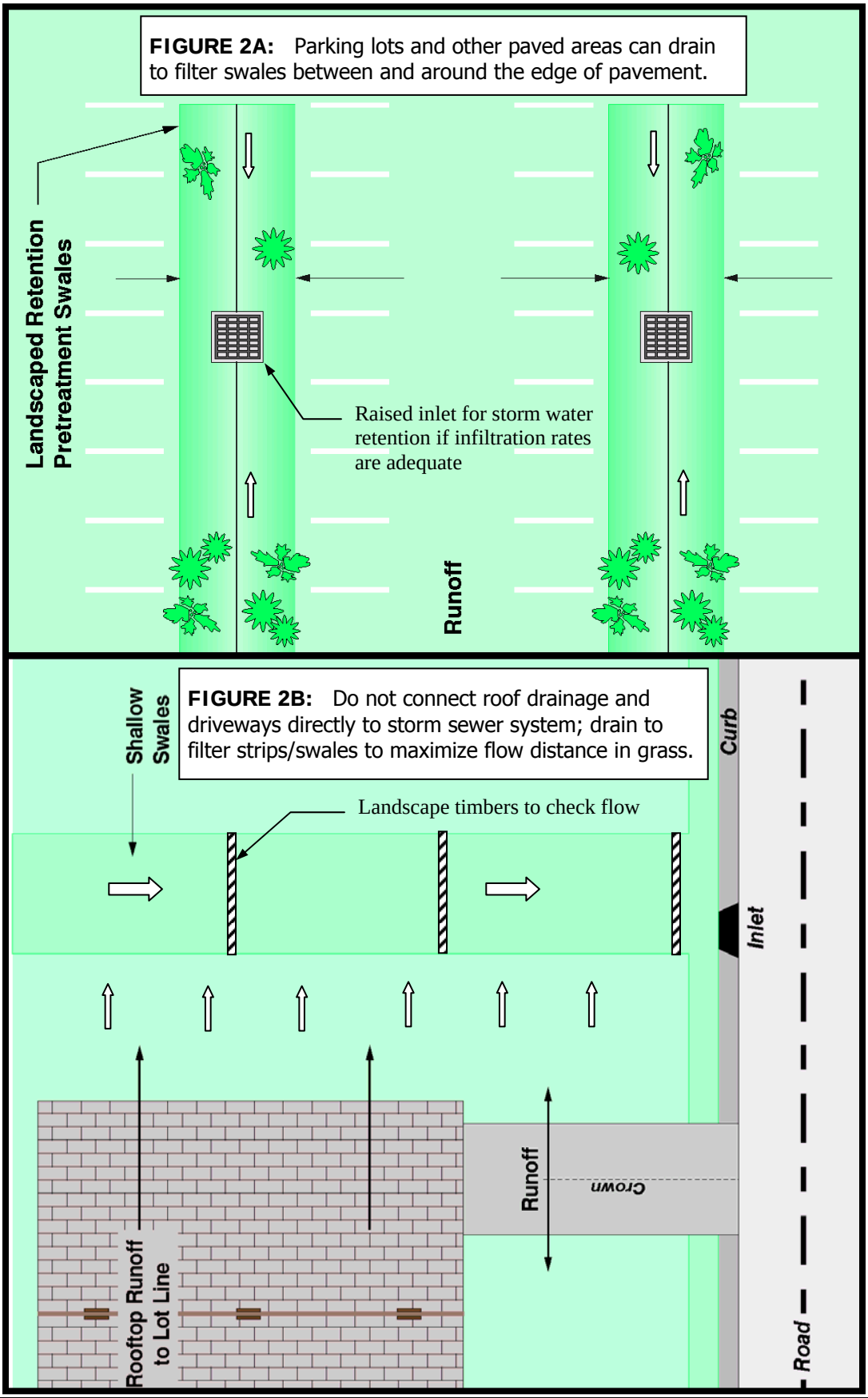

Figure ST-05-2
Examples of Filter Strips and Swales

COLD TOLERANCE (winter color persistance)

High
- Creeping bentgrass
- Kentucky bluegrass
- Red fescue *
- Colonial bentgrass
- Highland bentgrass
- Perennial ryegrass *
  - Tall fescue *
  - Weeping alkaligrass
    - Dichondra
    - Zoysiagrass *
    - Common bermudagrass *
    - Hybrid bermudagrass *
    - Kikuyugrass
    - Seashore paspalum
    - St. Augustinegrass

Low

HEAT TOLERANCE

High
- Zoysiagrass *
- Hybrid bermudagrass *
- Common bermudagrass *
- Seashore paspalum
- St. Augustinegrass
- Kikuyugrass
  - Tall fescue *
  - Dichondra
  - Creeping bentgrass
    - Kentucky bluegrass
      - Highland bentgrass
      - Perennial ryegrass
      - Colonial bentgrass
        - Weeping alkaligrass
        - Red fescue *

Low

MOWING HEIGHT ADAPTATION

High cut
- Tall fescue *
  - Red fescue *
  - Kentucky bluegrass
  - Perennial ryegrass *
  - Weeping alkaligrass
    - St. Augustinegrass
    - Common bermudagrass *
      - Dichondra
      - Kikuyugrass
      - Colonial bentgrass
      - Highland bentgrass
      - Zoysiagrass *
        - Seashore paspalum
        - Hybrid bermudagrass
          - Creeping bentgrass

Low Cut

DROUGHT TOLERANCE

High
- Hybrid bermudagrass *
- Zoysiagrass *
- Common bermudagrass *
- Seashore paspalum
  - St. Augustinegrass
  - Kikuyugrass
    - Tall fescue *
    - Red fescue *
      - Kentucky bluegrass
      - Perennial ryegrass *
      - Highland bentgrass
      - Creeping bentgrass
      - Colonial bentgrass
      - Weeping alkaligrass
      - Dichondra

Low

MAINTENANCE COST AND EFFORT

High
- Creeping bentgrass
- Dichondra
  - Hybrid bermudagrass *
    - Kentucky bluegrass
    - Colonial bentgrass
    - Seashore paspalum
    - Perennial ryegrass
      - St. Augustinegrass
      - Highland bentgrass
      - Zoysiagrass *
        - Tall fescue *
        - Common bermudagrass *
        - Kikuyugrass

Low

Taken from reference 16 (1984)

* Locally Applicable

Figure ST-05-3
Characteristics of Various Types of Grass

ACTIVITY: Water Quality Inlets and Media Filtration Inlets	ST – 06

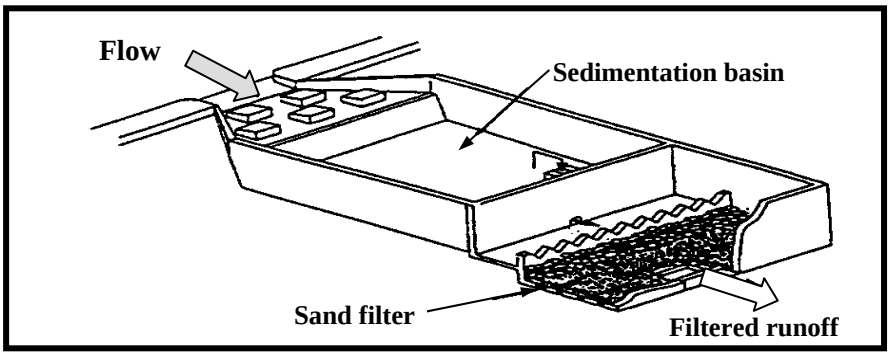

Targeted Constituents

● Significant Benefit ◗ Partial Benefit ○ Low or Unknown Benefit

● Sediment	◗ Heavy Metals	◗ Floatable Materials	◗ Oxygen Demanding Substances	
◗ Nutrients	◗ Toxic Materials	◗ Oil & Grease	◗ Bacteria & Viruses	○ Construction Wastes

Description

This storm water treatment BMP addresses a variety of water quality inlets, consisting of modified catch basins and media filtration inlets, with oil-water separators being specifically addressed in ST-07.

Modified catch basins contain an oversized sump and some type of inflow and outflow control to remove coarse sediments and floatable materials. Modified catch basins are effective as a pretreatment measure for other BMPs, but are not sufficient to provide storm water treatment as a stand-alone measure.

Media filtration inlets use materials such as sand, peat, screens, or cloth to filter storm water runoff. Sand filtration inlets can be constructed in a variety of layouts using precast vaults. Media filtration systems are available commercially with a wide range of materials and methods for easy installation and operation. Media filtration inlets will create a partial reduction in most pollutants if they are inspected, cleaned, and maintained on a regular basis. A layer of organic material (such as peat moss) or potentially some types of clay can increase the removal of metallic ions and organic pollutants from storm water runoff.

Suitable Applications

- Modified catch basins (with enhanced capability to capture coarse sediments and floating debris) and media filtration inlets may be used on commercial and industrial properties that have parking lots and vehicle traffic. This type of land use is likely to receive salts and sands for removing ice and snow, trash from vehicles, leaking oil and grease, and leaves and dirt from landscaping.
- Water quality inlets may be used for most impervious properties with parking lots and vehicles traffic. They are also highly recommended for commercial and industrial sites that generate fine particles, sediment, tailings, sawdust, or other pollutants for which a media filtration inlet would be effective.

Approach

The various types of water quality inlets should be selected according to targeted constituents, site area constraints, cost and frequency of maintenance, and inspection requirements. Media filtration inlets can essentially be designed

to filter any particle size and particle type imaginable at low to moderate flow rates. Many filtration systems are readily available from commercial vendors in a variety of sizes, layouts, and targeted pollutants. Water quality inlets can be designed for new property uses or can often be retrofitted onto existing storm water drainage systems. Water quality inlets must be constructed with watertight joints and seals to be effective.

A very important decision to be evaluated is the ability to bypass or convey large storm events that have the potential to damage the BMP system or resuspend collected pollutants. Figure ST-06-1 shows one method for allowing high-flow storm water to bypass the BMP system; there are many other types of flow-splitting structures that allow the BMP system to function "offline" rather than "online." It is recommended that water quality inlets and media filtration inlets should treat the 1-year design storm. Other storms that are mentioned in the vendor catalogs are also the 6-month design storm (80% of the 1-year storm) and the 3-month design storm (62% of the 1-year storm).

A very important consideration is the allocation of long-term resources for inspection, maintenance, and repair. Water quality inlets should only be constructed if: 1) there is a maintenance plan to regularly inspect and maintain inlets on a long-term basis, and 2) there is an agreement or fiscal guarantee that the required maintenance resources will be available throughout the operation life of the water quality inlets. Without regular inspection and maintenance, a water quality inlet will fail and generally create a worse pollution problem than having no inlet at all.

Some advantages of water quality inlets are:

- Do not require a supply of water (such as wet detention basins or wetlands).
- Can be placed underground as part of the storm drainage system.
- Suitable for smaller catchments including parking lots and roadways.
- Many types of filters are suitable for larger drainage areas up to 5 or 10 acres.
- Sand or cartridged media filters may be particularly suitable for industrial sites because they can be located underground and industrial facilities generally have the resources to routinely inspect and maintain the systems.

This BMP fact sheet discusses the general uses of modified catch basins and media filtration inlets. The practices presented in ST-07, Oil-Water Separator, should also be reviewed when oil and grease are likely to be present in storm water runoff.

A typical modified catch basin, as shown in Figure ST-06-2, will capture coarse sediments and floating debris. A modified catch basin could have many possible variations that will essentially perform the same function. The modified catch basin must have removable elements to allow inspection and cleaning of all pipes.

A sand filter is probably the most common type of media filtration system used.

Figure ST-06-3 shows a surface sand filter system, which is easier to inspect and usually less costly than an underground sand filter system. The detail shown can be sized to handle several acres. Filter cartridges or other media may also be acceptable alternatives to using sand if maintenance and operation considerations are addressed.

Figure ST-06-4 shows a manufactured BMP media filtration system called StormFilter, manufactured by Contech Stormwater Solutions. It is similar to the sand filter vault (shown in Figure ST-06-6), except that it uses media cartridges instead of sand. The internal valving, hardware, and cartridges are installed into a precast concrete vault. Media cartridges are especially useful for industrial sites where specific types of particles can be targeted. Media cartridges can be designed to target specific pollutants such as sediments, oil and grease, organics, heavy metals, and soluble nutrients. StormFilter requires 2.3 feet of head differential across the unit to work properly. Contech also makes a high-flow bypass system called StormGate. Contact the manufacturer for design and installation details and pricing at http://www.contechstormwater.com/

Two different types of underground sand filter layouts are also shown in the figures as details. Underground filtration systems are more difficult to inspect and maintain. On the other hand, underground filtration systems are protected from weather and other hazards, and they do not take up valuable real estate. Underground systems may exhibit odor problems during the summer because of a lack of bacterial degradation of accumulated organic matter and a lack of aeration within the wet pool.

The Delaware sand filter (Figure ST-06-5) is suitable for overland sheet flow from paved areas such as commercial properties or industrial sites. Originally designed by Earl Shaver for the state of Delaware, it has two parallel concrete trenches or vaults. The first concrete trench serves as a sedimentation basin and storage facility, to evenly distribute water across the sand filter in the second concrete trench. A clearwell is located at the end, with room for an overflow weir and underdrain system to outlet.

The underground sand filter (Figure ST-06-6) handles concentrated flow after it has already been collected within a storm drainage system. The front end of the system helps to trap sediment and floatable materials prior to entering the sand filter. The underground sand filter should contain an overflow bypass within the vault, or alternatively a flow-splitter prior to the system.

Figure ST-06-7 shows a grate inlet filter insert that uses trays to improve storm water quality. Figure ST-06-8 shows a grate inlet filter insert that uses sorbent material to capture oil and grease. Some special types of sorbent material are durable and strong enough to remain in a filter tray for months, with exceptional capacity for absorbing oils and grease. Figure ST-06-9 shows two types of catch basin modifications that will produce clog-resistant media filtration inlets. In general, catch basin filter inserts should only be used wherever maintenance staff is available to check the filters frequently and where local flooding will not occur if the filters should clog. Some companies manufacture the insert frame (stainless steel or fiberglass), which can generally be fabricated in any size to match an existing or proposed inlet. The filter medium typically consists of a blown polypropylene filter with a Dacron outer scrim, which is designed to handle oils, grease, polychlorinated biphenyls, and sediment. Contact manufacturers for design and installation details and pricing of grate inlet inserts at:

http://www.aquashieldinc.com
http://www.suntreetech.com
http://www.abtechindustries.com

Two media filtration inlet manufacturers are included in this BMP. Manufactured systems should be selected on the basis of good design, suitability for desired pollution control goals, durability of materials, ease of installation, and reliability. The products listed here are not intended as a specific endorsement or recommendation. It is incumbent upon the property owner and developer to carefully investigate the suitability and overall trustworthiness of each manufacturer and/or subcontractor.

Media filtration systems are most effective under smaller flow volumes such as the first flush volume (which is required to be treated according to the Memphis Storm Water and Street Ordinance). Media filtration systems are generally not effective under conditions of heavy rainfall or floods. Furthermore, some systems can be damaged or the pollutants could be resuspended if operating under high-flow or flooding conditions. To prevent overloading filtration systems, there should be a mechanism to bypass or divert large flows. Commercially available systems may have a high-flow bypass built into the equipment.

Design Variables

There are no design requirements for a modified catch basin, other than the minimum dimensions shown in Figure ST-06-2. Extra attention may be required for multiple inlet pipes or special flow conditions, possibly requiring a larger size for a catch basin.

When using commercial products such as water quality inlets (media filtration inlets or oil-water separators), the manufacturer's recommendations should be considered in the product sizing and applicability. Verify that adequate storm water treatment is provided and that high-flow bypass methods do not hinder the system from adequately treating the first flush volume. The

first flush volume is described in the Memphis Storm Water and Street Ordinance as 0.5" of storm water runoff times the contributing drainage area.

A major drawback for a media filtration inlet is the need for elevation differences in the storm drainage system. A media filtration typically needs at least 5 feet of head loss available across the system, in order to accommodate live pool storage and sand filter thickness. Water quality inlets and media filtration inlets must be constructed with watertight joints and seals to be effective.

Filtration Volume

The volume of the live pool for a sand filtration or other media filtration system shall usually be the first flush volume, which is intended to be slowly released through the filtration device after being treated. The live pool may include any storage capacity of incoming pipes and catch basins that is clearly not part of the dead pool volume. The dead pool volume is the portion of the filtration system that always has water (such as underground sand filters). Some examples of live pool volumes are shown in Figures ST-06-3, ST-06-5, and ST-06-6. Larger filtration volumes are typically much easier to accommodate within an open system such as the surface sand filter.

Filtration Surface Area

The following equation is commonly used (references 9 and 180) to determine the surface area of a sand filter:

$A_S = 3630\ A_D\ D_{FF}\ D_S\ /\ (\ K\ T_D\ (\ D_S + D_W\ )\ )$

A_S = surface area of sand filter (square feet)
3630 = conversion factor from acre-inches to cubic feet
A_D = area draining to facility (acres)
D_{FF} = first flush depth (inches) — 0.5" for the City of Memphis
D_S = depth of sand filter (feet) — 1.5' to 2.0' recommended sand depth
D_W = average water depth over sand filter (feet) — usually one-half the difference between top of sand and maximum water surface elevation
K = sand filter permeability (feet/hour) — recommended 2.0 feet/hour
T_D = drawdown time (hours) — 24 hours for the City of Memphis

This equation is appropriate for sand filters with typical gradation from 0.02 to 0.04 inches diameter. Sand meeting standards of clean concrete sand (American Society for Testing and Materials C 33) or fine aggregate for concrete (Tennessee Department of Transportation Section 903.01 in reference 172) will satisfy gradation requirements. The filter area must be increased if a smaller size sand is used. Alternatively, measured values of sand filter permeability may be used to compute surface area with an appropriate safety factor (2.0 to 3.0) for clogging and compaction.

Additional design criteria for the surface sand filter (Figure ST-06-3) include:

- Size the control orifice or perforated riser pipe to allow for a 24-hour drawdown time, in conjunction with allowable sand filtration loading rate.

- Provide an energy dissipater prior to the sedimentation basin to reduce turbulence. Consider using some type of flow-splitter immediately upstream of a surface sand filter.

- Typical length-to-width ratio of the sedimentation basin should be at least 3:1 (L:W) to prevent possible shortcutting. Allow for a minimum freeboard of 6". Provide easy vehicle access to basin for maintenance and cleaning.

Additional design criteria for the Delaware sand filter (Figure ST-06-5) and the underground sand filter (Figure ST-06-6) include:

- The live pool volume typically is the most stringent requirement to meet. An adjacent vault may be needed to provide additional live pool volume. Ensure that storm water runoff flow entering the sand filter is distributed evenly.

- Structural design should be performed by a professional engineer in areas where traffic loading is a concern. Otherwise, prevent vehicles from driving onto any type of underground structure while ensuring nearby access.

- Provide baffled walls to reduce entrance velocities. The front portion of the structure should contain a dead storage pool to retain floatable materials and sediment. For ease of inspection and maintenance, limit the depth of the dead pool volume to less than 4 feet.

- Provide adequate access for inspection, cleaning, and maintenance activities for each chamber. Removable access covers are recommended for chambers that do not have adequate standing room. Provide steps or rungs as needed.

- Use geotextile fabric on top of the sand layer to prevent displacement. Use geotextile fabric beneath the sand layer to prevent loss of material through the gravel underdrain layer. Typical underdrain pipe is 4" diameter schedule 40 polyvinyl chloride pipe, with 3/8" perforations around the pipe diameter at 6" spacing. Place underdrains at 5' lateral spacing with a 1% to 2% positive grade.

A pretreatment sedimentation basin is essential to avoid rapid clogging of the filter medium. Since peat seems to be very effective at removing dissolved contaminates such as heavy metals, there has been research into using peat/ sand mixtures (references 47 and 119) that are subject to clogging problems. Research has also indicated that compost made from leaves is very effective at

removing dissolved phosphorus and metals as well as oil and grease (reference 110). Field research at Austin, Texas, (reference 10) indicates that the surface sand filter has a removal efficiency of total suspended solids that is similar to wet and dry detention basins: about 70 to 90%. Removal rates for heavy metals, oil, and grease vary from 20% to 80%, depending on the application.

Consult references 10, 105, and 120 for additional design and maintenance criteria. Inspection and maintenance frequency will also greatly affect pollutant removal rates.

Catch Basin Inserts

Catch basin inserts are ideal for industrial sites as they fit into existing catch basins, and therefore may avoid the need for an "end-of-pipe" facility. Typical catch basin inserts are shown in Figures ST-06-7 and ST-06-8, consisting of a series of trays or sorbent roles/tubes. The top trays are designed to capture coarse sediments, and lower trays may capture finer sediments or specific pollutants. Inserts made from fiberglass insulation materials can achieve up to 90% removal for heavy metals, oils, and grease (reference 74). Since catch basin inserts require frequent inspection and maintenance, they should only be used where a full-time maintenance person is located on the site (typically at large commercial or industrial facilities). A typical insert design may have a high-flow bypass and should be hydraulically designed to allow storm water runoff into the drain system without danger of local flooding.

Maintenance

- Inspect modified catch basins and media filtration systems on a regular basis, typically every month and after heavy rainfalls. Record observations in an inspection log and take pictures as necessary to document conditions. Make immediate repairs as needed. Clean or replace filtration media as needed to prevent clogging.

- Perform cleanout on a regular basis using confined-space procedures and equipment as required by Occupational Health and Safety regulations, such as nonsparking electrical equipment, oxygen meter, flammable gas meter, etc. Remove trash, debris, sediments or clogged media as needed, and then dispose of them properly. Sediments or clogged media may contain heavy metals or other toxic substances and should be handled as hazardous waste. Removal of sediment or clogged media depends on the accumulation rate, available storage, watershed size, nearby construction, industrial or commercial activities upstream, etc. Sediment or clogged media should be tested for identification of pollutants prior to disposal.

- Some sediment may contain contaminants for which the Tennessee Department of Environment and Conservation (TDEC) requires special disposal procedures. Consult TDEC — Division of Water Pollution Control (368-7939) if uncertain about what the sediment contains or if it is known to contain contaminants. Generally, give special attention or sampling to sediment accumulated in industrial or manufacturing facilities,

fueling centers or automotive maintenance areas, large parking areas, or other areas where pollutants are suspected to accumulate.

- It is generally more cost efficient to clean the filtration media. For sand filters, cleaning or replacement of the top few inches may restore the permeability rate. Failure to clean the filter surface regularly may result in the need to replace the entire media because of penetration of fines into the filter.

Limitations

- Media filtration systems and modified catch basins will require more frequent inspection and maintenance than most other storm water treatment BMPs. Filtration media will need to be cleaned and/or replaced frequently. There is very high potential for severe clogging or reduced pollutant removal efficiency in filtration systems, particularly if there are unstabilized soil surfaces upstream. Do not operate filtration systems until upstream erosion areas are controlled.

- Media filtration systems cause a large head loss that may require special consideration in the hydraulic design of the overall storm water collection system. Systems may typically require vertical filtration through at least 18 inches of sand and 6 inches of underdrain material, for an absolute minimum head loss of 2.5 feet.

References

9, 10, 31, 33, 34, 35, 38, 47, 74, 77, 105, 110, 119, 120, 172, 180, vendor information (see BMP Manual Chapter 10 for list)

A high-flow bypass structure may also be constructed in a rectangular structure or an open channel using diversion weirs.

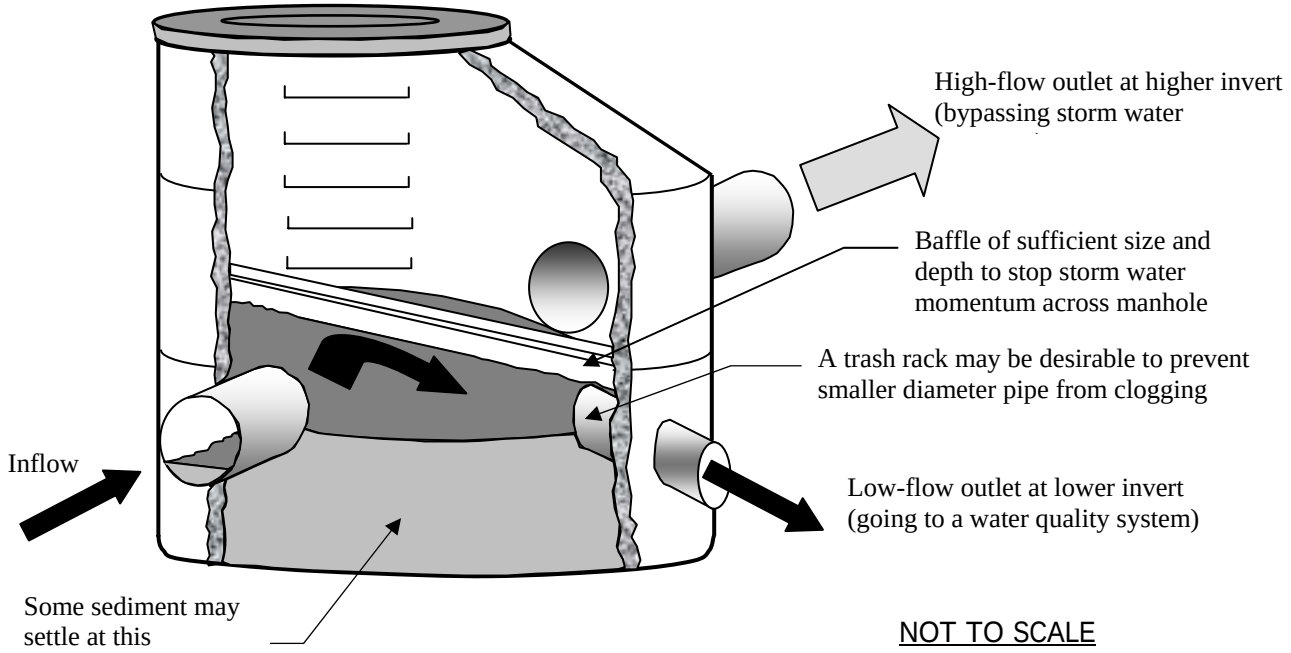

Figure ST-06-1
Typical Storm Water High-Flow Bypass Manhole

Notes:

1. Securely attach pipe elbow, tee, or cross to the manhole or structure to resist expected flow velocities and forces. Bolts or other removable fasteners should preferably be used. Cross braces or other supports may be necessary.
2. A modified catch basin is a good practice for areas with potential sediment loads, and as a pretreatment unit for most other storm water treatment BMPs.

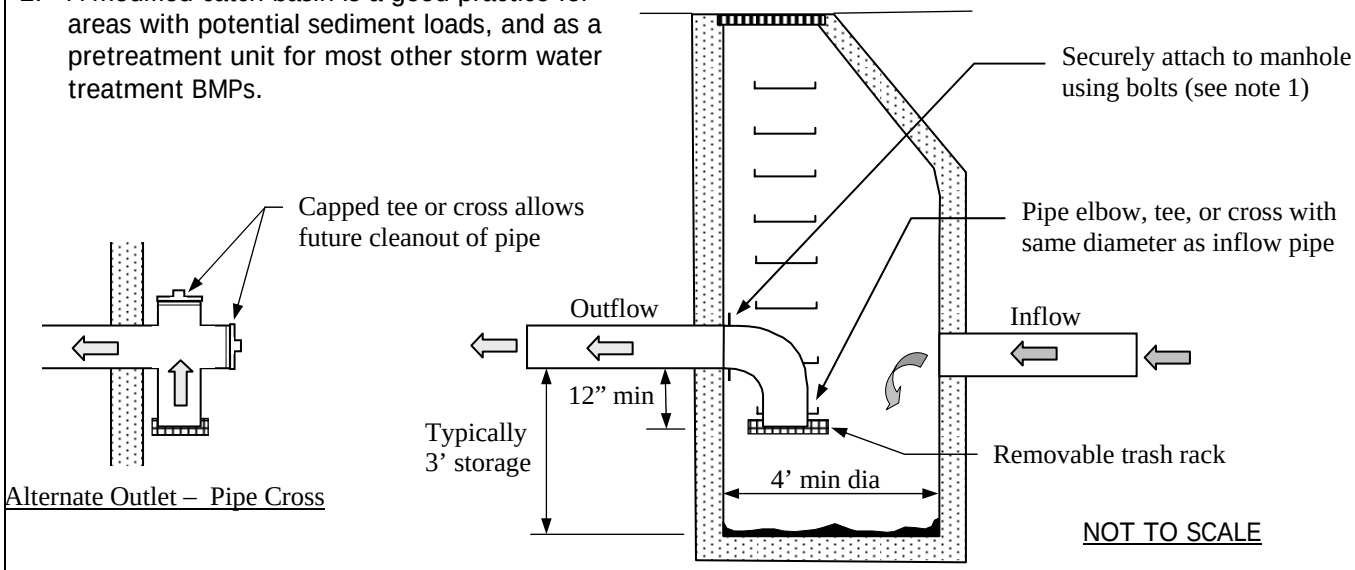

Figure ST-06-2
Modified Catch Basin

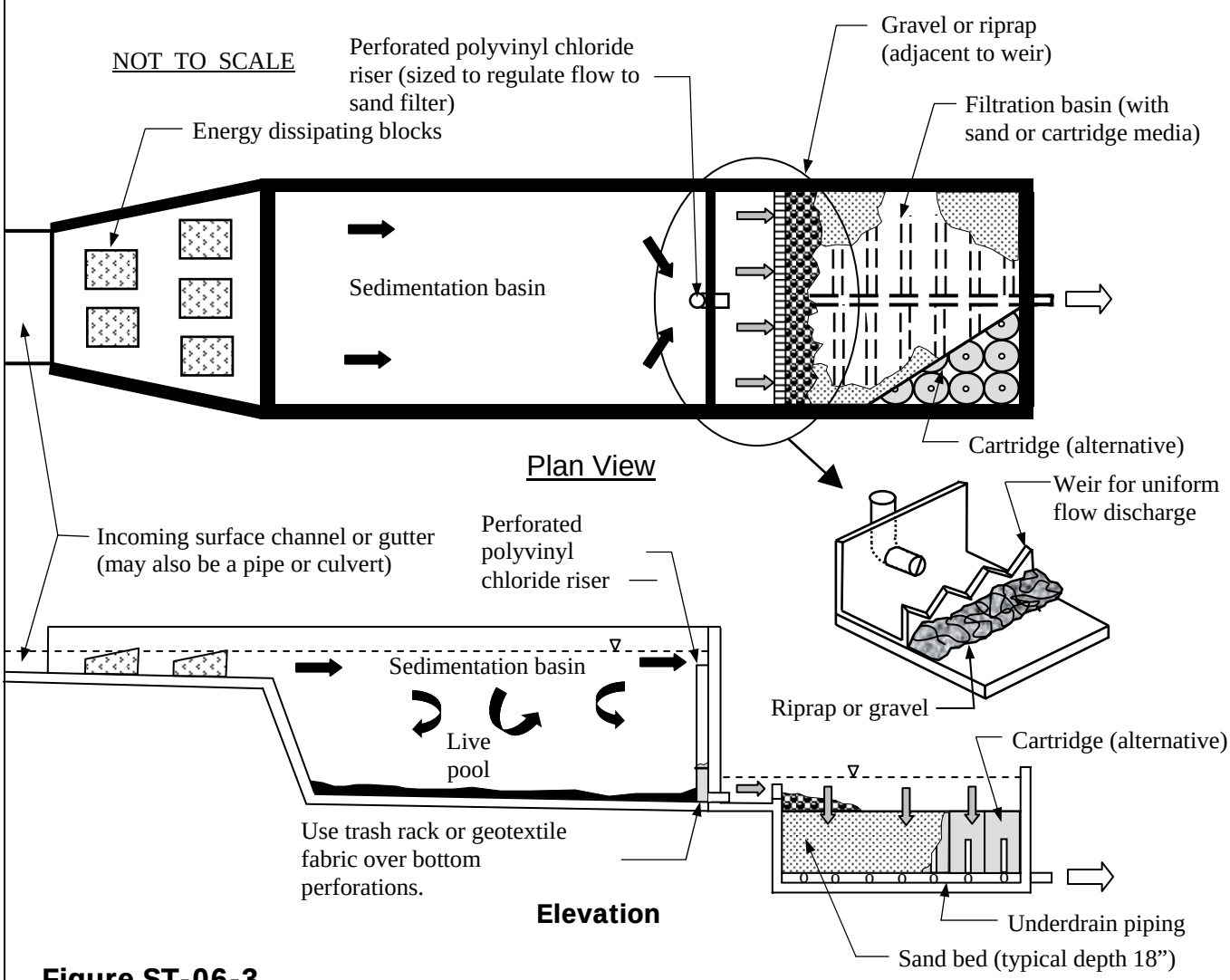

Figure ST-06-3
Surface Sand Filter

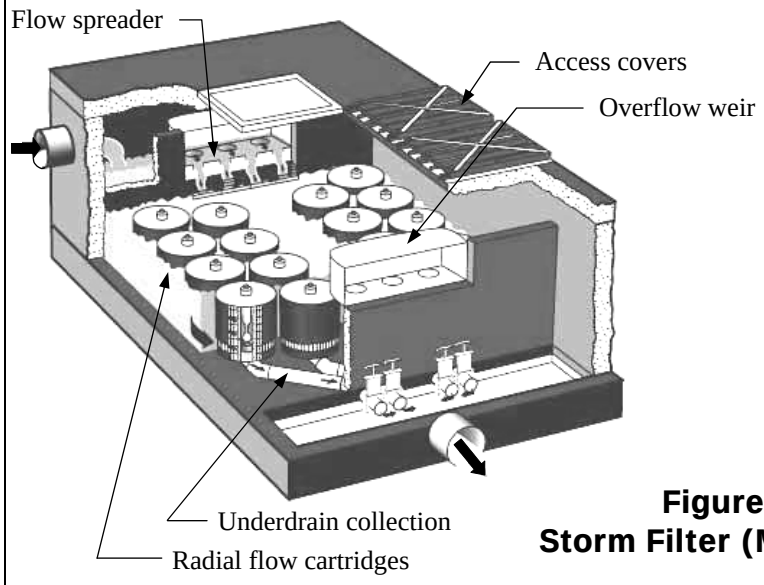

Notes:

1. Storm Filter is manufactured by Contech Storm Water Solutions. The end product consists of a precast vault (sized by Contech and produced by a precast vendor) and the necessary valving and hardware. Contech also makes a high-flow bypass system called Storm Gate. See http://www.contechstormwater.com/ for details.
2. Media cartridges can be designed to target specific pollutants such as sediments, oil and grease, organics, heavy metals, and soluble nutrients. The Storm Filter requires 2.3 feet of head differential across unit.

Figure ST-06-4
Storm Filter (Media Cartridge)

NOT TO SCALE

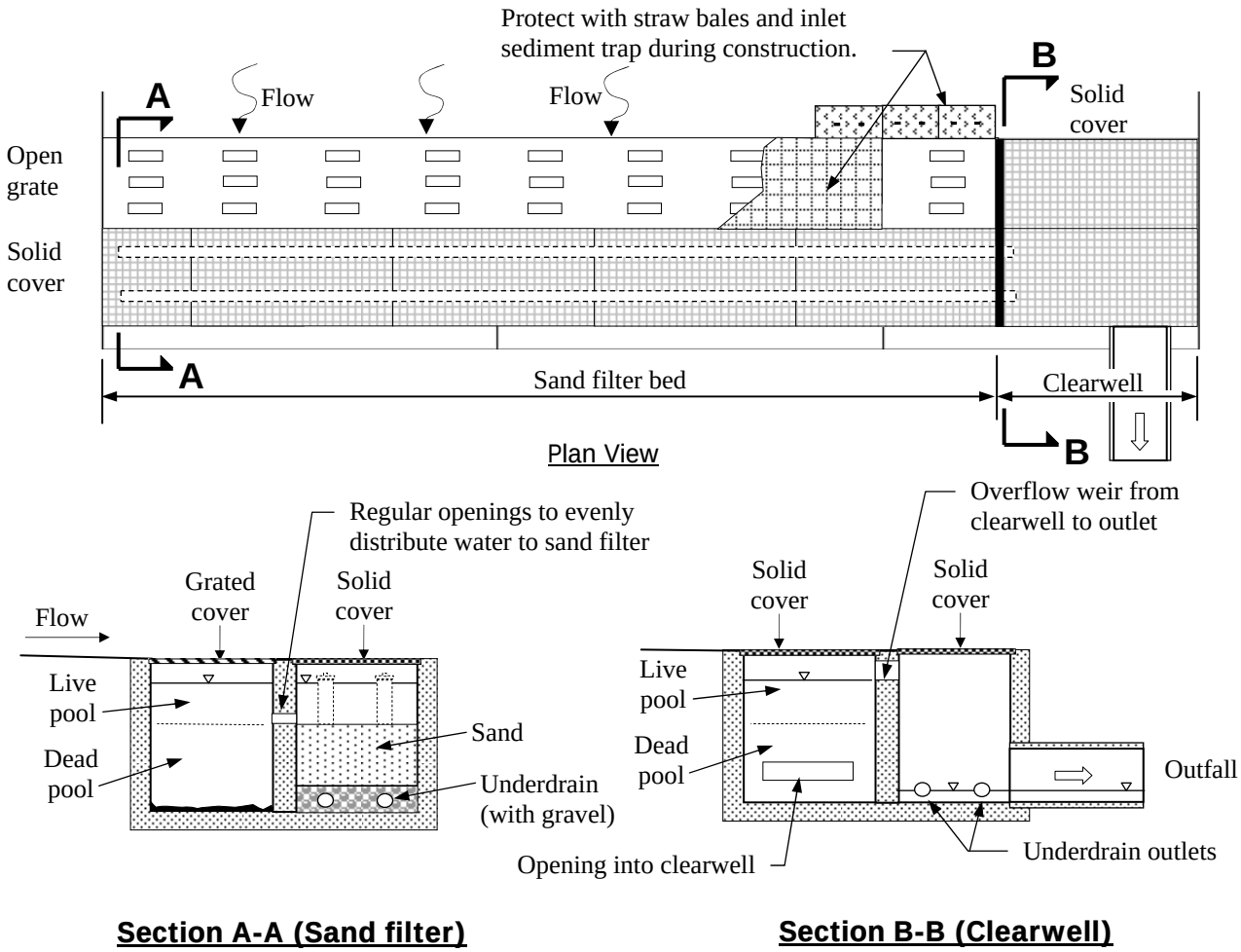

Figure ST-06-5
Delaware Sand Filter

NOT TO SCALE

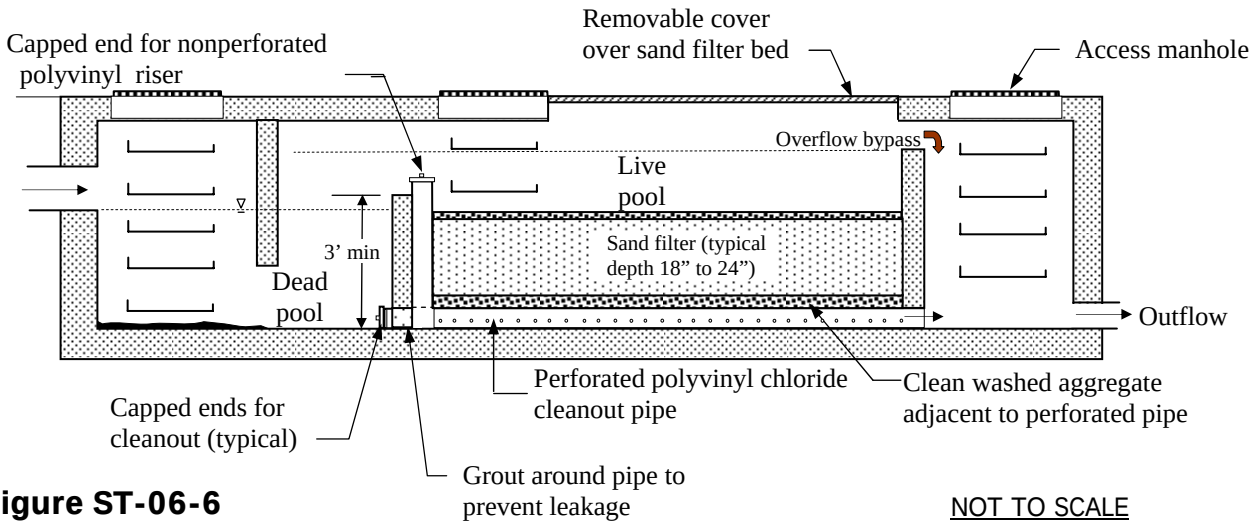

Figure ST-06-6
Underground Sand Filter

NOT TO SCALE

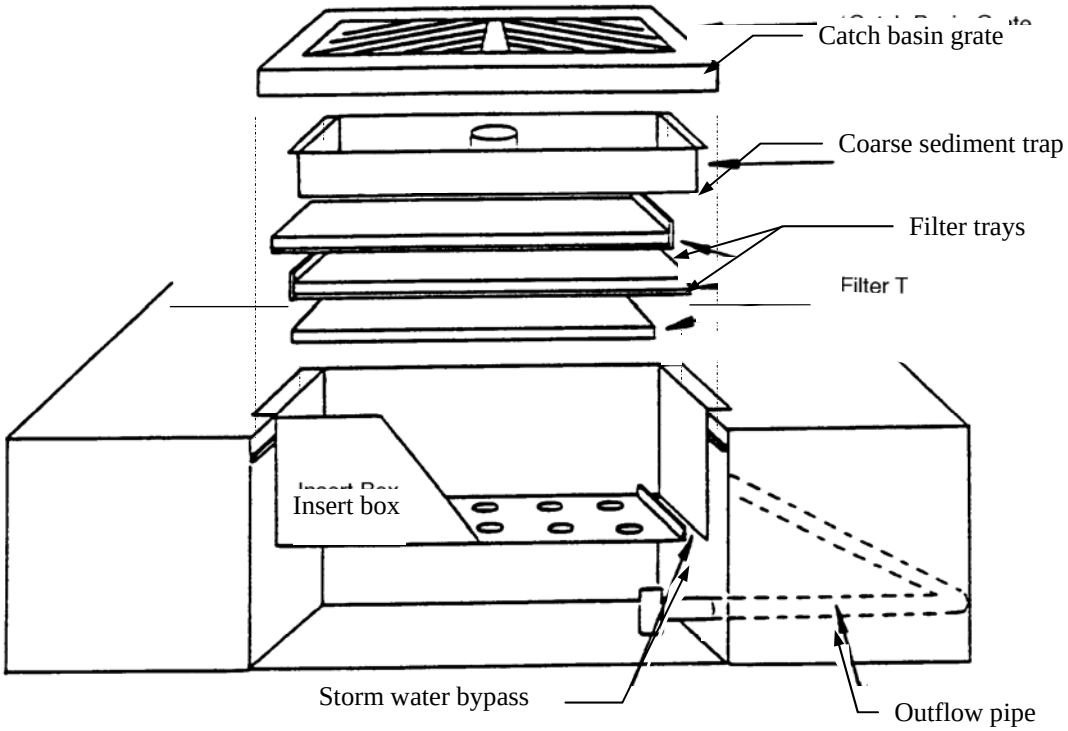

NOT TO SCALE

Figure ST-06-7
Typical Grate Inlet Filter (with Filter Trays)

Typical manufacturers of grate inlet inserts –

http://www.aquashieldinc.com

http://www.suntreetech.com.

http://www.abtechindustries.com

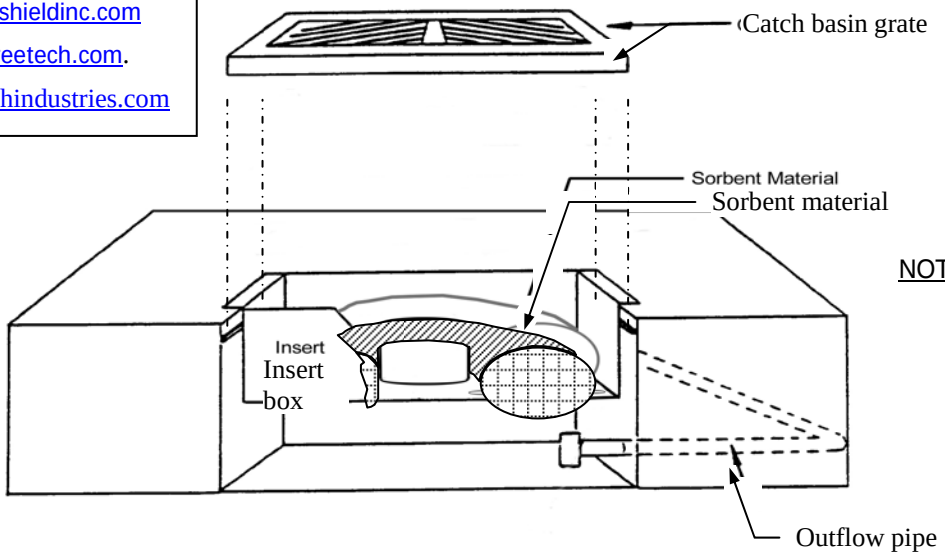

NOT TO SCALE

Figure ST-06-8
Typical Grate Inlet Filter (with Sorbent Material)

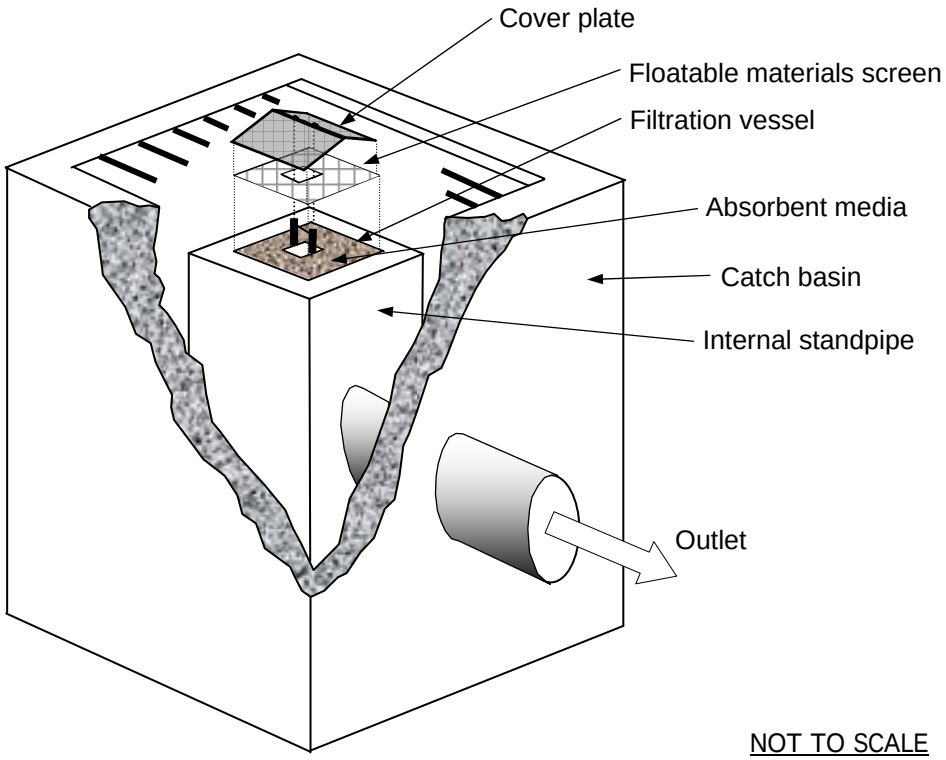

NOT TO SCALE

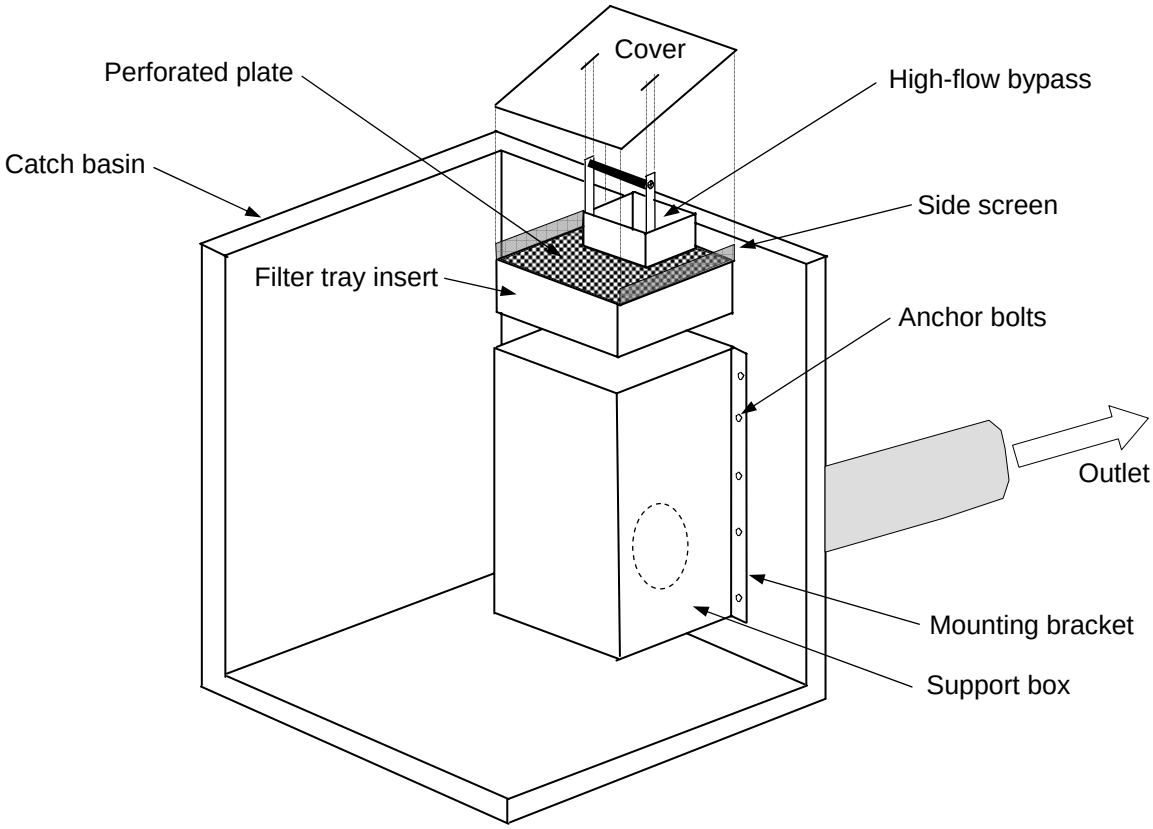

Figure ST-06-9
Clog-Resistant Media Filtration Inlets

ACTIVITY: Oil-Water Separator	ST – 07

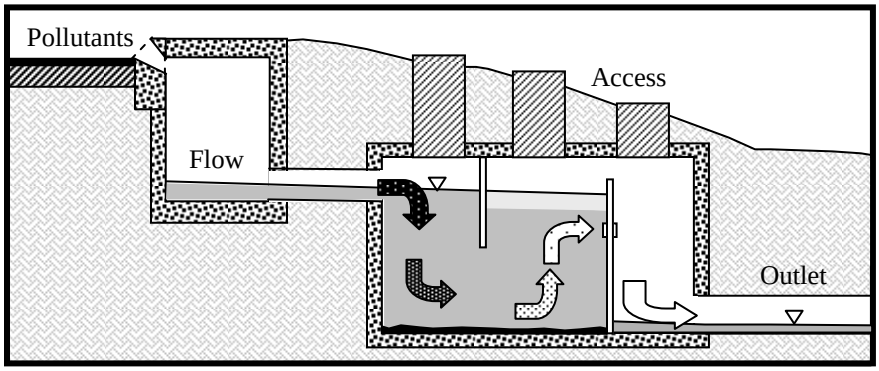

Targeted Constituents

● Significant Benefit ◗ Partial Benefit ○ Low or Unknown Benefit

● Sediment	● Heavy Metals	● Floatable Materials	◗ Oxygen Demanding Substances	
○ Nutrients	◗ Toxic Materials	● Oil & Grease	○ Bacteria & Viruses	○ Construction Wastes

Description

Oil-water separators are designed to specifically remove floating oil, gasoline, light petroleum compounds, and grease. However, most separators will generally remove floatable debris and coarse sediment in order to reduce maintenance and cleaning requirements. There are two main methods of intercepting oil: a conventional gravity separator and a coalescing plate interceptor (CPI). This practice will significantly reduce coarse sediment, floatable materials, oil and grease, and heavy metals that are typically associated with vehicle operations and automotive exhausts.

Suitable Applications

- Parking lots, streets, driveways, truck loading areas
- Runways, marinas, loading wharves
- Gasoline stations, refueling areas
- Automotive repair facilities, oil-change businesses, fleet maintenance yards
- Recycling or salvage yards that accept automotive equipment
- Commercial vehicle washing facilities

Discussion

Oil-water separators (also called oil-grit separators because most designs generally remove coarse sediment) are intended to remove floating gasoline, oil, grease, light petroleum products, and other floating liquids from storm water runoff. See ST-06, Water Quality Inlets and Media Filtration Inlets, for similar structures that also have some capabilities for removing oil and grease. Various systems discussed in this BMP should be evaluated for targeted constituents, site area constraints, cost, frequency of maintenance, reliability, and inspection requirements. Oil-water separators must be constructed with watertight joints and seals to be effective.

There are two basic types of oil-water separators (conventional and CPI), as displayed in Figure ST-07-1. Conventional separators rely upon gravity, physical characteristics of oil and sediments, and good design parameters to achieve pollutant removal. CPI separators contain closely spaced plates that greatly enhance the removal efficiency for oils and grease. In addition, a

variety of systems is commercially available in a range of layouts for which vendors have design data and procedures.

Oil-water separators are commonly used for industrial applications, which have a constant flow of known quantity. Separators are very efficient in these types of applications. However, it is much more difficult to remove smaller concentrations (such as 10 parts per million) from storm water runoff that has a much broader range of flows.

Due to many unknown variables concerning oil and grease pollutants, theoretical equations for oil separation are not usually applicable for storm water runoff. There is a variety of empirical guidelines when evaluating manufactured oil-water separators. The most important selection criteria are the long-term maintenance and operation costs, regular inspections, and cleanout procedures. The oil-water separator system should only be constructed if: 1) there is a maintenance plan to regularly inspect and maintain the oil-water separator on a long-term basis, and 2) there is an agreement or fiscal guarantee that the required maintenance resources will be available for the life of the system. Without regular inspection and maintenance, an oil-water separator will fail and generally create a worse pollution problem.

Another very important decision is whether to bypass large storm events around the oil-water separator without damaging the system, exceeding design flow capacity, or resuspending collected pollutants. For larger storm events, storm water runoff will become turbulent and remix the oil droplets. Large flows can also scour sediments that have been deposited on the bottom of an oil-water separator over the course of several months. Essentially, pollutant removal is only ensured when the oil-water separator is cleaned out regularly and the sediments are properly analyzed and disposed.

Storm water runoff is only detained briefly within oil-water separators because of size constraints for an engineered structure. Therefore, it is important that all factors leading up to the separator and also downstream from the separator are favorable for its effective operation. An oil-water separator is frequently used as the upstream measure in a series of storm water treatment BMPs, ahead of a detention basin or constructed wetland. Advantages of an oil-water separator may include:

- Efficient use of valuable space (since it is usually located underground)
- Does not require as much vertical drop as some other types of BMPs
- Easily accessible and easy to clean with proper equipment
- Reliable if carefully designed (including upstream and downstream reaches)

Typical Design Parameters

A scientific basis for sizing oil-water separators relies upon the rising velocity of oil droplets and the rate of runoff through the system. However (other than storm water from oil refineries), there is generally no relevant method for describing the characteristics of petroleum products in urban storm water. It is

known that conventional oil-water separators are probably not efficient for removing oil droplets with diameters smaller than 150 microns. For instance, Figure ST-07-2 shows a size distribution for which a CPI oil-water separator would be more effective.

Therefore, design is performed on the basis of engineering judgment and guidelines. Design procedures for commercially available oil-water separators are usually given by simplified tables or graphs based on field testing and observed pollutant removal rates. It is desirable to maintain reasonable dimensions by bypassing larger flows in excess of the 1-year storm rainfall rates (preferably by placing the separator "offline" rather than "online"). An offline separator can be an existing or proposed manhole with a baffle or other control (shown in Figure ST-07-3). Bypass mechanisms must minimize potential for captured pollutants from being washed out or resuspended by large flows.

Some petroleum products may become attached to coarse sediments that are easily removed in the first chamber. A significant percentage of petroleum products also become attached to fine suspended solids and therefore are not removed by settling or flotation. Consequently, the performance of oil-water separators can be difficult to estimate prior to installation and monitoring.

Theoretical Oil Separation

The theoretical sizing of a conventional oil-water separator could be performed using Stokes Law for the computation of rise velocity of oil droplets. The rise velocity is:

$$V_p = (1.79 \times 10^{-8} \ (S_w - S_p)\ (D_P^2)\ ) / N$$

V_p = upward rise velocity of petroleum droplet (in feet per second)
S_p = specific gravity of the petroleum droplet (typically 0.85 to 0.95)
S_w = specific gravity of water (0.998 to 1.000)
D_P = diameter of petroleum droplet to be removed (in microns)
N = absolute viscosity of water (in poises)

The expected temperature is generally chosen for cold winter months. Typical values for the specific gravity and absolute viscosity of water at various temperatures are:

32° F	S_w = 0.999	N = 0.01794
40° F	S_w = 1.000	N = 0.01546
50° F	S_w = 0.999	N = 0.01310
60° F	S_w = 0.999	N = 0.01129
70° F	S_w = 0.998	N = 0.00982

For example, consider the effluent goal as 10 parts per million (ppm) and the design influent concentration is estimated to be 50 ppm (or equivalent to 50 milligrams per liter) so that a removal efficiency of 80% is the desired target. From Figure ST-07-2, this is achieved by removing all droplets with diameters 90 microns or larger. Assume an oil droplet specific gravity of 0.90. With water temperature of 32° F, the upward rise velocity is 0.00080 feet per second (or 1 foot in 21 minutes). With a water temperature of 60° F, the upward rise velocity is 0.00127 feet per second (1 foot in 13 minutes).

There are many difficulties in attempting to use this equation in a design situation. It is impossible to estimate density or size distribution of petroleum products accumulating on streets and parking lots. Initially, unleaded gasoline has a specific gravity of 0.80, kerosene has a specific gravity of 0.81 to 0.84, diesel fuel has a specific gravity of 0.83 to 0.85, and No. 2 home heating fuel has a typical gravity of 0.86. However, lighter portions of these products evaporate quickly. It is not certain whether smaller oil droplets (less than 150 microns) will rise in water unless formed into larger oil droplets by coalescing; otherwise, they are more likely to be emulsified into the storm water.

Sizing guidelines for a conventional oil-water separator are derived from references 6 and 31 using a design flow rate, Q.

$$D = (Q / RV_H)^{0.5} \qquad V_H = 15\,(V_P) \quad \text{or} \quad V_H = 0.05 \text{ feet/second}$$
$$W = R\,D$$
$$L = (V_H\,D) / V_P$$

D = depth of unit (feet), generally between 3 and 8 feet
W = width of unit (feet), usually twice the depth
L = length of unit (feet), usually fifteen times the depth
Q = design flow rate (cfs)
R = width to depth ratio, generally a value of 2 is recommended
V_H = allowable horizontal velocity (maximum 0.05 fps)
V_P = upward rise velocity of petroleum droplet (fps)

Adjust the total depth D by adding 1 foot of freeboard. Other design parameters are that top baffles should extend downward by 0.85 D and bottom baffles should extend upward by 0.15 D. Locate the distribution baffle at a distance of 0.10 L from the inlet end of unit. If depth exceeds 8 feet, then design parallel units to receive proportional flow or use a smaller sub-basin. Some sort of physical mechanism should be installed to allow flow bypasses for storms in excess of the design flow. Most impervious sub-basins have a rational runoff coefficient of at least 0.90 and a time of concentration in the neighborhood of five minutes. The following example shows an impervious parking lot containing 1 acre and a treated intensity of 1 inch per hour. Using computed V_P from previous page, the allowable horizontal velocity V_H is:

V_H = 15 x 0.0008 = 0.012 feet per second (less than 0.05 feet per second)
Q = CIA = (0.95) (1) (1) = 0.95 cfs

D = $(Q / RV_H)^{0.5} = (1.52 / (2 \times 0.012))^{0.5}$ = 6.3 feet
W = 2 x 6.3 feet = 12.6 feet
L = 15 x 6.3 feet = 95 feet

Conventional Oil-Water Separator

The very large size chamber (6′ x 13′ x 95′) computed above represents the fact that oil and water do not separate easily. By careful design of upstream and downstream reaches, it is possible to reduce turbulent flows, drop heights, mixing or swirling storm water runoff, and excessive velocities. It is highly recommended that maximum sub-basin size for an oil-water separator should be no larger than 1 acre; this will keep units to manageable sizes and allow for accurate monitoring of storm water quality.

Figure ST-07-4 (based upon Maryland standards and taken from reference 154) shows a typical design for a conventional oil-water separator, with slightly different features than those shown in Figure ST-07-1 (based upon California standards). The basic flow layout of Figure ST-07-4 provides: 1) uniform tranquil flow, 2) a trash rack or other narrow opening to prevent trash and debris from flowing through, 3) a chamber for settling sediments and solids, 4) a chamber to capture floating oil and grease, and 5) access for each chamber, preferably with steps and large openings. The first two chambers for Figure ST-07-4 should provide at least 400 cubic feet of permanent pool storage per acre. Both chambers must be cleaned regularly to remove floating oils and grease from the top and sediments from the bottom. Perform maintenance by using a conventional vacuum truck for both chambers, being careful not to discharge any pollutants to the storm water outfall.

Manufactured Oil-Water Separators

A few manufacturers of oil-water separators are included in this BMP. Manufactured separators should be selected on the basis of good design, suitability for desired pollution control goals, durable materials, ease of installation, and reliability. The product list is not intended to be inclusive, nor is it intended to be an endorsement for each listed product. It is merely a list of separator manufacturers that are known to work in the Tennessee area.

Manufacturers generally provide design methods, installation guidelines, and proof of effectiveness for each application where used. These structures tend to include innovative methods of providing high-flow bypass. However, it is incumbent upon the landowner to carefully investigate the suitability and overall trustworthiness of each manufacturer and/or subcontractor. <u>Oil-water separators must be constructed with watertight joints and seals to be effective.</u>

Examples of oil-water separators illustrated in this BMP include:

Figure ST-07-1 Highland Tank (CPI unit) www.highlandtank.com

Figure ST-07-5 Contech Stormwater Solutions www.vortechnics.com

Figure ST-07-6 CDS Technologies www.cdstech.com

Figure ST-07-7 Stormceptor Corporation www.stormceptor.com

Figure ST-07-8 Downstream Defender

Figure ST-07-9 BaySaver, Inc. www.baysaver.com

Other manufacturers may also include:

Aquashield, Inc. Aqua-Swirl Concentrator www.aquashieldinc.com

Environment 21, LLC V2B1 www.env21.com

Each manufacturer may specify its design based upon an average design storm in order to achieve the recommended pollutant efficiency. The 1-year design storm intensity may be computed from the peak incremental rainfall distribution from the Natural Resources Conservation Service Type II storm, for which 0.276 of total rainfall occurs in the most intense 15-minute period sometime during the twelfth hour. So then the 15-minute time of concentration is 0.276 x 2.5" / (0.25 hours) = 2.76 inches per hour. It is recommended that the oil-water separator should capture and treat the 1-year design storm. Other storms that are mentioned in the vendor catalogs are also the 6-month design storm (80% of the 1-year storm) and the 3-month design storm (62% of the 1-year storm).

Coalescing Plate Interceptor

The CPI separator requires considerably less space than a conventional separator to obtain the same effluent quality. The angle of the plates to the horizontal ranges from 0° (horizontal) to 60°, with a typical plate spacing of 1 inch. Storm water will either flow across or down through the plates. A CPI oil-water separator is able to process smaller oil droplets by collecting them on polyurethane plates or other materials. It is recommended that the design engineer consult vendors for a plate package that will meet site and flow criteria. Manufacturers typically identify the capacity of various standard units. The basic equation for design of coalescent plates is:

$A_P = Q / (E \ V_p \cos(H))$

A_P = total surface area of coalescing plates (square feet)

Q = design flow (cfs)

E = efficiency of coalescent plates (typically 0.35 to 0.95)

V_P = upward rise velocity of oil droplet (fps), typically use 0.0010 fps
H = angle of coalescing plates measured from horizontal (degrees)

The angle of coalescing plates to the horizontal may range from 0° to 60°. However, at an angle of 0°, the plates would be horizontal and subject to having sediment settle on them. At an angle of 45° to 60°, sediment would be able to slide off and collect at the bottom. The spacing between plates is usually about 1 inch. Select a likely length and width of coalescing plate, and then compute the number of plates needed, N.

$N = A_P / W_P L_P$
N = number of plates required
W_P = width of plate
L_P = length of plate

Check geometry and necessary volume to contain the coalescing plates. Allow 1 foot below the plates for sediment storage. Add 6 to 12 inches above plates for oil to accumulate, and then allow an additional 1 foot above that for freeboard. Include a forebay to collect floatable debris and evenly distribute flow if more than one plate unit is needed. Larger units have a device to remove and store oil from the water surface, such as a skimmer or vacuum. Plates are easily damaged when removed for cleaning. Install plates at an angle of 45° to 60° so that most sediments slide off. Placing plates closer together reduces the total volume, but may instead allow debris such as twigs, plastics, or paper to clog plates. Use a trash rack or screen to reduce clogging.

Maintenance

Follow vendor recommendations for manufactured oil-water separators. The following general instructions may be used in the absence of conflicting data or guidelines.

- Oil-water separators should be inspected on a regular basis (such as every three months) to ensure that accumulated oil, grease, sediment, trash, and floating debris do not disturb the proper functioning of the system. Record observations in an inspection log and take pictures as necessary to document conditions. Make immediate repairs as needed, and make arrangements for cleanout if needed. Consider using a licensed commercial subcontractor, who may have special equipment and abilities to perform periodic cleanout on oil-water separators.

- Perform cleanout on regular basis using confined-space procedures and equipment as required by Occupational Safety and Health Administration regulations, such as nonsparking electrical equipment, oxygen meter, flammable gas meter, etc. Remove trash and debris and dispose properly. Remove floating oil, grease, and petroleum substances using special vacuum hoses; treat as hazardous waste. Sediments may also contain heavy metals or other toxic substances and should be handled as hazardous waste. Removal of sediment depends on accumulation rate, available storage, watershed size, nearby construction, industrial or

commercial activities upstream, etc. The sediment composition should be identified by testing prior to disposal.

- Some sediment may contain contaminants for which the Tennessee Department of Environment and Conservation (TDEC) requires special disposal procedures. Consult TDEC — Division of Water Pollution Control (368-7939) if uncertain about what the sediment contains or if it is known to contain contaminants. Generally, give special attention or sampling to sediment accumulated in industrial or manufacturing facilities, fueling centers or automotive maintenance areas, large parking areas, or other areas where pollutants are suspected to accumulate.

Limitations

- There is usually uncertainty about what types of oil or petroleum products may be encountered. A significant percentage of petroleum products are attached to fine suspended solids and therefore are not easily removed by settling.

- The design loading rate for oil-water separators is low; therefore, they can only be cost-effectively sized to detain and treat nuisance and low storm flows and particularly first flush volumes. It is usually not economical or feasible to size an oil-water separator to treat a design storm with a return period longer than 1 year. Oil-water separators require frequent periodic maintenance for the life of the structure. Maintenance can be minimized (and performance can be increased) by careful planning and design, particularly upstream and downstream from separator.

References

6, 12, 31, 33, 67, 77, 107, 154, 166, 179, vendor information (see BMP Manual Chapter 10 for list of references)

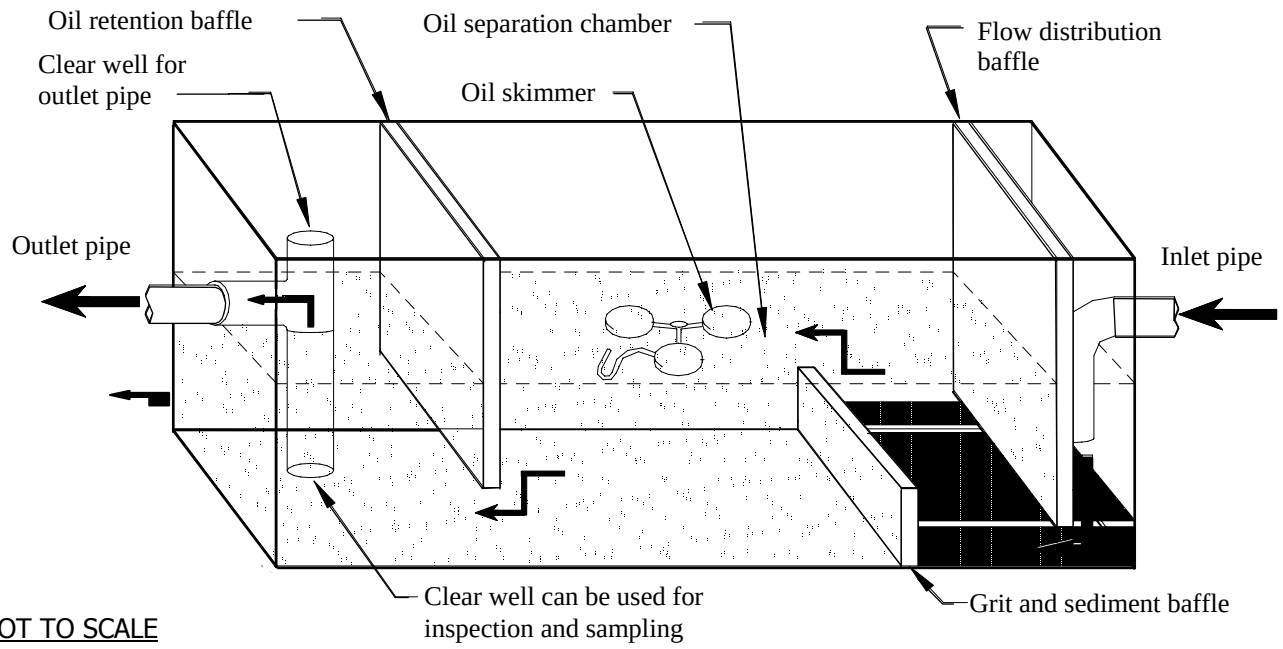

Conventional Oil/Water Separator

Provide access hatches or manhole covers for each compartment of an oil-water separator. Size openings to adequately convey all expected maintenance equipment and tools.

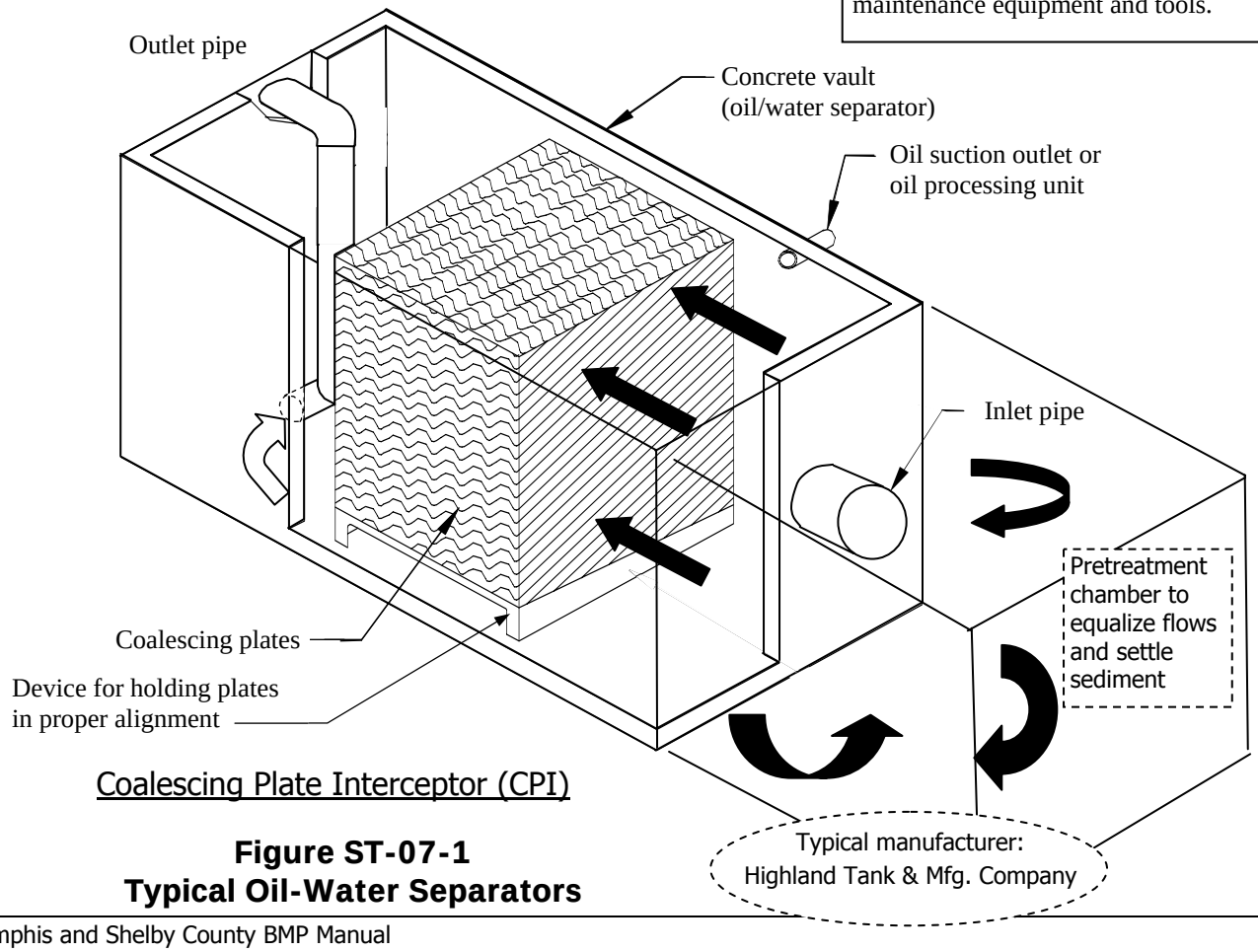

Coalescing Plate Interceptor (CPI)

Figure ST-07-1
Typical Oil-Water Separators

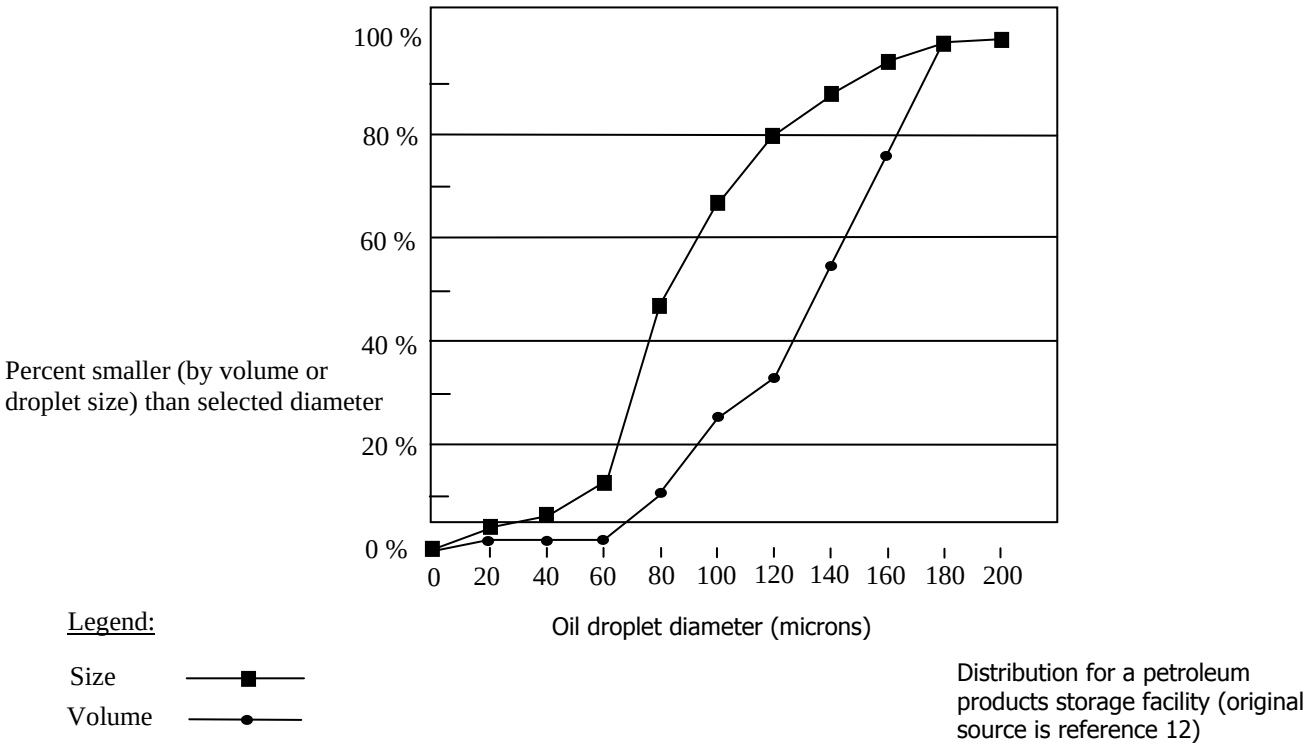

Figure ST-07-2
Typical Size and Volume Distribution of Oil Droplets

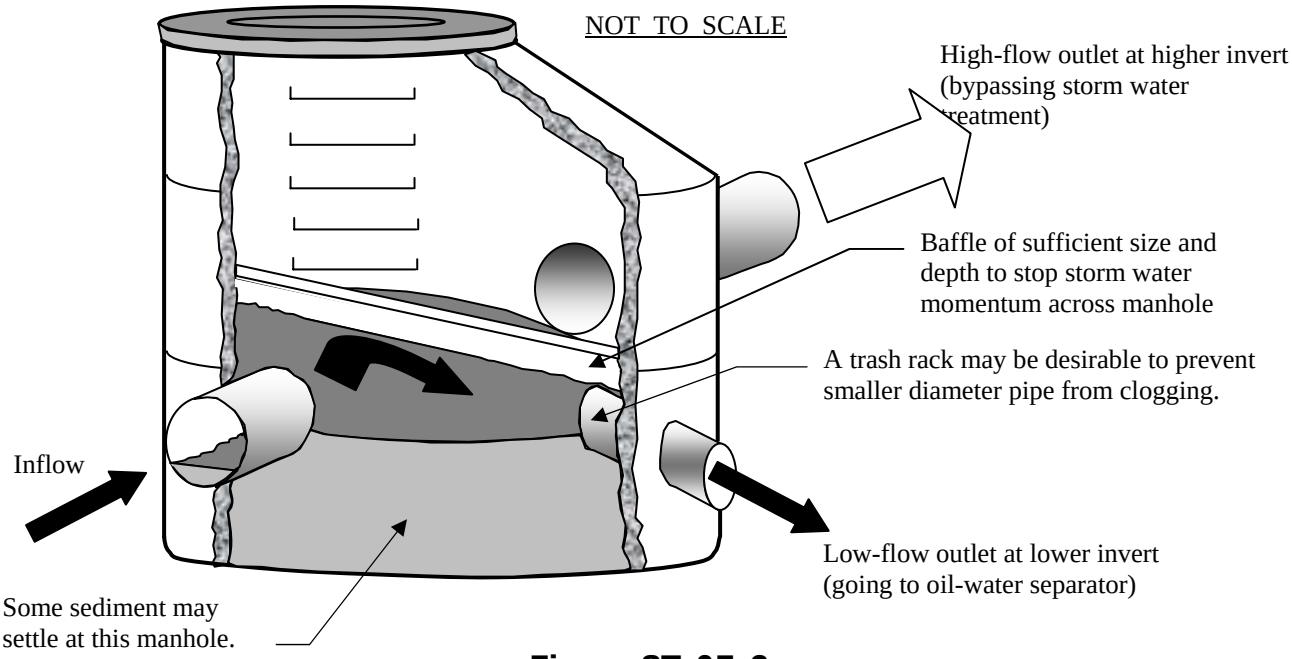

Figure ST-07-3
Typical Storm Water High-Flow Bypass Manhole

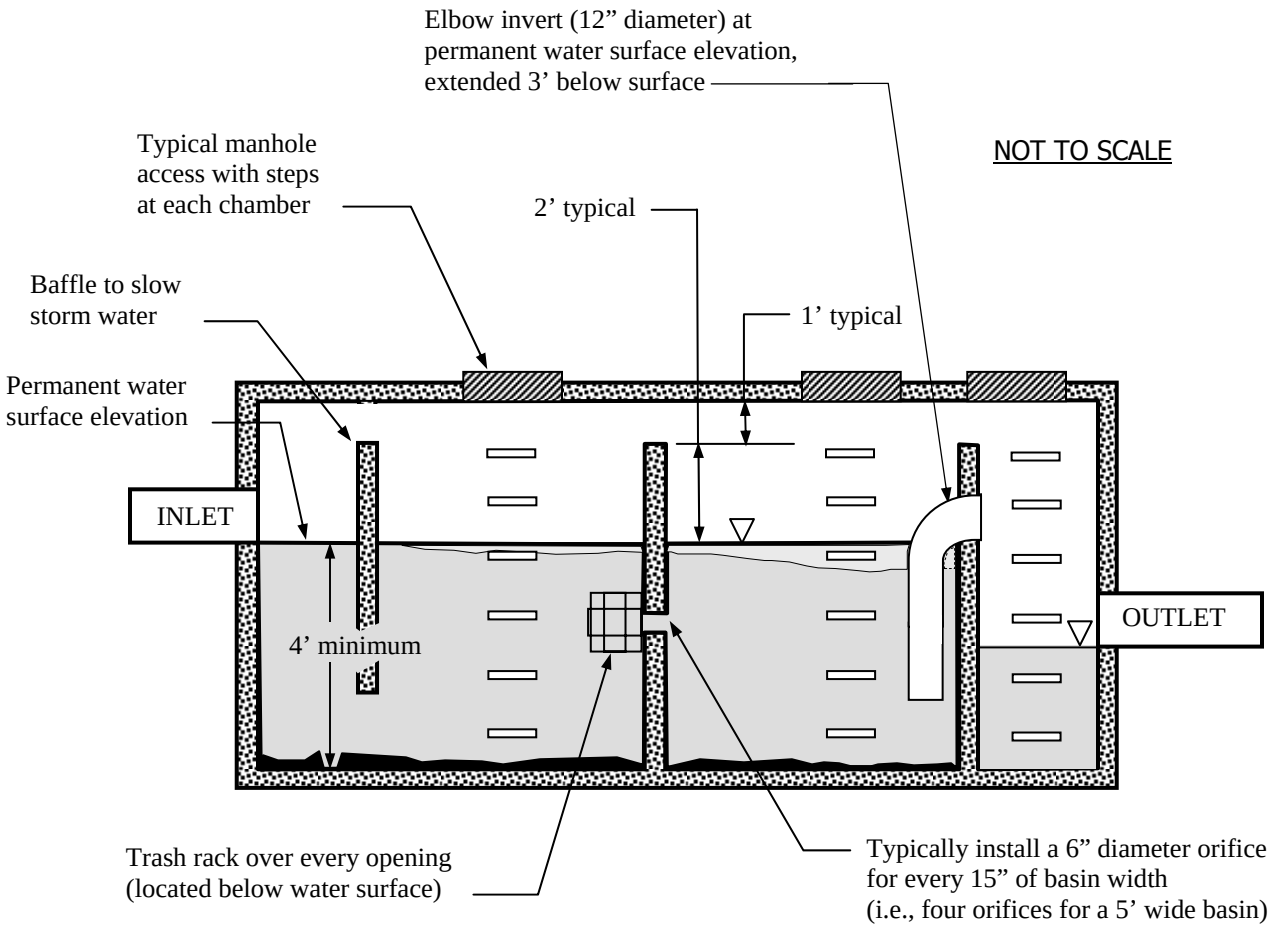

Notes:

1. Provide low velocities entering the oil-water separator and minimize opportunities for turbulence and mixing. Prevent backwater conditions downstream from the oil-water separator.
2. Minimum permanent pool storage shall be 400 cubic feet per acre of contributing drainage area.
3. Place 6″ diameter orifices and 12″ diameter pipe elbows across the internal walls to distribute flow evenly across the separator. Reduce or eliminate dead spots (or ineffective flow areas) in order to increase pollutant removal.
4. Label manhole lids so that the structure is easily identified as an oil-water separator. It may be necessary to control the type of truck traffic that is allowed to travel or park over a large oil-water separator.

Figure ST-07-4
Conventional Oil-Water Separator

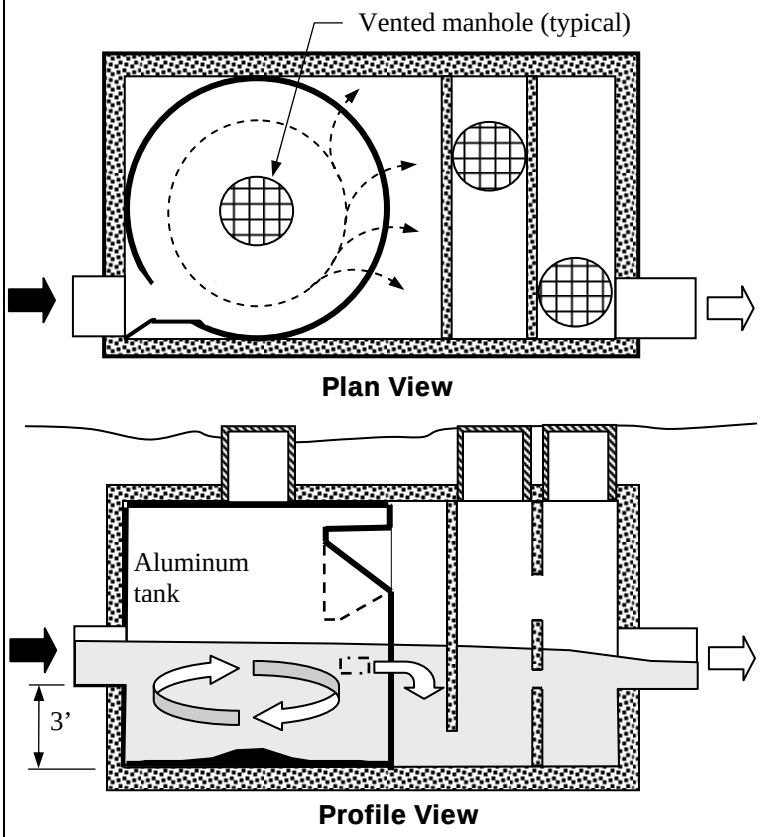

Notes:

1. This figure represents the Vortechs storm water treatment system, which uses swirl action to settle grit and sediments.
2. Vortechs specifies a ¼" thick aluminum tank for the swirl chamber and 6" thick concrete walls for vault.
3. Inside width = tank diameter Inside length = diameter + 5' or so Inside height = 6' to 9'
4. Inlet pipe and outlet pipe may be located on side of structure. A side inlet is optimal for swirling action.
5. Use vented and labeled manhole lids so that the structure is easily identified as an oil/water separator. Vortechs recommends minimum structural design for H-20 vehicle loading.

NOT TO SCALE

Figure ST-07-5
Typical Detail for Swirl Oil-Water Separators

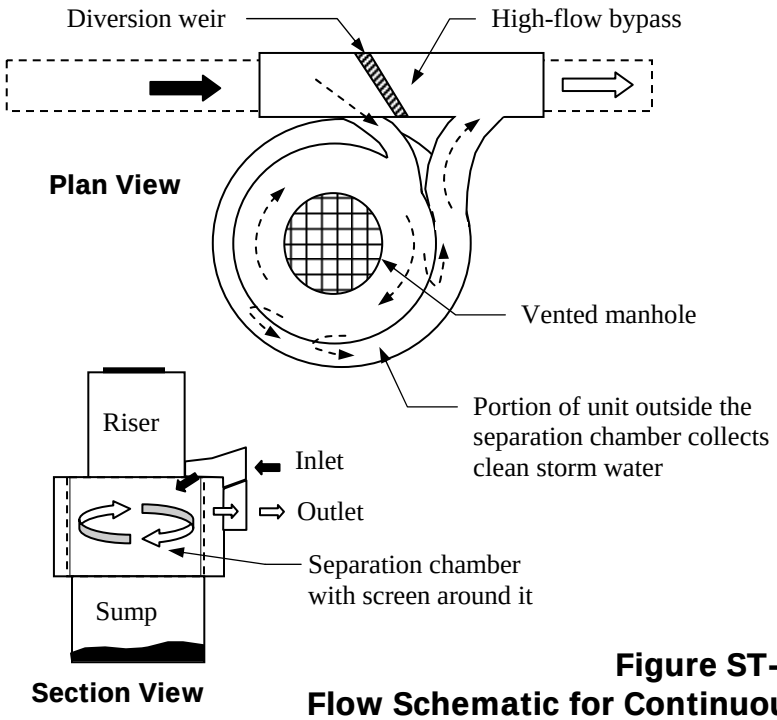

Notes:

1. This figure represents the continuous deflection storm water treatment as manufactured by CDS Technologies. Units can also be retrofitted onto existing storm drains.
2. Units are manufactured from either fiberglass or precast concrete.
3. Manufacturer recommends the use of sorbent material within CDS separation chamber to improve capture of oil and grease. Usage rate is typically several pounds of sorbent per acre per year.

NOT TO SCALE

Figure ST-07-6
Flow Schematic for Continuous Deflection Separators

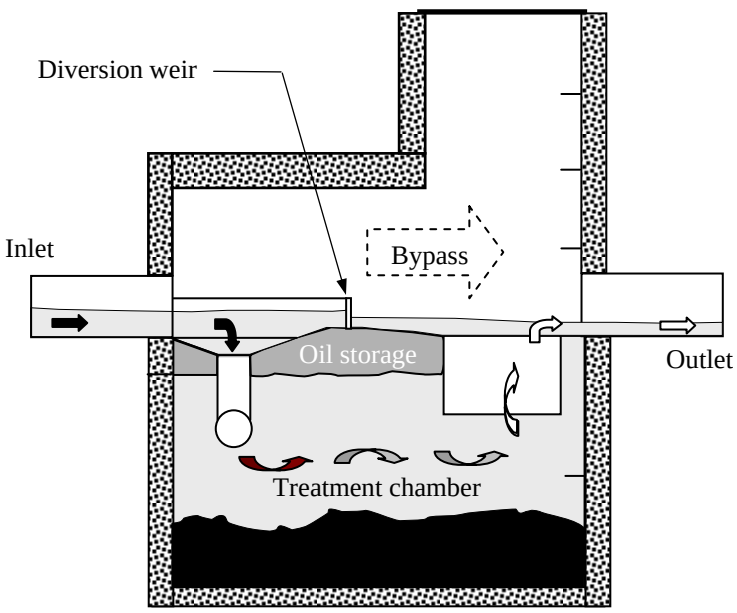

Notes:

1. This figure represents a single-unit system designed to process storm water runoff on-line, as manufactured by Stormceptor Corporation.
2. Unit consists of an insert placed into a standard concrete manhole. Basic size is 72" diameter, with larger sections used for the treatment chamber as needed.

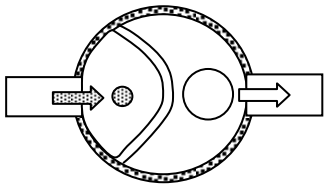

Plan View

NOT TO SCALE

Figure ST-07-7
Oil-Water Separator (Stormceptor)

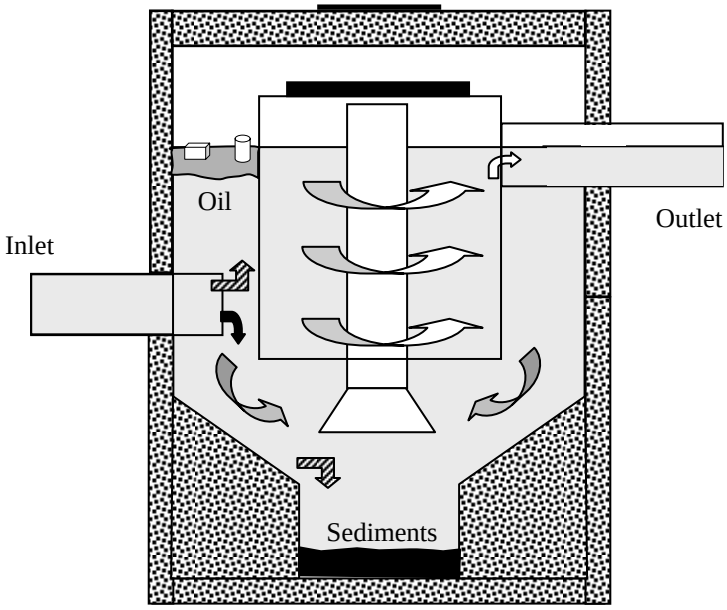

Notes:

1. This figure shows a single unit to treat storm water runoff, manufactured by H.I.L. Technologies, Inc.
2. Unit consists of polyethylene components supported by a stainless steel frame, inserted into a standard concrete manhole. Concrete manhole sizes vary from 4' to 10'.

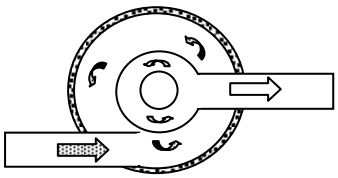

Plan View

NOT TO SCALE

Figure ST-07-8
Oil-Water Separator (Downstream Defender)

Notes:

1. This figure represents the BaySaver separation system, an offline unit that divides flows into low, medium, and high regimes.
2. The unit can be retrofitted onto existing storm drain system or installed as part of a new storm drain system, using two standard precast concrete manholes.

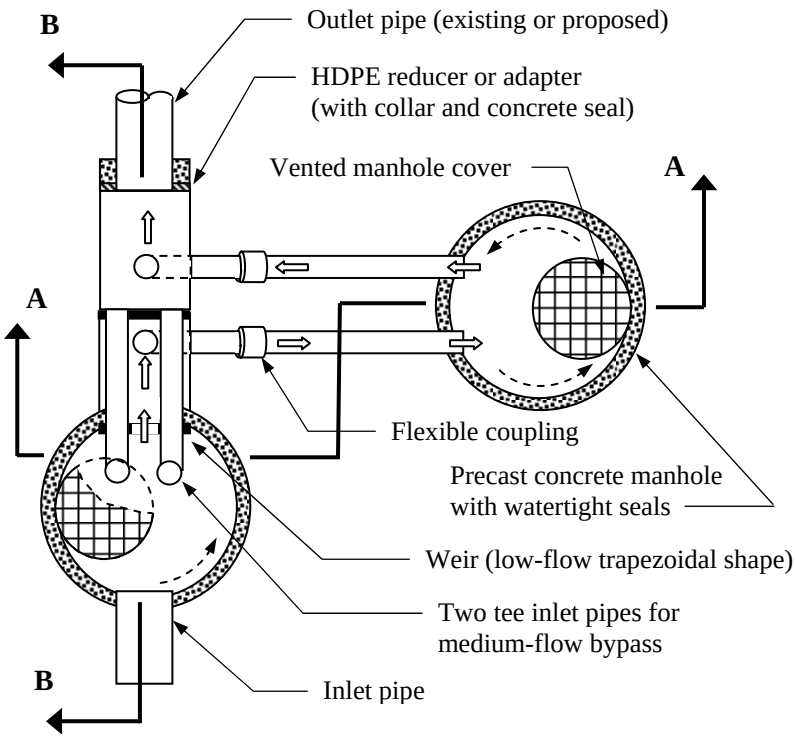

Plan View (with low flow)

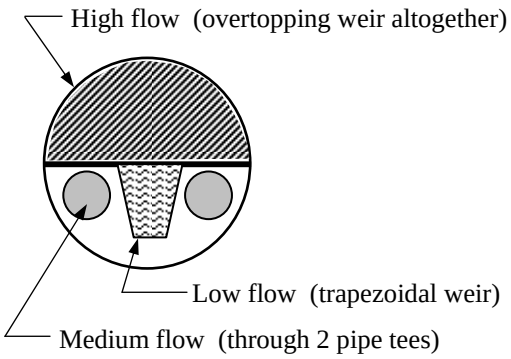

Close-up of Section A-A (flow control)

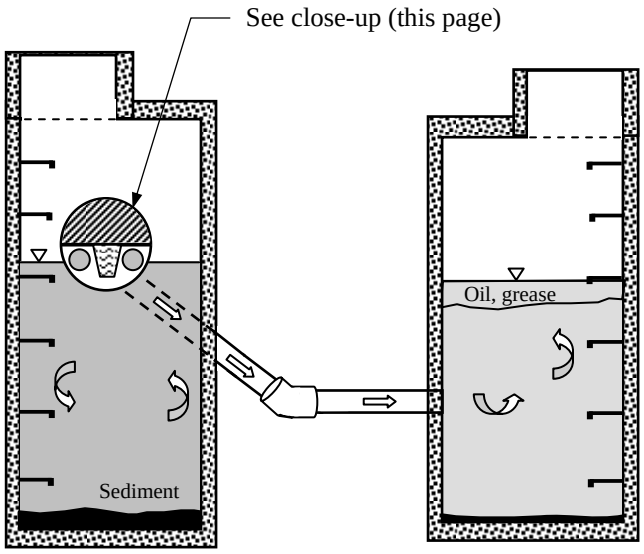

Section A-A (with low flow)

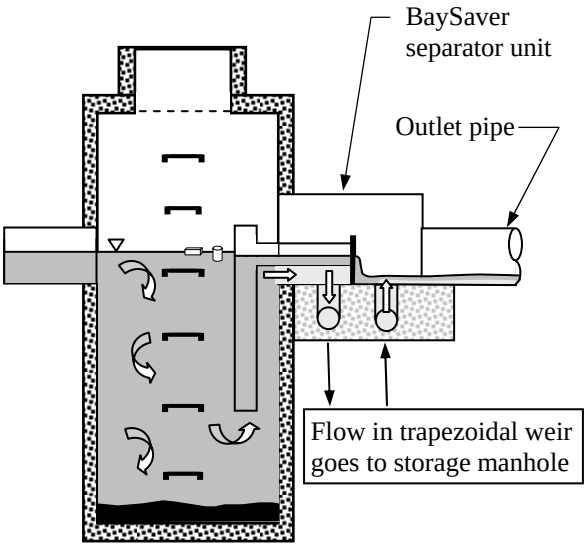

Section B-B (with medium flow)

NOT TO SCALE

Figure ST-07-9
Flow Schematic for Dual Tank System

ACTIVITY: Underground Detention	ST – 08

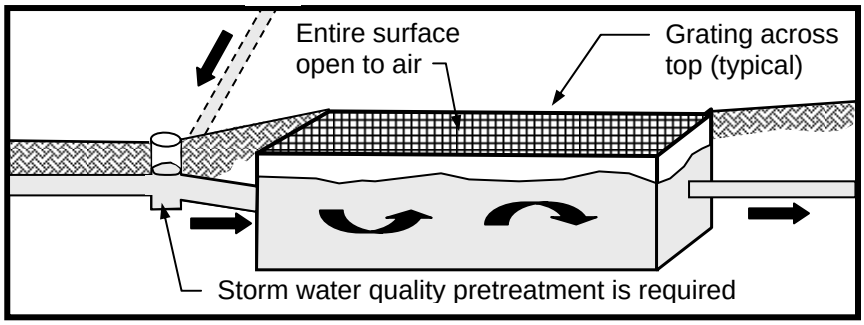

Targeted Constituents

● Significant Benefit ◗ Partial Benefit ○ Low or Unknown Benefit

◗ Sediment	○ Heavy Metals	◗ Floatable Materials	○ Oxygen Demanding Substances	
○ Nutrients	○ Toxic Materials	○ Oil & Grease	○ Bacteria & Viruses	○ Construction Wastes

Description Underground detention is the use of large underground structures to provide necessary volumes for attenuating storm water peak flows. Underground detention is sometimes desired in areas where the cost of land is high enough to justify the additional construction, maintenance, and operating costs. Underground detention structures generally provide little or no storm water quality benefits. Potential applications could include very large development projects (such as regional shopping malls) for which the cost of providing underground detention structures would not be prohibitive.

Approach **Memphis and Shelby County have a policy against underground detention structures due to many observed problems in local applications and the potential for future problems.** Underground detention structures are very strongly discouraged for several reasons:

- The cost of building underground structures is usually prohibitive when compared to dry detention basins, and this may cause some developers and contractors to illegally reduce detention volume or alter construction details in an effort to contain costs.

- It is very difficult to inspect underground structures, particularly if entering the structure qualifies as confined space entry (which is controlled by Occupational Health and Safety Administration [OSHA] safety regulations). Cleanout and maintenance costs will need to be provided for and budgeted indefinitely.

- Underground structures may not receive enough air and proper ventilation to avoid anaerobic conditions and dangerous flow conditions.

- Storm water runoff quality is not substantially improved or enhanced by underground detention. Underground structures do not allow grass or other vegetation to absorb nutrients, minerals, or pollutants from storm water runoff. Underground structures do not take advantage of natural storm water infiltration into the ground surface.

Therefore in most instances, underground detention facilities are not allowed.

The city or county engineer could potentially allow such a facility if designed and constructed in accordance with good engineering practices by reliable and proven contractors of local reputation. The following minimum requirements must be followed in the potential design and construction of an underground detention facility:

1. The entire area of the underground detention structure must be open to the air surface directly above, either with no cover or by installing continuous grates across the top. This allows for inspection and maintenance of the entire facility with sunlight to provide the primary means of illumination. The facility will consider public safety and access (locks, fences, curbs) and is often designed to withstand truck loading such as HS-15 or HS-20. Access to the system shall be provided via a City of Memphis standard manhole, at a maximum spacing of 200 feet, on the upstream and downstream end of the system and at any changes in direction or grade.

2. The underground detention structure must be constructed of durable materials with a typical 100-year lifetime. Detention storage volume shall not include the porous space within a stone or gravel bed (commonly done in many states for a series of pipes or pipe arches under parking lots).

3. The underground detention structure shall be designed to have positive drainage into the receiving channel, assuming that there is a 10-year flood in the receiving channel. This ensures that the designed volume is used for onsite detention rather than containing offsite floodwaters.

4. The underground detention structure shall not receive surface runoff directly from parking lots through the top opening. Surface runoff shall be directed to a BMP that improves storm water quality, such as an oil-water separator or grass filter strips. The underground structure will usually have a curb or other barrier around the top to prevent this. In addition, trash and debris must be prevented from clogging inlets to the structure.

5. Design measures must be taken to trap and store sediments in locations where cleanout and maintenance can be easily performed. This generally requires that some type of water quality inlet or other storm water treatment BMP must be installed upstream from the underground detention facility.

6. Good design practices also require that structural measures shall be in place to prevent blockages. Floatable waste materials shall be collected

by trash racks for periodic removal. The underground detention structure shall have a positive means of being dewatered for inspection and maintenance purposes. The outlet structure shall include a trash screen or trash rack with a minimum bar spacing (center to center) equal to one-half the minimum dimension of the outlet control, unless the outlet control is 12 inches or greater in diameter. The trash screen shall be designed to allow removal for easy cleaning. The outlet structure shall include manhole and an inlet grade or other means of access to permit inspection, cleaning, and other maintenance. In the event that the orifice or other control device becomes clogged, the outlet structure shall provide for bypass flow, without overflow entering a public right of way.

7. A postconstruction runoff control plan, including inspection schedules and guidelines, must be submitted and approved. Evidence of responsibility and financial budgeting must be presented, in addition to the usual bonds and agreements necessary for all detention structures.

8. The pipes shall be a minimum of 24 inches in diameter. Arch or elliptical pipe is acceptable with the same minimum and maximum "equivalent" cross-sectional area.

9. The system shall not be part of the conveyance system for adjacent properties, except in cases where small portions of the adjacent property enters the site as sheet flow. The system shall not be in-line with any portion of the public drainage system.

10. The system shall be in an easily accessible location. No permanent structure shall be constructed over the detention basin. And the plat shall specifically allow entrance by the city and/or county.

11. The owner or his representative shall inspect the system at least annually, and any deficiencies noted in the inspection shall be repaired within 60 days of the date of the inspection. A report detailing the findings of the inspection shall be submitted to Memphis or Shelby County within 30 days of the anniversary date of the acceptance of the project. The owner and his representatives should be aware that inspection of an underground detention system is considered a confined space entry and take all necessary precautions in accordance with OSHA regulations. Exemptions to this policy require the prior, site-specific approval of the city or county engineer.

The above requirements do not allow for the use of large-diameter pipes in a gravel layer or envelope. Arch culverts filled with stone and gravel, or even masonry block structures, were frequently used to provide storm water detention/infiltration underneath parking lots. Underground detention structures were promoted a few decades ago as a common means of detention in many areas of the country, particularly under parking lots. Most states and cities now discourage underground detention.

References **103, 153, 154, 180, vendor data** (see BMP Manual Chapter 10 for list)

ACTIVITY: Multiple Systems | ST – 09

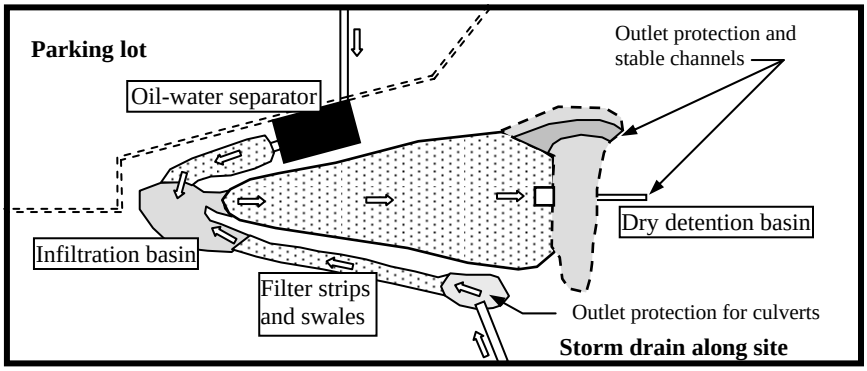

Targeted Constituents

● Significant Benefit ◗ Partial Benefit ○ Low or Unknown Benefit

◗ Sediment	◗ Heavy Metals	◗ Floatable Materials	◗ Oxygen Demanding Substances	
◗ Nutrients	◗ Toxic Materials	◗ Oil & Grease	◗ Bacteria & Viruses	◗ Construction Wastes

Description

It is often beneficial to use multiple storm water treatment BMPs, either in series or in parallel. Possible reasons may include:

- Proximity to environmentally sensitive areas
- Enhanced reliability or improved performance
- Large expected pollutant loading
- Two (or more) radically different types of land uses or expected pollutant categories
- Optimal use of land area and resources to best improve storm water quality

This practice may potentially provide significant reductions in pollutants for which the primary treatment BMP does not target, depending on the combinations involved.

Approach

Storm water treatment BMPs may be placed either in series or in parallel. In essence, parallel storm water treatment BMPs, have different sub-basins and act independently of each other. Storm water treatment BMPs in series may be labeled as primary, secondary, or tertiary to reflect the order in which they occur.

Storm water treatment BMPs in series should be placed in order to remove pollutants that may interfere with the functioning of a downstream BMP. For instance, large volumes of sediment should be removed from storm water prior to entering an oil-water separator. An oil-water separator may be necessary upstream from wetlands in order to control storm water runoff from parking lots.

Figure ST-09-1 shows a typical arrangement for placing storm water treatment BMPs with compatible land uses, typically along the edge of a property or project site. Aesthetics for these permanent structures help to maintain property values (residential), provide an attractive landscape for customers

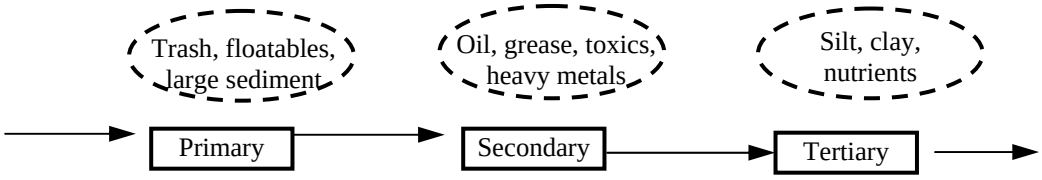

and employees (industrial, commercial), and improve the overall quality of the environment and recreational facilities.

Typical Storm Water Treatment BMPs — In Series

Applications

The following combinations of multiple storm water treatment BMPs are briefly discussed using the following terms to denote the order of treatment: (1) primary or upstream, (2) secondary, and (3) tertiary or downstream. This list is intended to be suggestive and should be adapted for specific sites based upon land use, land surfaces, slopes and grades, available space, pollution potential, etc.

A

(1) Baffle box, manhole, gate, or weir (with high-flow bypass)
(2) Oil-water separator, filter swale, media filtration, water quality manhole/insert, wetlands

This is preferred for all storm water quality systems to ensure that flows in excess of the design flow do not damage the treatment system or resuspend the previously collected pollutants. A baffle box or manhole should ideally capture trash and large sediment particles to assist operations of the downstream BMP.

B

(1) Wet detention basin or dry detention basin
(2) Media filtration or oil-water separator
(3) Wetlands

It is desirable to protect wetlands (either natural or constructed) from excessive flow volumes and from pollutants that typically run off from parking lots, streets and highways, industrial or commercial properties, etc. Media filters will clog less frequently. Reduced maintenance costs for an oil-water separator.

C

(1) Filter strips and swales, forebay, baffle box, or manhole
(2) Wet detention basin or dry detention basin

Treatment measures in front of a detention basin will collect floatable debris and coarse sediment (to reduce frequency and difficulty of detention basin cleanout).

D

(1) Oil-water separator, media filtration
(2) Wetlands, filter strips, swales, infiltration trench or basin

Pretreatment of storm water runoff is desirable for sensitive vegetation systems wherever storm water runoff comes from streets and highways, parking lots, industrial or commercial properties, etc.

Overall pollutant removal goals are discussed in Chapter 4 of the BMP Manual. The primary measurable pollutant is total suspended sediments (TSS), and the desirable goal is to achieve 75% removal based on the equivalent definition of the first flush treatment. Most other pollutants will be removed proportionately to the TSS removal rate.

Maintenance

Maintenance for a system of multiple storm water treatment BMPs should be conducted on a regular basis. Examine the system as a whole and note findings for future use. Coordinate cleanouts and repairs to occur during dry weather. In general, the upstream BMP is more likely to need maintenance and repair, since it is selected to reduce the loading and potential damage to the downstream BMP.

Limitations

Available space may be limited for some storm water treatment BMPs. Configuration may be difficult to accomplish. Storm water detention is required by Memphis and Shelby County for most construction and redevelopment project sites, so that the largest portion of space is defined by hydrological requirements that are non-negotiable.

References

31 (see BMP Manual Chapter 10 for list)

Notes:

1. This figure illustrates how storm water treatment BMPs may be incorporated into recreational areas, parking areas, landscaping, and outlying property areas near buffer zones and setbacks.
2. Reduce outlet velocities on all culverts and storm drains. Provide outlet protection where necessary.
3. Media filtration, storm water quality inlets, and oil-water separators are highly desirable to reduce oils, grease, heavy metals, and other pollutants associated with automobiles.
4. The wet detention basin shown has an aesthetically pleasing fountain, which also provides aeration for fish and aquatic life.

ST-01	Dry Detention Basin
ST-02	Wet Detention Basin
ST-03	Infiltration Systems and Methods
ST-04	Constructed Wetlands
ST-05	Filter Strips and Swales
ST-06	Water Quality Inlets and Media Filtration Systems
ST-07	Oil-Water Separator
ST-08	Underground Detention

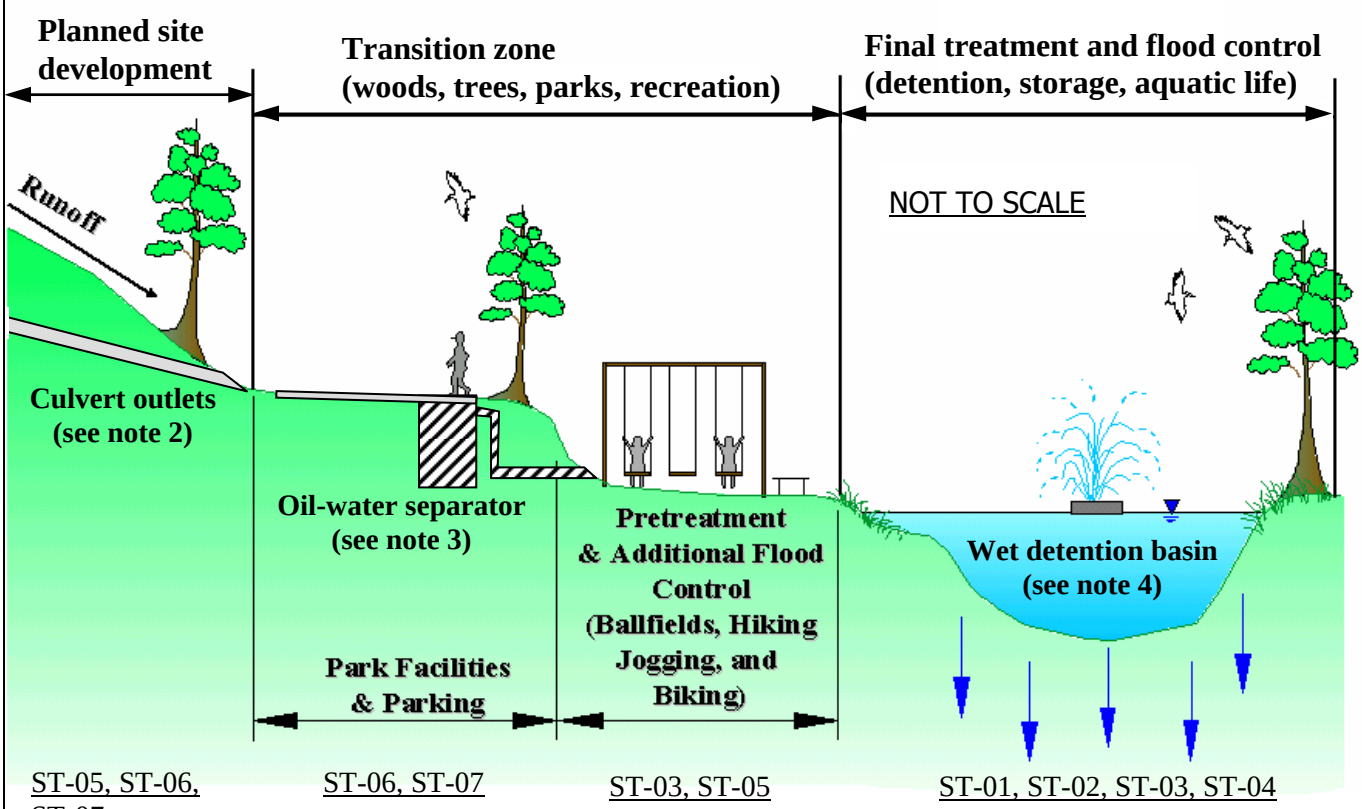

Figure ST-09-1
Multiple Systems for Storm Water Treatment BMPs