REQUEST FOR BID

FOR

BIG ORANGE LIFT STATION REHABILITATION PROJECT

Addendum No. 3 to

RFB No. 182263.70.0100

January 27, 2014

The following information encompasses Addendum No. 3 for the above referenced RFB. Bidders shall fully consider and acknowledge this Addendum in the preparation and submittal of its formal Bid. Failure to do so may result in the rejection of the Bid.

Section 1 – Responses to Bidder Questions

Section 2 – Technical Clarifications to the Scope of Work (57 pages) attached

All other conditions and requirements remain unchanged.

Section 1 - Responses to Bidder Questions

Question #1:
At what point inside the valve vault does the header go from HDPE to DIP? Or is the entire header HDPE?

Response:
Just inside the valve vault wall, the plans call for two HDPE flange adapters with SS backing rings just before the DI header leaves the vault. The HDPE penetrations through the vault wall are done with link seals. Reference sheet W1.03.

Question #2:
It was mentioned we are bypassing an 18” line and a 42” line. The way I understand it is the existing bypass pump, which will be replaced, is currently bypassing the 18” line and we have to set up a second bypass system for the 42” line. Please clarify.

Response:
The City’s existing bypass arrangement will be replaced by the contractor, and the current method of bypassing in which the 42” line backflows to the upstream 18” siphon manhole will no longer be an option (given that the wetwell will have to be isolated). So the new bypass arrangement will require bypass pumping from both the 18” and 42” lines in either a separate or combined pumping scenario. In either scenario, suction hoses would need to pull flow from both and connect to the existing 14” force main.

Question #3:
Can you provide estimated flow rates from each line, normal and peak?

Response:
It is the City's standard policy to require bypass pump systems to design for full pipe capacity of all incoming lines to be bypassed. It is current understanding that the 10" force main is full of debris and not usable. The contractor will need to connect to the 14" diameter force main. The existing lift station has two 750 gallons per minute (gpm) capacity pumps and two 2,100 gpm capacity pumps. The contractor should assume for the purposes of bidding that normal flow is between 750 -1500 gpm and that peak flow is 3,500 gpm, and should design a bypass pump system that can meet these hydraulic conditions through the 14" diameter force main.

Question #4:
When I at the site I could not find a manhole for access to the 42" line, is it on the other side of the fence?

Response:
Based on the original design plans, the nearest manhole on the existing 42-inch influent line is approximately 120 LF north of the wet well. Also, the existing maintenance easement on the 42" line is 30 feet in width. The station and the manhole to the north are on the same property (according to assessor's office); reference Parcel is D0215-00657. If contractor needs more working space beyond the existing maintenance easement, contractor shall obtain same at his expense.

Question #5:
There are two bypass connections, one currently being used by the existing bypass. Is the second one the point at which we will connect the second bypass to the force main?

Response:
For practical purposes, there is one force main to connect to the 14" diameter force main, as the 10" is full of debris and is not usable. The City intends on shutting down their bypass pumping operation and the contractor will take over. There will not be simultaneous City/contractor bypass pumping operations.

Question #6:
Is the force main pressurized? If so, what is the pressure at the connection point?

Response:
The 14-inch diameter force main is not pressurized downstream of the Big Orange Lift Station via connections to any other pump systems. The 10-inch diameter force main, which is not usable at Big Orange Lift Station currently due to being full of debris, has several downstream pump system connections which pressurize it above and beyond any pressures that would be achieved via the Big Orange Lift Station.

Question #7:
What is the distance from grade to the water level?

Response:
According to the original design drawings, the top of the existing wet well is 291.50 +/- with the invert of the 18-inch from the east at 271.69 +/-. The invert of the 42-inch should be 269.50 +/-.

Question #8:
Is there a local contractor preference on this project?

Response:
Yes, there is a local contractor preference of 5%.

Question #9:
On plan page 2 of 7, Demolition Plan Note #6 states, weight tickets verifying quantity of debris will be required for payment for debris removal. Since this is a lump sum Bid will weight tickets be required?

Response:
The contractor shall include in his bid the removal and proper disposal of up to 115 tons of debris. Amounts over this base amount shall be paid for based upon certified weigh tickets at the point of disposal. In order to properly account for ALL sand and debris removed from this wet well it is expected that the contractor shall provide certified weigh tickets for all materials disposed of. Those amounts exceeding 115 tons will be paid for at the unit price shown on the bid schedule. No separate payment for sand and debris removal below 115 tons will be made. Payment up to that amount should be included in the contractor's price for Wet Well Restoration.

Question #10:
If weight tickets are required will you allow a gallons converted to tons measurement for payment of debris removal?

Response:
Reference Question#9 above.

Question #11:
Reference Plan Sheet No. E1.01, Note No. 2: This note requires that circuits leaving the existing pump station shall comply with applicable sections of the NEC pertaining to hazardous locations. The current installation has junction boxes with power and control cords in open air and running through a plastic sleeve into the wet well. This installation allows sewer gases to escape into the atmosphere and does not provide an adequate cover (conduit) for the wet well cables . Should a conduit and a seal be added between the wet well and the junction box when the well pumps are reconnected after testing?

Response:
Reference Question #12 below.

Question #12:
Reference Plan Sheet E1.01, Wiring Handhole Detail: Please provide a specification for the underground handhole.

Response:
The following clarification and/or amendments to the plans and specifications relative to the re-routing of the underground electric power and control circuits shall be made. All conduit and fittings utilized, both above ground and below ground, shall be PVC coated rigid steel conduit. The contractor shall intercept each existing power and control conduit as close to the existing electrical building as practical and reroute same as indicated on Sheet E1.01. The contractor shall include in his bid the replacement of each of the four wet well mounted electrical junction boxes with NEMA 4X boxes of equivalent size as the existing. These boxes shall be fabricated of 304 SS and shall be attached to the existing wet well with appropriately sized stainless steel unistrut assemblies. The contractor shall also include in his bid the installation of a short run of PVC coated steel elbow and nipple large enough to accommodate the installation of the existing submersible pump control/power cable. Also, when this submersible pump control/power cable passes through the existing PVC sleeved opening through the top slab of the wet well the contractor shall seal this opening with appropriate non-hardening duct seal. Also to be included in the contractor's bid is the provision and installation of new control and power wiring from the existing termination points in the electrical building to the new wet well mounted junction boxes. Size, type and number of wires shall be as existing. No re-use of wiring as noted on Sheet E1.01, Note 4, shall be allowed.

Question #13:
Reference Plan Sheet E1.01, Note No. 4: The existing wiring is to be removed from the existing conduit and reinstalled when the new conduits and handholes are complete. Once the conduit is rerouted the existing wiring will not be long enough to reach the existing terminals. Should all new wiring be furnished between the existing motor control building and the existing pump station?

Response:
Reference Question #12 above.

Question #14:
Will the Wet Well and Valve Vault piping need to be coated? If so, what type of coating?

Response:
Reference Section 2 attachment Question 3 page 1 of 57.

Question #15:
What are the anticipated flow rates for the incoming 18" and 42" lines?

Response:
Reference Question#3 above.

Question #16:
Can the contractor use the existing power to run the bypass pumping system?

Response:
The contractor may NOT utilize the City's existing power feed to this existing pump station without first coordinating with MLGW for the provision of a separate electric meter. All utility costs associated with the contractor's bypass pumping system will be paid by the contractor.

Question #17:
Bid item 1300 and Bid Item 1600 both refer to the Payment Bond. Please clarify the intent of these two items.

Response:
Please refer to Article 00160.4 Bid Guarantee Requirements, Item c.
(c) If bid is accepted, bidder will execute required 100% Performance/Payment Bond and will obtain required insurance coverage within ten (10) calendar days after receipt of Subcontract.

Question #18:
The Electrical Specifications require that underground conduits be schedule 40 PVC. Drawing E1.01 notes Rigid Steel. Please clarify.

Response:
Reference Section 2 attachment Question 3 page 1 of 57.

Question #19:
Where is the point of rework of the existing conduits? From MCC Building LB's to Wet Well LB's?

Response:
Reference Section 2 attachment Question 3 page 1 of 57.

Question #20:
Are we to replace all (4) of the motor termination boxes? If so, the specifications only address NEMA 3R.

Response:
Reference Section 2 attachment Question 3 page 1 of 57.

Question #21:
The Electrical Specifications require that exposed conduits be GRC. If we are to replace existing conduits at the wet well, would this specification need to change to PVC Coated GRC?

Response:
Reference Section 2 attachment Question 3 page 1 of 57.

Question #22:
The specifications require galvanized steel supports. Do the specifications need to address the corrosive effects of the site?

Response:
Reference Question #12 above.

Section 2 - Technical Clarifications to the Scope of Work (57 pages)

The following are additions and/or clarifications relative to the technical specification and construction details for the Big Orange Lift Station Rehabilitation project.

1. Referring to Sheet W1.03, Valve Vault Details, the contractor should note that the discharge piping transitions from DIP to HDPE just prior to exiting the south wall of the valve vault. As shown on Detail 2, this transition occurs just downstream of the 14-inch knife gate valve and downstream of the 10-inch pressure isolation ring.
2. Relative to the bypass pumping requirements, the following clarifications/information is offered for the contractor's consideration in the design of his bypass pumping system. Currently, the City is utilizing an 8-inch Thompson pump that is capable of delivering up to 3,200 gallons per minute (GPM) although lower flows are more typical during dry weather conditions. A copy of the pump curve is attached for information. Additionally, the City is utilizing the existing wet well and a portion of the incoming 42-inch gravity line for storage during the on-going bypass pumping operations with this pump. To this point, this existing bypass pump system has handled the incoming flows to their knowledge. Also, there are several smaller lift stations down stream of this existing pump station that are connected directly to the existing 10-inch force main. There are no other lift stations connected to the 14-inch force main downstream of the pump station. The bypass pumping system that the contractor shall install will be expected to handle all incoming flows and be positioned such that flow will be intercepted from both the 42-inch gravity line from the north and the 18-inch gravity line from the east without utilizing the existing wet well. Therefore it would seem likely that the contractor will utilize at least two separate bypass pumping systems; one for the 42-inch line and the other for the 18-inch line. The contractor shall also design his bypass pumping system so that operationally the level of sewage in the 42-inch gravity line does not vary significantly from the current levels seen due to the on-going City bypass pumping operations. Both of these systems will have to utilize the existing 14-inch force main. The contractor may NOT utilize the existing 10-inch force main for any bypass pumping operations. Additionally, the contractor may NOT utilize the City's existing power feed to this existing pump station without first coordinating with MLGW for the provision of a separate electric meter. All utility costs associated with the contractor's bypass pumping system will be paid by the contractor. And finally, the bypass pumping system should be design such that a velocity in the existing 14-inch force main does not exceed 8 feet per second.
3. The following clarification and/or amendments to the plans and specifications relative to the re-routing of the underground electric power and control circuits shall be made. All conduit and fittings utilized, both above ground and below ground, shall be PVC coated rigid steel conduit. The contractor shall intercept each existing power and control conduit as close to the existing electrical building as practical and reroute same as indicated on Sheet E1.01. The contractor shall include in his bid the replacement of each of the four wet well

mounted electrical junction boxes with NEMA 4X boxes of equivalent size as the existing. These boxes shall be fabricated of 304 SS and shall be attached to the existing wet well with appropriately sized stainless steel unistrut assemblies. The contractor shall also include in his bid the installation of a short run of PVC coated steel elbow and nipple large enough to accommodate the installation of the existing submersible pump control/power cable. Also, when this submersible pump control/power cable passes through the existing PVC sleeved opening through the top slab of the wet well the contractor shall seal this opening with appropriate non-hardening duct seal. Also to be included in the contractor's bid is the provision and installation of new control and power wiring from the existing termination points in the electrical building to the new wet well mounted junction boxes. Size, type and number of wires shall be as existing. No re-use of wiring as noted on Sheet E1.01, Note 4, shall be allowed.

4. The contractor shall include in his bid the removal and proper disposal of up to 115 TONS of sand and debris. Amounts over this base amount shall be paid for based upon certified weigh tickets at the point of disposal. In order to properly account for ALL sand and debris removed from this wet well it is expected that the contractor shall provide certified weigh tickets for all materials disposed of. Those amounts exceeding 115 TONS will be paid for at the unit price shown on the bid schedule. No separate payment for sand and debris removal below 115 TONS will be made. Payment up to that amount should be included in the contractor's price for Wet Well Restoration.

The following are additions and/or clarifications relative to the technical specification and construction details for the Big Orange Lift Station Rehabilitation project.

1. On Sheet W1.01 of the Drawings, reference is made that the existing pumps be removed and tested for functionality. It is the intent of this statement that the contractor remove and store these existing pumps during construction and reinstall them after the wet well rehabilitation is complete and the new discharge connections, guide rails and discharge piping is installed. Prior to their re-installation, it is expected that the contractor check each pump for correct rotation.
2. On Sheet W1.02 reference is made to the removal and replacement of the existing pump discharge connections and guide rails. The Existing pumps are Xylem-Flygt units. The contractor shall coordinate the purchase and installation of new pump discharge connections for these units from the original equipment manufacturer.
3. The new pump guide rails shall be 3-inch Schedule 80 Type 304 Stainless Steel.
4. The details provided on Sheet W1.02 for the Steel Stabilization Angle Nos. 1 and 2 shall be replaced with new fabrication details as provided herein.
5. All stainless steel angles, plates, nuts, bolts, threaded rods, etc. shall be Grade 304/304L.
6. The contractor shall include in his demolition scope the removal of the four existing pump discharge connections, existing grout under these connections, pump guide rails, discharge piping, check valves and fittings within the existing wet well.
7. On Sheet W1.03, the Valve Vault Detail refers the contractor to the Pipe Support Detail on Sheet W1.04. This detail is actually found on Sheet W1.05.
8. On Sheet W1.03, reference is made to the provision and installation of new 2-inch air release valves. The 2-inch valves shall be Stainless Steel Wastewater Combination Air Valves as manufactured by Val-Matic Valve and Manufacturing Corporation, their Model No. 802AS. These valves shall be supplied with a 2-inch stainless steel body isolation ball valve fitted to the 8" x 6" tapped tee with stainless steel threaded nipples. These 2-inch valves shall only be provided for the two discharge lines on the 750 GPM pumps. The valves to be provided for the two 2,100 GPM pumps shall be 4-inch Stainless Steel Wastewater Combination Valves as manufactured by Val-Matic Valve and Manufacturing Corporation, their Model No. 804AS. These valves shall be supplied with a 4-inch stainless steel body isolation ball valve fitted to the 10" x 6" tapped tee with stainless steel threaded nipples. A cut sheet for these combination valves is provided herein.
9. The down-turned 2" x 4" keyway shown on the Bottom Slab Detail and Keyway Detail on Sheet W1.05 shall be revised to show this keyway in an upturned orientation to prevent possible interference between the water stop and top layer of slab reinforcement. No revised detail shall be provided.
10. In Section 02722, Paragraph 2.01(A)3, it is noted that <u>all</u> ductile iron piping is to be supplied with an exterior bitumastic coating. This exterior bitumastic

coating is only to be supplied on that portion of ductile iron pipe and fittings that are buried between the existing wet well and new valve vault. All other ductile iron pipe and fittings shall be provided with an exterior paint system as specified in Section 09900, PAINTING AND PROTECTIVE COATINGS, supplied with this Addendum No. 3.

11. In Section 02722, Paragraphs 2.01(D)(E) call for various internal lining systems that may be utilized for the interior coating of all ductile iron pipe and fittings used on this project. The contractor shall DELETE Paragraph 2.01(D). The ONLY internal lining system for ductile iron pipe and fittings is Protecto 401 as specified in Paragraph 2.01(E).
12. In Section 02722, Paragraph 3.04(A)1, the minimum test pressure shall be a minimum of 125 psi.
13. Note that the Owner will provide all quality control testing for soils and concrete materials. Re-tests as a result in materials that failed initial testing will be the responsibility of the contractor.
14. Stainless Steel sheet, strip, plate and flat bars shall meet ASTM A 666, Type 304/304L; Stainless Steel bars and shapes shall meet ASTM 276, Type 304/304L; Stainless Steel bolts, nuts and washers shall meet ASTM F593, AISI Type 304.
15. The aluminum access frames and covers specified in Section 10000 shall be provided with a gutter-type frame that will channel collected water to a 1-1/2 inch threaded drainage coupling. The contractor shall coordinate the location of these couplings in each assembly and pipe the collected water to the nearest floor drain in the valve vault with 1-1/2 inch diameter SCH 80 PVC pipe and fittings.
16. In Section 16010, reference to Section 16070 is made. There is NO Section 16070 in these technical specifications.
17. In Section 16130, reference is made to Section 02300, EARTHWORK. There is no Section 02300 in these technical specifications. Reference should be to Section 02221, TRENCHING, BACKFILLING AND COMPACTION.
18. The contractor shall add the attached Section 16075, ELECTRICAL IDENTIFICATION to these technical specifications. A copy of this section is included herein.

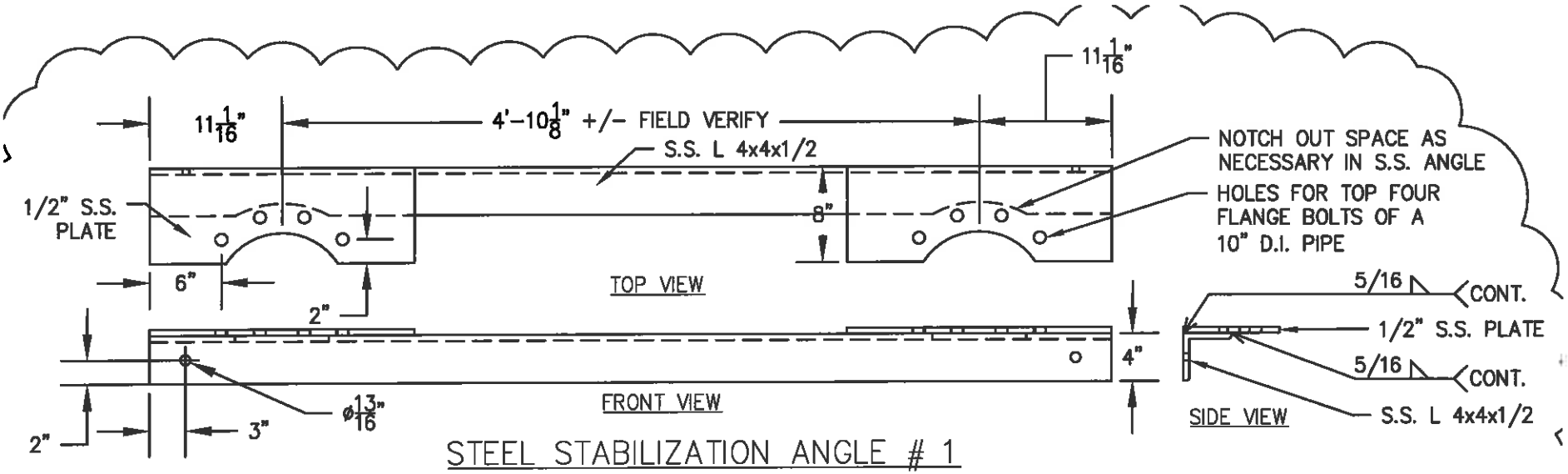

STEEL STABILIZATION ANGLE # 1

N.T.S.

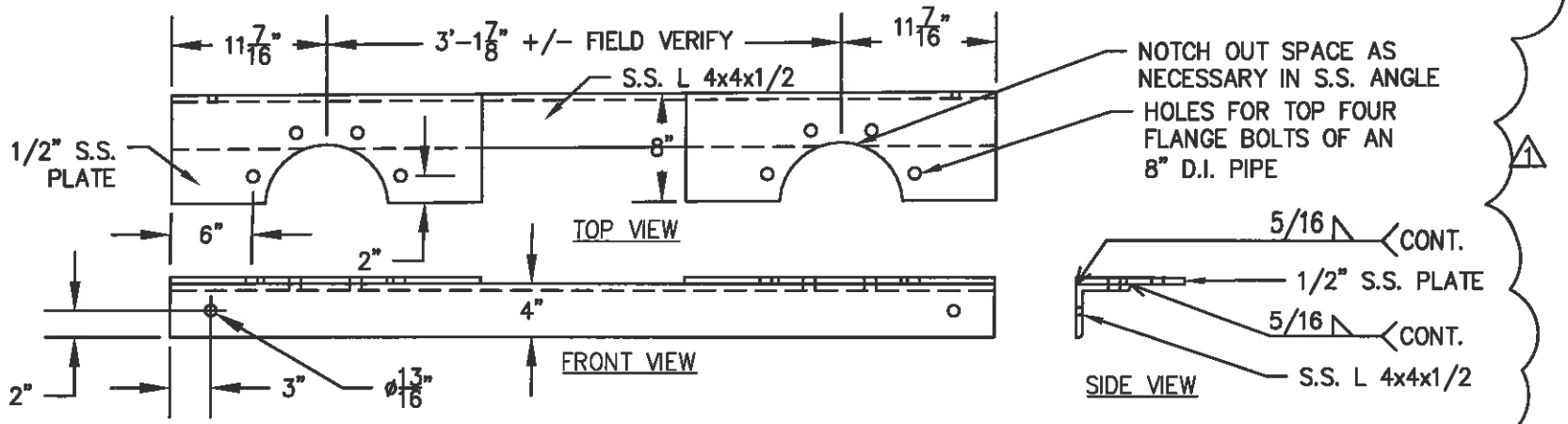

STEEL STABILIZATION ANGLE # 2

N.T.S.

NOTE: ALL STAINLESS STEEL TO BE TYPE 304/304L.

ADDENDUM #3

SHEET 1 OF 2

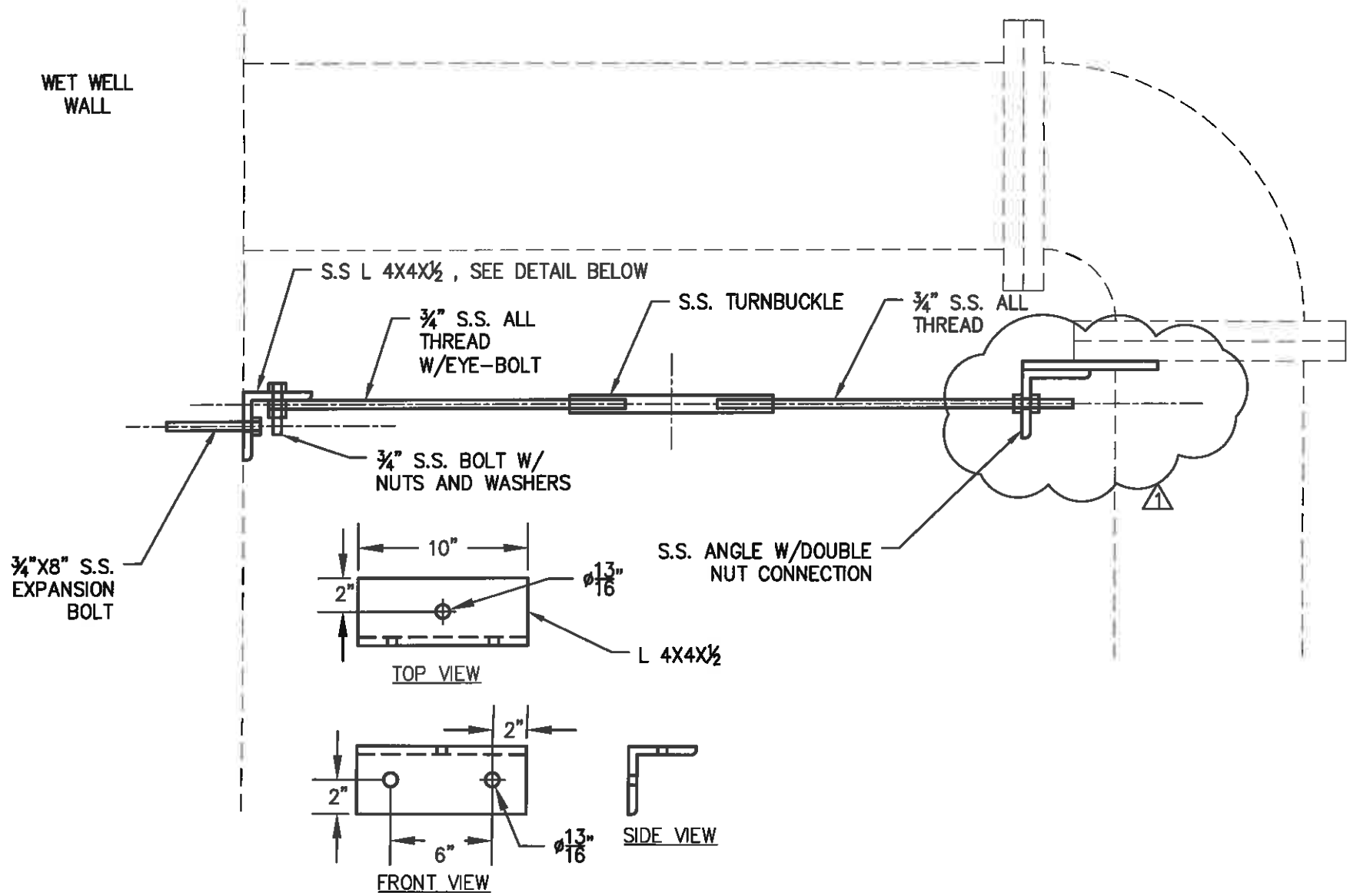

WALL ANCHOR DETAIL

N.T.S.

NOTE: ALL STAINLESS STEEL TO BE TYPE 304/304L.

ADDENDUM #3

SHEET 2 OF 2

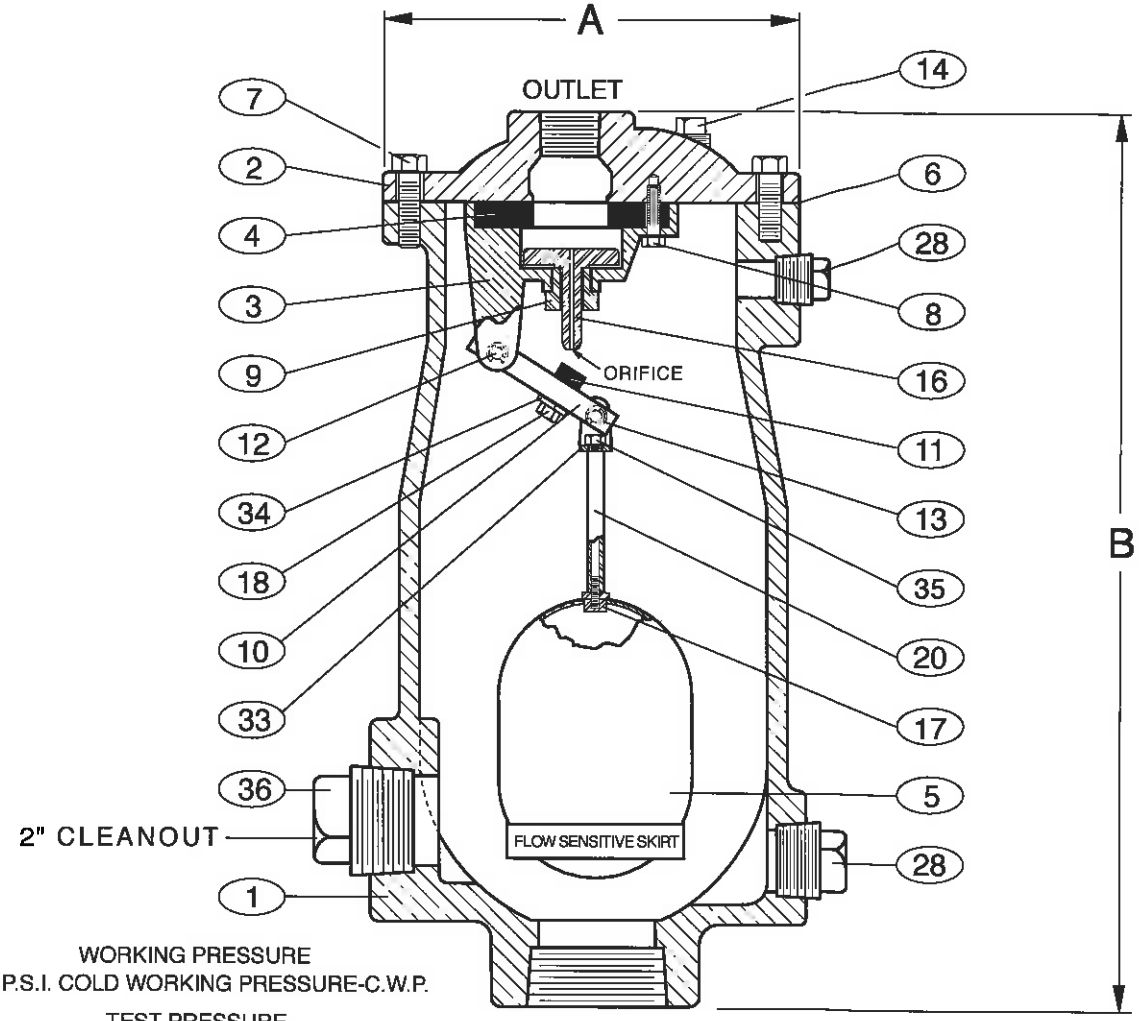

WORKING PRESSURE
150 P.S.I. COLD WORKING PRESSURE-C.W.P.

TEST PRESSURE
1.5 TIMES COLD WORKING PRESSURE-C.W.P.

VALVE SIZE	MODEL NO.	A	B	ORIFICE SIZE	INLET	OUTLET
[redacted]						
2	802AS	9.50	17.88	9/64"	2"	2"
[redacted]						
4	804AS	11.00	23.25	11/64"	4"	4"

1 BODY
2 COVER
3 BAFFLE
4 SEAT
5 FLOAT
6 GASKET
7 COVER BOLT
8 RETAINING SCREW
9 BUSHING (2", 3" & 4")
10 FLOAT ARM
11 ORIFICE BUTTON
12 PIVOT PIN
13 RETAINING RING
14 PIPE PLUG
16 PLUG
17 FLOAT RETAINER
18 LOCK NUT
20 GUIDE SHAFT
28 PIPE PLUG
33 CLEVIS
34 LOCK WASHER
35 GUIDE SHAFT RETAINER
36 PIPE PLUG

SEE DRAWING NO. VM-801AS-M FOR STANDARD MATERIALS OF CONSTRUCTION.

Revised 9-5-12

STAINLESS STEEL WASTEWATER COMBINATION AIR VALVE

DATE 11-5-09

VAL-MATIC® VALVE AND MANUFACTURING CORP.

DRWG. NO. VM-801AS

STAINLESS STEEL WASTEWATER COMBINATION AIR VALVE

SERIES NO. 801AS

STANDARD MATERIALS OF CONSTRUCTION

PART NO.	PART NAME	MATERIAL
1	BODY	STAINLESS STEEL ASTM A351, GRADE CF8M
2	COVER	STAINLESS STEEL ASTM A351, GRADE CF8M
3	BAFFLE	STAINLESS STEEL ASTM A351, GRADE CF8M
4	SEAT	BUNA-N
5	FLOAT	STAINLESS STEEL T316, ASTM A240
6	GASKET	COMPRESSED NON-ASBESTOS FIBER
7	COVER BOLT	STAINLESS STEEL T316, ASTM F593
8	RETAINING SCREW	STAINLESS STEEL T316, ASTM F593
9	GUIDE BUSHING (2", 3" & 4")	STAINLESS STEEL T316, ASTM A582
10	FLOAT ARM	STAINLESS STEEL T316, ASTM A582
11	ORIFICE BUTTON	STAINLESS STEEL & BUNA-N
12	PIVOT PIN	STAINLESS STEEL T316, ASTM A276
13	RETAINING RING	STAINLESS STEEL PH 15-7 MO
14	PIPE PLUG	STAINLESS STEEL T316
16	PLUG	STAINLESS STEEL T316, ASTM A276
17	FLOAT RETAINER	STAINLESS STEEL T316, ASTM F880
18	LOCK NUT	STAINLESS STEEL T316, ASTM A594
20	GUIDE SHAFT (1", 2" & 4")	STAINLESS STEEL T316, ASTM A582
28	PIPE PLUG	STAINLESS STEEL T316
33	CLEVIS	STAINLESS STEEL T316, ASTM A240
34	LOCK WASHER	STAINLESS STEEL T316, ASTM A240
35	GUIDE SHAFT RETAINER	STAINLESS STEEL T316, ASTM A593
36	PIPE PLUG	STAINLESS STEEL T316

NOTE: ALL SPECIFICATIONS AS LAST REVISED.

Revised 10-3-12

MATERIALS OF CONSTRUCTION	DATE 11/5/09
VAL-MATIC® VALVE AND MANUFACTURING CORP.	DRWG. NO. VM-801AS-M

SECTION 09900

PAINTING AND PROTECTIVE COATINGS

PART 1 - GENERAL

1.1 WORK INCLUDED

A. The intention of these Specifications is for exposed, buried, and submerged metal and piping, and aluminum and dissimilar metals, to be protective painted, whether specifically mentioned or not, except as specified otherwise. Prime coat structural steel surfaces. Exterior and interior concrete surfaces of new valve vault will be protective painted as specified herein.

1.2 REFERENCES

A. The following is a list of standards which may be referenced in this section:

1. American National Standards Institute (ANSI):
   a. Standard Colors for Color Identification and Coding.
   b. A13.1, Scheme for the Identification of Piping Systems.
2. American Water Works Association (AWWA):
   a. C203, Coal-Tar Protective Coatings and Linings for Steel Water Pipelines- Enamel and Tape-Hot-Applied.
   b. C210, Liquid Epoxy Coating System for the Interior and Exterior of Steel Water Pipelines.
   c. C214, Tape Coating Systems for the Exterior of Steel Water Pipelines.
3. NSF International (NSF): 61 Drinking Water System Components-Health Effects.
4. National Association of Corrosion Engineers (NACE): Manual for Painter Safety.
5. Occupational Safety and Health Act (OSHA).
6. Steel Structures Painting Council (SSPC):
   a. QP1, Standard Procedure for Evaluating Qualifications of Painting Contractors.
   b. QP2, Standard Procedure for Evaluating the Qualifications of Painting Contractors to Remove Hazardous Paint.
   c. SP 1, Surface Preparation Specification No. 1, Solvent Cleaning.
   d. SP 2, Hand Tool Cleaning.
   e. SP 3, Power Tool Cleaning.
   f. SP 5, White Metal Blast Cleaning.
   g. SP 6, Commercial Blast Cleaning.

h. SP 7, Brush-Off Blast Cleaning.
i. SP 8, Pickling.
j. SP 10, Near-White Blast Cleaning.
k. SP 11-T, Power Tool Cleaning to Bare Metal.
l. SP 13, Concrete Preparation
m. Guide No. 3, PA, Guide to Safety in Painting Applications.

1.3 DEFINITIONS

A. Terms used in this section:

1. Coverage: Total minimum dry film thickness in mils, or square feet per gallon.
2. FRP: Fiberglass Reinforced Plastic.
3. HCl: Hydrochloric Acid.
4. MDFT: Minimum Dry Film Thickness.
5. MDFTPC: Minimum Dry Film Thickness per Coat.
6. Mil: Thousandth of an inch.
7. PSDS: Paint System Data Sheet.
8. SFPG: Square Feet per Gallon.
9. SFPGPC: Square Feet per Gallon per Coat.
10. SP: Surface Preparation.

1.4 SUBMITTALS

A. Shop Drawings:

1. Data Sheets:
   a. For each paint system, furnish a Paint System Data Sheet (PSDS), the Manufacturer's Technical Data Sheets, and paint colors available (where applicable) for each product used in the paint system.
   b. Submit required information on a system-by-system basis.
   c. Furnish copies of paint system submittals to the coating applicator.
   d. Indiscriminate submittal of Manufacturer's literature only is not acceptable.

B. Quality Control Submittals:

1. Applicator's Qualification: List of references substantiating experience.
2. Factory Applied Coatings:Manufacturer's certification stating factory applied coating system meets or exceeds requirements specified.
3. If the Manufacturer of finish coating differs from that of shop primer, provide both Manufacturers' written confirmation that materials are compatible.

4. Manufacturer's written instructions and special details for applying each type of paint.
5. Manufacturers' Certification of Proper Installation.

C. Contract Closeout Submittals: Warranty.

1.5 QUALITY ASSURANCE

A. Qualifications:

1. Applicator: Minimum 5 years experience in application of specified products.

B. Regulatory Requirements:

1. Meet federal, state, and local requirements limiting the emission of volatile organic compounds.
2. Perform surface preparation and painting in accordance with recommendations of the following:
   a. Paint Manufacturer's instructions.
   b. SSPC-PA Guide No. 3, Guide to Safety in Paint Applications.
   c. Federal, state, and local agencies having jurisdiction.

C. Mockup:

1. Before proceeding with work under this section, finish one complete space or item of each color scheme required showing selected colors, finish texture, materials, quality of work, and special details.
2. After approval, sample spaces or items shall serve as a standard for similar work throughout the Project.

1.6 DELIVERY, STORAGE AND HANDLING

A. Store products in a protected area that is heated or cooled to maintain temperatures within the range recommended by paint Manufacturer.

B. Shipping:

1. Where pre-coated items are to be shipped to the site, protect coating from damage. Batten coated items to prevent abrasion.
2. Use nonmetallic or padded slings and straps in handling.

1.7 ENVIRONMENTAL REQUIREMENTS

A. Do not apply paint in temperatures outside of Manufacturer's recommended maximum or minimum allowable, or in dust, smoke-laden atmosphere, damp or humid weather.

B. Do not perform abrasive blast cleaning whenever relative humidity exceeds 85%, or whenever surface temperature is less than 5° F above dew point of ambient air.

1.8 10-YEAR LIMITED WARRANTY

A. The coatings manufacturer shall warranty the entire project to include any and all aspects of the surface preparation, base material installation and protective coating applications for a period of TEN (10) YEARS from the date of acceptance by the City of Memphis. The warranty shall make no distinction between the installation practices and material performance and shall not be prorated with respect to elapsed time for the entire warranty period. Manufacturer shall, within a reasonable period of time after receipt of notice thereof by the City of Memphis [period not to exceed sixty (60) calendar days], repair defects in materials or workmanship during said TEN (10) YEAR period, and any damage to other work caused by such defects or repairing of same at his own expense and without cost to the City of Memphis.

PART 2 - PRODUCTS

2.1 PAINT AND COATINGS MANUFACTURERS

A. Nationally recognized Manufacturers of paints and protective coatings who are regularly engaged in the production of such materials for essentially identical service conditions.

B. Protective Coatings Manufacturers:

1. Tnemec Coatings
2. Sherwin Williams
3. Or Equal

C. Cement Waterproofing and Finishing Manufacturers:

1. "Thoro Products" as manufactured by BASF
2. Or equal

D. No request for substitution will be considered which decreases the film thickness designated and/or the number of coats to be applied, or which offers a change from the generic type of coating specified. Any request for

substitution shall contain the full name of each product, descriptive literature, directions for use, generic type, nonvolatile content by volume, and a list of at least ten (10) applications where each of the coatings has been used on new construction and has rendered satisfactory service for at least three (3) years. Submitted paint system shall be used throughout entire project.

2.2 ABRASIVE MATERIALS

A. Select abrasive type and size to produce surface profile that meets coating Manufacturer's recommendations for specific primer and coating system to be applied.

2.3 PAINT MATERIALS

A. General:

1. Manufacturer's highest quality products suitable for intended service.
2. Compatibility: Only compatible materials from a single Manufacturer shall be used in the work. Particular attention shall be directed to compatibility of primers and finish coats.
3. Thinners, Cleaners, Driers, and other additives: As recommended by Manufacturer of coating material.

B. Protective Coating Products:

Product	Definition
Tar Stop	Not approved for this project.
Anticorrosive Polyamide Epoxy Primer	Polyamide, anticorrosive, converted epoxy primer containing rust-inhibitive pigments
Coal-Tar Epoxy	Amine or phenolic epoxy type: 70% volume solids minimum, suitable for immersion service
Organic Zinc Rich Primer	Converted epoxy, epoxy/phenolic or urethane type, minimum 10 pounds metallic zinc content per gallon
Rust Inhibitive Primer	Single Package steel primers with anticorrosive pigment loading
Wash Primer	Vinyl butyral acid
Epoxy Nonskid (Aggregated)	Polyamide or amine converted epoxies aggregated; aggregate may be packaged separately
High Build Epoxy	Polyamide or polyamidoamine epoxy, minimum 69% volume solids, capability of 4 to 8 Mil MDFT per coat
Modified Aromatic Polyurethane Primer	Single component, moisture-cured resin, containing micaceous iron oxide and zinc, minimum volume solids 59%, capability of 2.5 to 3.5 Mil MDFT per coat
Hydrophobic Aromatic Polyurethane	Moisture-cured, hydrocarbon-modified coating, minimum 69% volume solids, capability of 5.0 to 10.0 Mil MDFTPC.

Product	Definition
Aliphatic Acrylic Polyurethane	High build quality resistant to abrasion, wet conditions, corrosive fumes, and exterior weathering, minimum 64% volume solids, capability of 2.0 to 5.0 Mil MDFTPC.
Epoxy Modified Cementitious Mortar	100% solids trowel grade high-performance, aggregate reinforced material for surfacing, patching and filling voids and bugholes in concrete substrates, capability of 1/16" to1/4" MDFT per lift
Modified Polyamine Epoxy	Abrasion-Resistant lining specifically designed for wastewater immersion and fume environments; provides low permeation to hydrogen sulfide gas, protects against MIC and provides chemical resistance to severe wastewater environments; 100% solids and capability of 15 to 40 Mil MDFT in one or two coats on steel surfaces.
Fiber-Reinforced Modified Polyamine Epoxy	Abrasion-Resistant lining specifically designed for wastewater immersion and fume environments; provides high resistance to hydrogen sulfide gas, protects against MIC and provides chemical resistance to severe wastewater environments; fiber-reinforcement for superior physical strength and higher film build; 100% solids and capability of 50 to 125 Mil MDFTPC.

C. Cement Waterproofing and Finishing Products: See Application Schedule Specified herein.

2.4 MIXING

A. Multiple-Component Coatings:

1. Prepare using the contents of the container for each component as packaged by paint Manufacturer.
2. No partial batches will be permitted.
3. Do not use multiple-component coatings that have been mixed beyond their pot life.
4. Furnish small quantity kits for touchup painting and for painting other small areas.
5. Mix only components specified and furnished by paint Manufacturer.
6. Do not intermix additional components for reasons of color or otherwise, even within the same generic type of coating.

B. Colors: Formulate paints with colorants free of lead, lead compounds, or other materials that might be affected by presence of hydrogen sulfide or other gas likely to be present at the site.

PART 3 - EXECUTION

3.1 EXAMINATION

A. Surface Preparation Verifications:

1. Inspect and provide substrate surfaces prepared in accordance with these Specifications and the printed directions and recommendations of paint Manufacturer whose product is to be applied. The more stringent requirements shall apply.
2. Provide Engineer minimum 7 days advance notice to start of shop or field surface preparation work and coating application work.
3. Perform such work only in presence of Engineer, unless Engineer grants prior approval to perform such work in Engineer's absence.

B. Schedule inspection with Engineer in advance for cleaned surfaces and all coats prior to succeeding coat.

3.2 PREPARATION

A. Shop Blast Cleaning:

1. Notify Engineer at least 7 days prior to start of shop blast cleaning to allow for inspection of the work during surface preparation and shop application of paints.
2. Structural steel, metal doors and frames, metal louvers, and similar items, as reviewed by Engineer, may be shop prepared and primed.

B. Field Abrasive Blasting: Perform blasting for items and equipment where specified and as required to restore damaged surfaces previously shop or field blasted and primed.

C. Protection of Items not to be painted:

1. Remove, mask, or otherwise protect hardware, lighting fixtures, switch plates, aluminum surfaces, machined surfaces, couplings, shafts, bearings, nameplates on machinery, and other surfaces not intended to be painted.
2. Provide drop cloths to prevent paint materials from falling on or marring adjacent surfaces.
3. Protect working parts of mechanical and electrical equipment from damage during surface preparation and painting process.
4. Mask openings in motors to prevent paint and other materials from entering the motors.

3.3 PREPARATION OF SURFACES

A. Metal Surfaces:

1. Where indicated, meet requirements of the following SSPC Specifications:
   a. Solvent Cleaning: SP 1.
   b. Hand Tool Cleaning: SP 2.
   c. Power Tool Cleaning: SP 3.
   d. White Metal Blast Cleaning: SP 5.
   e. Commercial Blast Cleaning: SP 6.
   f. Brush-Off Blast Cleaning: SP 7.
   g. Pickling: SP 8.
   h. Near-White Blast Cleaning: SP 10.
   i. Power Tool Cleaning to Bare Metal: SP 11.
2. The words "solvent cleaning", "hand tool cleaning", "wire brushing" and "blast cleaning", or similar words of equal intent in these Specifications, or in paint manufacturer's specifications, refer to the applicable SSPC Specifications.
3. Where OSHA or EPA regulations preclude standard abrasive blast cleaning, wet or vacu-blast methods may be required. Coating Manufacturers' recommendations for wet blast additives and first coat application shall apply.
4. Ductile Iron Pipe:
   a. Use SSPC SP grades as guide only.
   b. For high performance (epoxy) coatings, follow recommendations of pipe and coating Manufacturers.
   c. The surface preparation and application of the primer for flanged pipe exposed in the final work (all non-buried pipe) shall be performed by the pipe Manufacturer. The primer used by the Manufacturer **shall** be compatible with the finish coats to be applied by the Contractor in the field. Flanged pipe delivered to the job site primed with non-compatible primer will be field blasted to remove the primer, and re-primed and finished coated in the field. Flanged pipe delivered to the job site with bitumastic coating will be rejected. Hand tool clean areas that cannot be cleaned by power tool cleaning.
5. Round or chamfer sharp edges and grind smooth burrs, jagged edges, and surface defects.
6. Welds and Adjacent Areas:
   a. Prepare such that there is:
      1) No undercutting or reverse ridges on weld bead.
      2) No weld spatter on or adjacent to weld or any other area to be painted.
      3) No sharp peaks or ridges along weld bead.
   b. Grind embedded pieces of electrode or wire flush with adjacent surface of weld bead.

7. Pre-blast Cleaning Requirements:
   a. Remove oil, grease, welding fluxes, and other surface contaminants prior to blast cleaning.
   b. Cleaning Methods: Steam, open flame, hot water, or cold water with appropriate detergent additives followed with clean water rinsing.
   c. Clean small isolated areas as above or solvent clean with suitable solvents and clean cloths.
8. Blast Cleaning Requirements:
   a. Type of Equipment and Speed of Travel: Design to obtain specified degree of cleanliness. Minimum surface preparation is as specified herein and takes precedence over coating Manufacturer's recommendations.
   b. Select type and size of abrasive to produce a surface profile that meets coating Manufacturer's recommendations for particular primer to be used.
   c. Use only dry blast cleaning methods.
   d. Do not reuse abrasive, except for designed recyclable systems. Must meet applicable federal, state, and local air pollution and environmental control regulations for blast cleaning, confined space entry (if required), and disposition of spent aggregate and debris.
9. Post-Blast Cleaning and Other Cleaning Requirements:
   a. Clean surfaces of dust and residual particles from cleaning operations by dry (no oil or water vapor) air blast cleaning or other method prior to painting. Vacuum clean enclosed areas and other areas where dust settling is a problem and wipe with a tack cloth.
   b. Paint surfaces the same day they are blasted. Re-blast surfaces that have started to rust before they are painted.

B. Galvanized Surfaces:

1. Remove soil, cement spatter, and other surface dirt with appropriate hand or power tools.
2. Remove oil and grease by wiping or scrubbing the surface with a suitable solvent, rags and brushes. Use clean solvent and clean rags for the final wiping to avoid contaminating the surface.
3. Obtain coating Manufacturer's recommendations for additional preparation that may be required.

C. Concrete Surfaces:

1. Do not begin until 30 days after concrete has been placed.
2. Remove grease, oil, dirt, salts or other chemicals, loose materials, or other foreign matter by solvent, detergent, or other suitable cleaning methods.
3. Provide meeting the requirements for the protective coating or protective liner:

a. Brush-off blast clean to remove loose concrete and provide a tooth for binding. Upon approval by ENGINEER, surface may be cleaned by acid etching method. Approval subject to producing desired profile.
b. Abrasive blast or equivalent to remove laitance, form release agents, curing compounds, sealers and other contaminants and provide a surface profile meeting SSPC-SP 13.

4. Secure coating Manufacturer's recommendations for additional preparation if required for excessive bug holes exposed after blasting.
5. Unless otherwise required for proper adhesion, ensure surfaces are dry prior to painting.

D. Plastic Surfaces:

1. Hand sand plastic surfaces to be coated with a medium grit sandpaper to provide tooth for the coating system.
2. Large areas may be power sanded or brush-off blasted, provided sufficient controls are employed so surface is roughened without removing excess material.

3.4 SURFACE CLEANING METHODS

A. Brush-off Blast Cleaning:

1. Equipment, procedure, and degree of cleaning shall meet requirements of SSPC- SP 7, Brush-off Blast Cleaning.
2. Abrasive: Either wet or dry blasting sand, grit, or nut shell.
3. Select various surface preparation parameters such as size and hardness of abrasive, nozzle size, air pressure, and nozzle distance from surface such that surface is cleaned without pitting, chipping, or other damage.
4. Verify parameter selection by blast cleaning a trial area that will not be exposed to view.
5. Engineer will approve acceptable trial blast cleaned area and will use area as a representative sample of surface preparation.
6. Repair or replace surfaces damaged by blast cleaning.

B. Acid Etching:

1. After pre-cleaning, spread the following solution by brush or plastic sprinkling can: 1 part commercial Muriatic acid reduced by 2 parts water by volume. Adding acid to water in these proportions gives an approximate 10% solution of HCl.
2. Application:
   a. Application Rate: Approximately 2 gallons per 100 square feet.
   b. Work acid solution into surface by hard-bristled brushes or brooms until complete wetting and coverage is obtained.

c. Acid will react vigorously for a few minutes, during which time brushing is continued.
d. After bubbling subsides (10 minutes), hose down the remaining slurry with high pressure clean water.
e. Rinse immediately to avoid formation on the surface of salts that are difficult to remove.
f. Thoroughly rinse to remove any residual acid surface condition which can impair adhesion.

3. Ensure surface is completely dry before application of coating.
4. Apply acid etching, to obtain a "grit sandpaper" surface profile. If not, repeat treatment.

C. Solvent Cleaning:

1. Consists of removal of foreign matter such as oil, grease, soil, drawing and cutting compounds, and any other surface contaminants by using solvents, emulsions,

   cleaning compounds, steam cleaning, or similar materials and methods which involve a solvent or cleaning action.
2. Meets requirements of SSPC-SP 1.

D. Concrete Surface Preparation:

1. Surface preparation of concrete by mechanical, chemical, or thermal methods prior to the application of bonded protective coating or lining systems. An acceptable prepared concrete surface shall be free of contaminants, laitance, loosely adhering concrete, and dust, and should provide a dry, sound, uniform substrate suitable for the application of protective coating or lining systems.
2. Meets requirements of SSPC-SP 13.

3.5 APPLICATION

A. General:

1. Extent of Coating (Immersion): Coatings shall be applied to all internal vessel and pipe surfaces, nozzle bores, flange gasket sealing surfaces, carbon steel internals, and stainless steel internals, unless otherwise specified.
2. For coatings subject to immersion, obtain full cure for completed system. Consult coatings Manufacturer's written instructions for these requirements. Do not immerse coating for any purpose until completion of curing cycle.
3. Apply coatings in accordance with these Specifications and the paint Manufacturers' printed recommendations and special details. The more stringent requirements shall apply. Allow sufficient time between coats to assure thorough drying of previously applied paint.

4. Apply each coat of paint slightly darker than preceding coat unless otherwise approved.
5. Sand wood and metal lightly between coats to achieve required finish.
6. Vacuum clean surfaces free of loose particles. Use tack cloth just prior to applying next coat.
7. Fusion Bonded Coatings Method Application: Electrostatic, fluidized bed, or flocking.
8. Coat units or surfaces to be bolted together or joined closely to structures or to one another prior to assembly or installation.
9. Where more than one coat of a material is applied within a given system, alternate color to provide a visual reference that the required number of coats have been applied.

B. Galvanized Metal:

1. Concealed galvanized surfaces (behind building panels or walls) do not required painting unless specifically indicated herein.
2. Prepare surface and apply wash primer or coating Manufacturer's recommended coating. This primer will replace the required paint system's indicated primer.
3. Apply coating system appropriate for the exposure (intermediate/finish coats).

C. Shop Primed and Factory Finished Surfaces:

1. Schedule inspection with Engineer before shop priming or top-coating factory finished items delivered to site.
2. Prepare surfaces and spot prime using specified primer.
3. Apply mist coat of primer, 1-mil dry film thickness.
4. After welding, prepare and prime holdback areas as required for paint system. Apply primer in accordance with Manufacturer's instructions.

D. Manufacturer Applied Paint Systems:

1. Repair abraded areas on factory finished items as recommended by Manufacturer.
2. Carefully blend repaired areas into original finish.
3. Fusion Bonded Coatings: Provide appropriate liquid repair kits for field use.

E. Film Thickness:

1. Number of Coats: Minimum required without regard to coating thickness. Additional coats may be required to obtain minimum required paint thickness, depending on method of application, differences in Manufacturers' products, and atmospheric conditions.
2. Maximum film build per coat shall not exceed coating Manufacturer's recommendations.

3. Film Thickness Measurements and Electrical Inspection of Coated Surfaces:
   a. Perform with properly calibrated instruments.
   b. Recoat and repair as necessary for compliance with the Specifications.
   c. All coats are subject to inspection by Engineer and coating manufacturer's representative.
4. Visually inspect concrete, nonferrous metal, plastic, and wood surfaces to ensure proper and complete coverage has been attained.
5. Give particular attention to edges, angles, flanges, and other similar areas, where insufficient film thicknesses are likely to be present, and ensure proper millage in these areas.
6. Thickness Testing:
   a. After repaired and recoated areas have dried sufficiently, final tests will be conducted by the Engineer.
   b. Measure coating thickness specified in mils with a magnetic type dry film thickness gauge.

   c. Test finish coat, except zinc primer, galvanizing, and elastomeric coatings in excess of 25 mils dry, for holidays and discontinuities with an electrical holiday detector.
   d. Holiday detect coatings in excess of 25 mils dry with high voltage units recommended by the coating manufacturer.
   e. All pinholes or defects shall be repaired in accordance with manufacturer's printed recommendations and then retested.
   f. Check each coat for correct millage. Do not make measurement before a minimum of 8 hours after application of coating.
   g. Make as many determinations as needed to ensure the specified thickness values in each typical area. To all surfaces having less dry film thickness than specified, apply additional coat(s) at no extra cost to Owner to bring thickness up to specifications.

F. Porous Surfaces, Such As Concrete, Masonry:

1. Filler/Surfacer: Use coating Manufacturer's recommended product to fill air holes, bug holes, and other surface defects.
2. Prime Coat: May be thinned to provide maximum penetration and adhesion.
   a. Type and Amount of Thinning: Determined by paint manufacturer and dependent on surface density and type of coating.
3. Surfaces Specified to Receive Water Base Coating: Damp, but free of running water, just prior to application of coating.

G. Damaged Coatings, Pinholes, and Holidays:

1. Feather edges and repair in accordance with recommendations of paint Manufacturer.

2. Apply finish coats, including touchup and damage-repair coats in a manner which will present a uniform texture and color-matched appearance.

H. Unsatisfactory Application:

1. If item has an improper finish color, or insufficient film thickness, clean surface and topcoat with specified paint material to obtain specified color and coverage. Obtain specific surface preparation information from coating manufacturer.
2. Hand or power sand visible areas of chipped, peeled, or abraded paint, and feather the edges. Follow with primer and finish coat. Depending on extent of repair and appearance, a finish sanding and topcoat may be required.
3. Evidence of runs, bridges, shiners, laps, or other imperfections is cause for rejection.
4. Repair defects in accordance with written recommendations of coating Manufacturer.
5. Leave staging and lighting up until Engineer has inspected surface or coating. Replace staging removed prior to approval by Engineer. Provide additional staging and lighting as requested by Engineer.

3.6 FIELD QUALITY CONTROL

A. Testing Gauges:

1. Provide a magnetic type dry film thickness gauge to test coating thickness specified in mils, as manufactured by Nordson Corp., Anaheim, CA, Mikrotest.
2. Provide an electrical holiday detector, low voltage, wet sponge type to test finish coat, except zinc primer, high-build elastomeric coatings, and galvanizing, for holidays and discontinuities as manufactured by Tinker and Rasor, San Gabriel, CA, Model M-1.
3. Provide a high voltage holiday detector for elastomeric coatings in excess of 25 mils dry film thickness. Unit to be as recommended by the coating Manufacturer.

3.7 MANUFACTURER'S SERVICES

A. Provide Manufacturer's representative at site in accordance with Section 01 79 00, DEMONSTRATION AND TRAINING, for installation assistance, inspection, and certification of installation.

3.8 CLEANUP

A. Place cloths and waste that might constitute a fire hazard in closed metal containers or destroy at the end of each day.

B. Upon completion of the Work, remove staging, scaffolding, and containers from the site or destroy in a legal manner.

C. Completely remove paint spots, oil, or stains upon adjacent surfaces and floors and leave entire job clean.

3.9 PROTECTIVE COATINGS SYSTEMS

NOTE: It is essential that all primers (including those applied in the shop) be compatible with finish coat(s) to be installed on the involved item. Items delivered to the job site with primers that are not compatible with the finished coat(s) to be field applied will be blasted in accordance with the paint manufacturer's recommendations to remove the non-compatible primer, and then re-primed and finish coated in the field.

A. System No.2 Submerged Metal-Domestic Sewage:

Surface Prep.	Paint Material	Min. Coats, Cover
Abrasive Blast, or Centrifugal Wheel Blast (SP 5)	Prime in accordance with manufacturer's recommendations	
	Coal-Tar Epoxy	2 coats, 16 Mil MDFTPC

B. System No. 3 Exposed Metal-Highly Corrosive:

Surface Prep.	Paint Material	Min. Coats, Cover
Abrasive Blast, or Centrifugal Wheel Blast (SP 10)	Modified Aromatic Polyurethane Primer	1 coat, 3.0 Mil MDFT
	Hydrophobic Aromatic Polyurethane	2 coats, 7.0 Mil MDFTPC
	Aliphatic Acrylic Polyurethane	1 coat, 2.5 Mil MDFT

C. System No. 4 Exposed Metal-Mildly Corrosive:

Surface Prep.	Paint Material	Min. Coats, Cover
Abrasive Blast, or Centrifugal Wheel Blast (SP 10)	High Build Epoxy	2 coats, 4.0 Mil MDFT first coat, 2.5 Mil MDFT second coat
	Aliphatic Acrylic Polyure-thane	1 coat, 2.5 Mil MDFT

D. System No. 15 Aluminum and Dissimilar Metal Insulation:

Surface Prep.	Paint Material	Min. Coats. Cover
Solvent Clean (SP 1)	Wash Primer	1 coat, 0.4 Mil MDFT
	Bituminous Paint	1 coat, 10 Mil MDFT

3.10 PROTECTIVE COATINGS APPLICATION SCHEDULE

A. Unless otherwise shown or specified, paint surfaces in accordance with the following application schedule. In the event of discrepancies or omissions, request clarification from Engineer before starting work in question.

B. System No. 2 Submerged Metal-Domestic Sewage: Use on the following items or areas:

1. All metal surfaces within the pump station wet well including pumps, motors, gear reducers, drive assemblies, discharge piping and fittings , concrete embedded surfaces of metallic items, such as wall pipes, pipes, pipe sleeves, access manholes, and structural steel.

C. System No. 3 Exposed Metal-Highly Corrosive: Use on the following items or areas:

1. All interior exposed structural steel, bolted connections, pipe, fittings, and other interior exposed metal structures that are within the pump station wetwell.

D. System No. 4 Exposed Metal-Mildly Corrosive: Use on the following items or areas:

1. Exposed metal surfaces, new and existing located inside or outside of structures and exposed to weather or in a highly humid atmosphere, such as vaults and similar areas:
   a. Valve Vault

E. System No. 15 Aluminum and Dissimilar Metal Insulation: Use on the following items or areas:

1. Aluminum surfaces embedded or in contact with concrete, masonry, and other metals.
2. Stainless steel surfaces embedded in concrete.
3. Dissimilar metals for electrical insulation.

F. Surfaces Not Requiring Protective Painting: Unless otherwise stated or shown, the following areas or items will not require protective painting or coating:

1. Existing concrete and masonry surfaces, except as required for moisture protection, concrete protective coating specified above, cement waterproofing and finishing as specified herein, or architectural painting or coloring.
2. Reinforcing steel.
3. Nonferrous and corrosion-resistant ferrous alloys such as copper, bronze, Monel, aluminum, chromium plate, atmospherically exposed weathering steel, and stainless steel, except where:
   a. Required for electrical insulation between dissimilar metals.
   b. Aluminum and stainless steel are embedded in concrete or masonry, or aluminum is in contact with concrete or masonry.
   c. Color coding of equipment and piping is required.
4. Nonmetallic materials such as glass, PVC, wood, porcelain, and plastic (FRP) except as required for exposed-to-view PVC and CPVC, as required for FRP without integral UV resistant gel coat, and as required for architectural painting or color coding.
5. Pre-finished electrical items such as motor control centers, switchboards, switchgear, panelboards, transformers, disconnect switches (if pre-finished in OSHA yellow); except color coding of equipment is required.
6. Non-submerged electrical conduits attached to unpainted concrete surfaces.
7. Cathodic protection anodes.
8. Items specified to be galvanized after fabrication, unless specified elsewhere, subject to highly corrosive exposure, or subject to immersion.
9. Insulated piping and insulated piping with jacket will not require exterior coating, except as required for architectural painting or color coding.

3.11 CEMENT WATER PROOFING AND FINISHING APPLICATION SCHEDULE

A. All interior and exterior faces (except top surfaces of slab) exposed to view, such as walls, grade beams, columns, beams, canopy soffits and facias, interior walls of valve vault, etc., shall be finished using "Thoroseal" by Thoro Products, or equal, as specified in the following paragraphs.

B. General: Forms shall be removed, as specified in Section 03 11 00 CONCRETE FORMWORK, and concrete shall receive finish as specified in Section 03 30 00, CAST IN PLACE CONCRETE. Additionally, all fins removed, off-sets leveled, damage places and depressions resulting from the removal of metal ties or other causes shall be carefully pointed with a mortar of sand and cement in proportion which has been employed for the particular class of concrete treated. The surface film of all such pointed places shall be carefully removed before setting occurs. After the point has set sufficiently to permit it, all exposed surfaces shall receive the following treatment.

C. Exterior Surfaces – All Concrete Walls: Coating for exterior concrete walls shall be:

1. A base coast of "Thoroseal" with acryl 60, or equal, applied at a rate of 2 lbs/sy to a dry film thickness of 25 mils.
2. A second coat of "Thoroseal" with acryl 60, or equal, applied at a rate of 1 lbs/sy to a dry film thickness of 15 mils.
3. A final coat of "Thorosheen", or equal, applied at the rate of 200 sf per gallon to a dry film thickness of 4 to 5 mils.

D. Do not apply when temperatures are 40 degrees F or due to fall below 40 degrees F within 24 hours or to frozen or frost-filled surfaces.

E. Color of each coat shall be selected by the Owner and Engineer from the standard color manufactured. Texture shall be smooth. Mixing and application shall be in accordance with manufacturer's recommendations.

F. At the completion of work of other trades, touch up and restore all damaged or defaced painted surfaces.

3.12 COLORS

A. Pipe Identification Painting:

1. Color code non submerged metal piping except electrical conduit. Paint fittings and valves the same color as pipe, except equipment isolation valves.
2. On exposed stainless steel piping, apply color 24" in length along pipe axis at connections to equipment, valves, or branch fittings, at wall boundaries, and at intervals along piping not greater than 9' on center.
3. Pipe Supports: Mild steel, painted No. 70 light gray as specified in ANSI 359-A, as manufactured by Tnemec Co., No. BJ45.
4. Fiberglass reinforced plastic (FRP) pipe and polyvinyl chloride (PVC) pipe located outside of buildings and enclosed structures will not require painting, except as noted or scheduled.

B. Colors: As approved by Owner and Engineer.

C. Proprietary identification of colors is for identification only. Selected Manufacturer may supply matches.

D. Equipment Colors:

1. Equipment includes the machinery or vessel itself plus the structural supports and fasteners and attached electrical conduits.
2. Paint equipment and piping one color as selected.
3. Paint non submerged portions of equipment the same color as the piping it serves, except as itemized below:
   a. Dangerous Parts of Equipment and Machinery: OSHA Orange.
   b. Fire Protection Equipment and Apparatus: OSHA Red.
   c. Radiation Hazards: OSHA Purple.
   d. Physical hazards in normal operating area and energy lockout devices, including, but not limited to, electrical disconnects for equipment and equipment isolation valves in air and liquid lines under pressure: OSHA Yellow.
4. Fiberglass reinforced plastic (FRP) equipment with an integral colored gel coat does not require painting, provided the color is as selected.

END OF SECTION

SECTION 16075

ELECTRICAL IDENTIFICATION

PART 1 - GENERAL

1.01 RELATED DOCUMENTS

A. Drawings and general provisions of the Contract, including General and Supplementary Conditions and Division 1 Specification Sections, apply to this Section.

1.02 SUMMARY

A. This Section includes electrical identification materials and devices required to comply with ANSI C2, NFPA 70, OSHA standards, and authorities having jurisdiction.

1.03 QUALITY ASSURANCE

A. Comply with ANSI C2.

B. Comply with NFPA 70.

C. Comply with ANSI A13.1 and NFPA 70 for color-coding.

PART 2 - PRODUCTS

2.01 RACEWAY AND CABLE LABELS

A. Comply with ANSI A13.1, Table 3, for minimum size of letters for legend and for minimum length of color field for each raceway and cable size.

1. Color: Black letters on orange field.

2. Legend: Indicates voltage and service.

B. Adhesive Labels: Preprinted, flexible, self-adhesive vinyl with legend overlaminated with a clear, weather- and chemical-resistant coating.

C. Pretensioned, Wraparound Plastic Sleeves: Flexible, preprinted, color-coded, acrylic band sized to suit the diameter of the line it identifies and arranged to stay in place by pretensioned gripping action when placed in position.

D. Colored Adhesive Tape: Self-adhesive vinyl tape not less than 3 mils thick by 1 to 2 inches wide.

E. Underground-Line Warning Tape: Permanent, bright-colored, continuous-printed, vinyl tape.

1. Not less than 6 inches wide by 4 mils thick.

2. Compounded for permanent direct-burial service.

3. Embedded continuous metallic strip or core.

4. Printed legend indicating type of underground line.

F. Tape Markers: Vinyl or vinyl-cloth, self-adhesive, wraparound type with preprinted numbers and letters.

G. Plasticized Card-Stock Tags: Vinyl cloth with preprinted and field-printed legends. Orange background, unless otherwise indicated, with eyelet for fastener.

2.02 NAMEPLATES AND SIGNS

A. Safety Signs: Comply with 29 CFR, Chapter XVII, Part 1910.145.

B. Engraved Plastic Nameplates and Signs: Engraving stock, melamine plastic laminate, minimum 1/16 inch thick for signs up to 20 sq. in. and 1/8 inch thick for larger sizes.

1. Engraved legend with black letters on white face.

2. Punched or drilled for mechanical fasteners.

C. Baked-Enamel Signs for Interior Use: Preprinted aluminum signs, punched or drilled for fasteners, with colors, legend, and size required for the application. 1/4-inch grommets in corners for mounting.

D. Exterior, Metal-Backed, Butyrate Signs: Weather-resistant, nonfading, preprinted, cellulose-acetate butyrate signs with 0.0396-inch galvanized-steel backing; and with colors, legend, and size required for the application. 1/4-inch grommets in corners for mounting.

E. Fasteners for Nameplates and Signs: Self-tapping, stainless-steel screws or No. 10/32, stainless-steel machine screws with nuts and flat and lock washers.

2.03 MISCELLANEOUS IDENTIFICATION PRODUCTS

A. Cable Ties: Fungus-inert, self-extinguishing, one-piece, self-locking, Type 6/6 nylon cable ties.

1. Minimum Width: 3/16 inch.

2. Tensile Strength: 50 lb minimum.

3. Temperature Range: Minus 40 to plus 185 deg F.

4. Color: According to color-coding.

B. Paint: Formulated for the type of surface and intended use.

1. Primer for Galvanized Metal: Single-component acrylic vehicle formulated for galvanized surfaces.

2. Primer for Concrete Masonry Units: Heavy-duty-resin block filler.

3. Primer for Concrete: Clear, alkali-resistant, binder-type sealer.

4. Enamel: Silicone-alkyd or alkyd urethane as recommended by primer manufacturer.

PART 3 - EXECUTION

3.01 INSTALLATION

A. Identification Materials and Devices: Install at locations for most convenient viewing without interference with operation and maintenance of equipment.

B. Lettering, Colors, and Graphics: Coordinate names, abbreviations, colors, and other designations with corresponding designations in the Contract Documents or with those required by codes and standards. Use consistent designations throughout Project.

C. Sequence of Work: If identification is applied to surfaces that require finish, install identification after completing finish work.

D. Self-Adhesive Identification Products: Clean surfaces before applying.

E. Circuits with More Than 600 V: Identify raceway and cable with "DANGER--HIGH VOLTAGE" in black letters 2 inches high, stenciled with paint at 10-foot intervals over a continuous, painted orange background. Identify the following:

1. Entire floor area directly above conduits running beneath and within 12 inches of a basement or ground floor that is in contact with earth or is framed above unexcavated space.

2. Wall surfaces directly external to conduits concealed within wall.

3. All accessible surfaces of concrete envelope around conduits in vertical shafts, exposed in the building, or concealed above suspended ceilings.

4. Entire surface of exposed conduits.

F. Install painted identification according to manufacturer's written instructions and as follows:

1. Clean surfaces of dust, loose material, and oily films before painting.

2. Prime surfaces using type of primer specified for surface.

3. Apply one intermediate and one finish coat of enamel.

G. Exposed Cables: Band exposed of the systems listed below:

1. Bands: Pretensioned, wraparound plastic sleeves; colored adhesive tape; or a combination of both. Make each color band 2 inches wide, and place adjacent bands of two-color markings in contact, side by side.

2. Band Locations: At changes in direction, at penetrations of walls and floors, at 50-foot maximum intervals in straight runs, and at 25-foot maximum intervals in congested areas.

3. Apply the following colors to the systems listed below:

a. Fire Alarm System: Red.
b. Fire-Suppression Supervisory and Control System: Red and yellow.
c. Combined Fire Alarm and Security System: Red and blue.
d. Security System: Blue and yellow.
e. Mechanical and Electrical Supervisory System: Green and blue.
f. Telecommunication System: Green and yellow.

H. Caution Labels for Indoor Boxes and Enclosures for Power and Lighting: Install pressure-sensitive, self-adhesive labels identifying system voltage

with black letters on orange background. Install on exterior of door or cover.

I. Circuit Identification Labels on Boxes: Install labels externally.

1. Exposed Boxes: Pressure-sensitive, self-adhesive plastic label on cover.

2. Concealed Boxes: Permanent marker on cover showing circuit ID.

J. Paths of Underground Electrical Lines: During trench backfilling, for exterior underground power, control, signal, and communication lines, install continuous underground plastic line marker located directly above line at 6 to 8 inches below finished grade. Where width of multiple lines installed in a common trench or concrete envelope does not exceed 16 inches overall, use a single line marker. Install line marker for underground wiring, both direct-buried cables and cables in raceway.

K. Color-Coding of Secondary Phase Conductors: Use the following colors for service, feeder and branch-circuit phase conductors:

1. 208/120-V Conductors:

a. Phase A: Black.
b. Phase B: Red.
c. Phase C: Blue.

2. 480/277-V Conductors:

a. Phase A: Brown.
b. Phase B: Orange.
c. Phase C: Yellow.

3. Factory apply color the entire length of conductors, except the following field-applied color-coding methods may be used instead of factory-coded wire for sizes larger than No. 10 AWG:

a. Colored, pressure-sensitive plastic tape in half-lapped turns for a distance of 6 inches from terminal points and in boxes where splices or taps are made. Apply last two turns of tape with no tension to prevent possible unwinding. Use 1-inch-wide tape in colors specified. Adjust tape bands to avoid obscuring cable identification markings.

4. See Section 16060 "Grounding and Bonding" for color coding of grounding and isolated grounding conductors.

L. Power-Circuit Identification: Metal tags or aluminum, wraparound marker bands for cables, feeders, and power circuits in vaults, pull and junction boxes, manholes, and switchboard rooms.

1. Legend: 1/4-inch steel letter and number stamping or embossing with legend corresponding to indicated circuit designations.

2. Tag Fasteners: Nylon cable ties.

3. Band Fasteners: Integral ears.

M. Apply identification to conductors as follows:

1. Conductors to Be Extended in the Future: Indicate source and circuit numbers.

2. Multiple Power or Lighting Circuits in the Same Enclosure: Identify each conductor with source, voltage, circuit number, and phase. Use color-coding to identify circuits' voltage and phase.

3. Multiple Control and Communication Circuits in the Same Enclosure: Identify each conductor by its system and circuit designation. Use a consistent system of tags, color-coding, or cable marking tape.

N. Apply warning, caution, and instruction signs as follows:

1. Warnings, Cautions, and Instructions: Install to ensure safe operation and maintenance of electrical systems and of items to which they connect. Install engraved plastic-laminated instruction signs with approved legend where instructions are needed for system or equipment operation. Install metal-backed butyrate signs for outdoor items.

2. Emergency Operation: Install engraved laminated signs with white legend on red background with minimum 3/8-inch high lettering for emergency instructions on power transfer, load shedding, and other emergency operations.

O. Equipment Identification Labels: Engraved plastic laminate. Install on each unit of equipment, including central or master unit of each system. This includes power, lighting, communication, signal, and alarm systems, unless units are specified with their own self-explanatory identification. Unless otherwise indicated, provide a single line of text with 1/2-inch high lettering on 1-1/2-inch- high label; where two lines of text are required, use labels 2 inches high. Use white lettering on black field. Apply labels for

each unit of the following categories of equipment using mechanical fasteners:

1. Panelboards, electrical cabinets, and enclosures.
2. Access doors and panels for concealed electrical items.
3. Electrical switchgear and switchboards.
4. Emergency system boxes and enclosures.
5. Disconnect switches.
6. Enclosed circuit breakers.
7. Motor starters.
8. Push-button stations.
9. Power transfer equipment.
10. Contactors.
11. Remote-controlled switches.
12. Dimmers.
13. Control devices.
14. Transformers.
15. Fire alarm master station or control panel.

END OF SECTION

PERFORMANCE CURVE

PRODUCT	CP 3231 /735
TYPE	
DATE	2008-02-28
PROJECT	Big Orange PS - City of Memphis
CURVE NO	63-430
ISSUE	8

	1/1-LOAD	3/4-LOAD	1/2-LOAD
POWER FACTOR	0.88	0.84	0.76
EFFICIENCY	93.5 %	94.0 %	93.0 %
MOTOR DATA	---	---	---

RATED POWER	250	hp
STARTING CURRENT ...	2030	A
RATED CURRENT ...	284	A
RATED SPEED	1780	rpm
TOT.MOM.OF INERTIA ...	2.5	kgm2
NO. OF BLADES	2	

IMPELLER DIAMETER: 405 mm

MOTOR #	STATOR	REV
43-44-4AA	01D	13

FREQ.	PHASES	VOLTAGE	POLES
60 Hz	3	460 V	4

GEARTYPE	RATIO
---	---

COMMENTS

INLET/OUTLET: -/ 8 inch

IMP. THROUGHLET: 3.5 inch

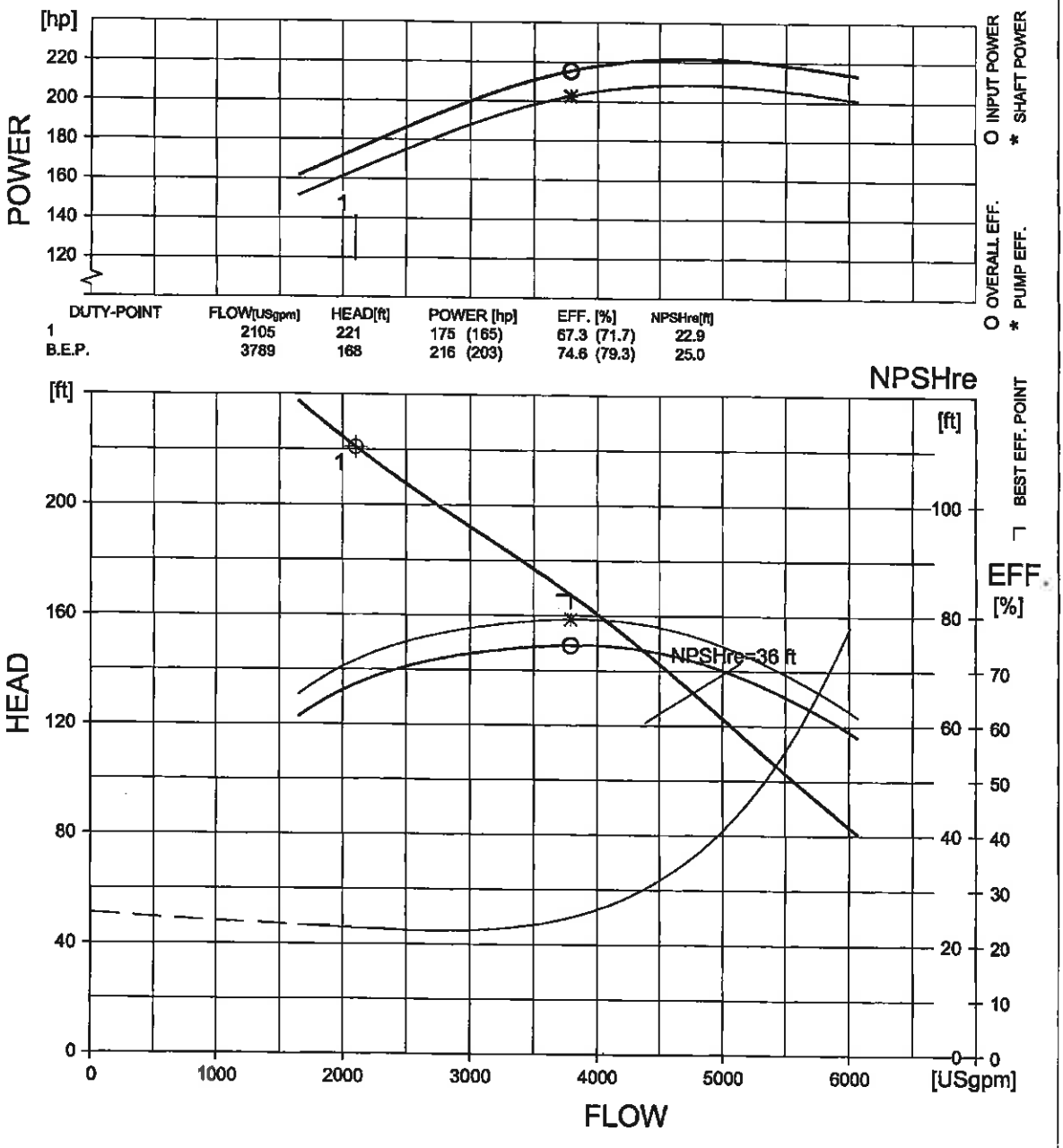

DUTY-POINT	FLOW[USgpm]	HEAD[ft]	POWER [hp]	EFF. [%]	NPSHre[ft]
1	2105	221	175 (165)	67.3 (71.7)	22.9
B.E.P.	3789	168	216 (203)	74.6 (79.3)	25.0

FLYPS3.1.6.2 (20060531)

NPSHre = NPSH3% + min. operational margin

Performance with clear water and ambient temp 40 °C

HI B Curve

Duty Analysis - Duty conditions

Project: Big Orange PS - City of Memphis

Created by:: George Peart

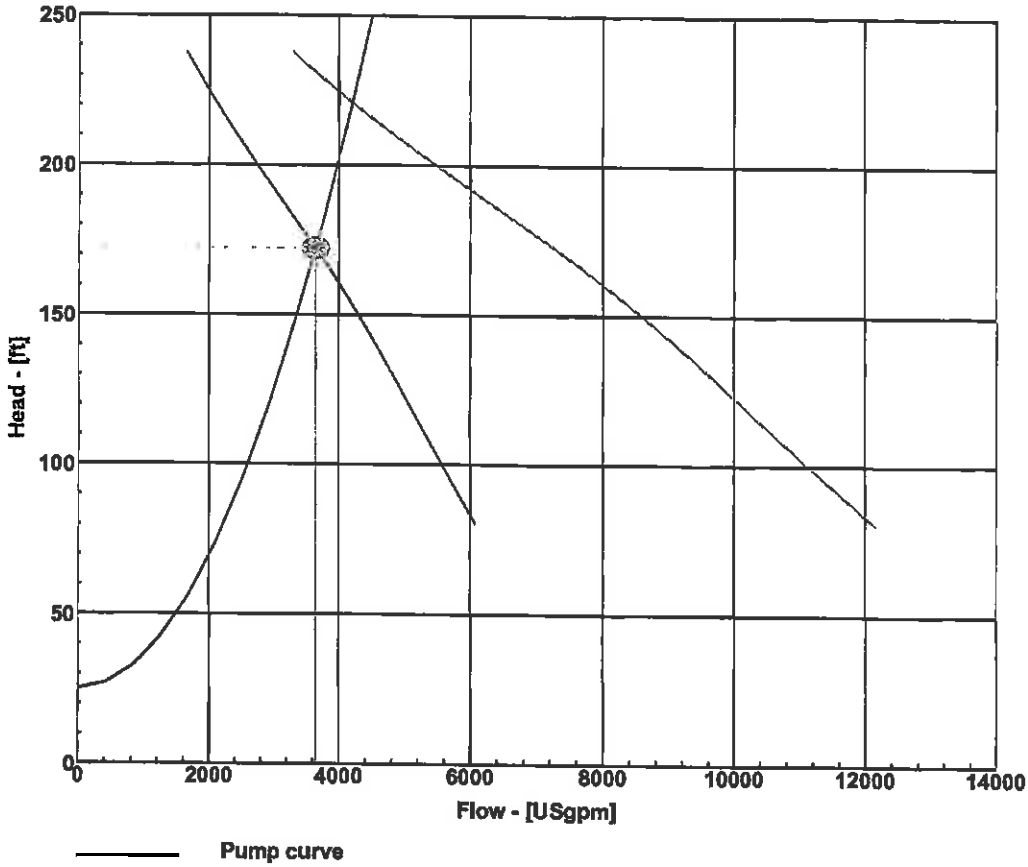

1 CP 3231 63-430

PRODUCT DATA

Rtd. pwr.: 250 hp

Imp. diam.: 405 mm

Vanes: 2

Throughlet: 3.5 Inch

DUTY CONDITIONS

No of pumps: 1

Flow: 3649.2 USgpm

Head: 172.2 ft

Shaft power: 200.7 hp

Pump efficiency: 79.2 %

Specifc energy: 725.7 kWh/mg

NPSHre: 24.2 ft

Flygt

ITT Industries

Duty Analysis - Duty conditions

Project: Big Orange PS - City of Memphis

Created by:: George Peart

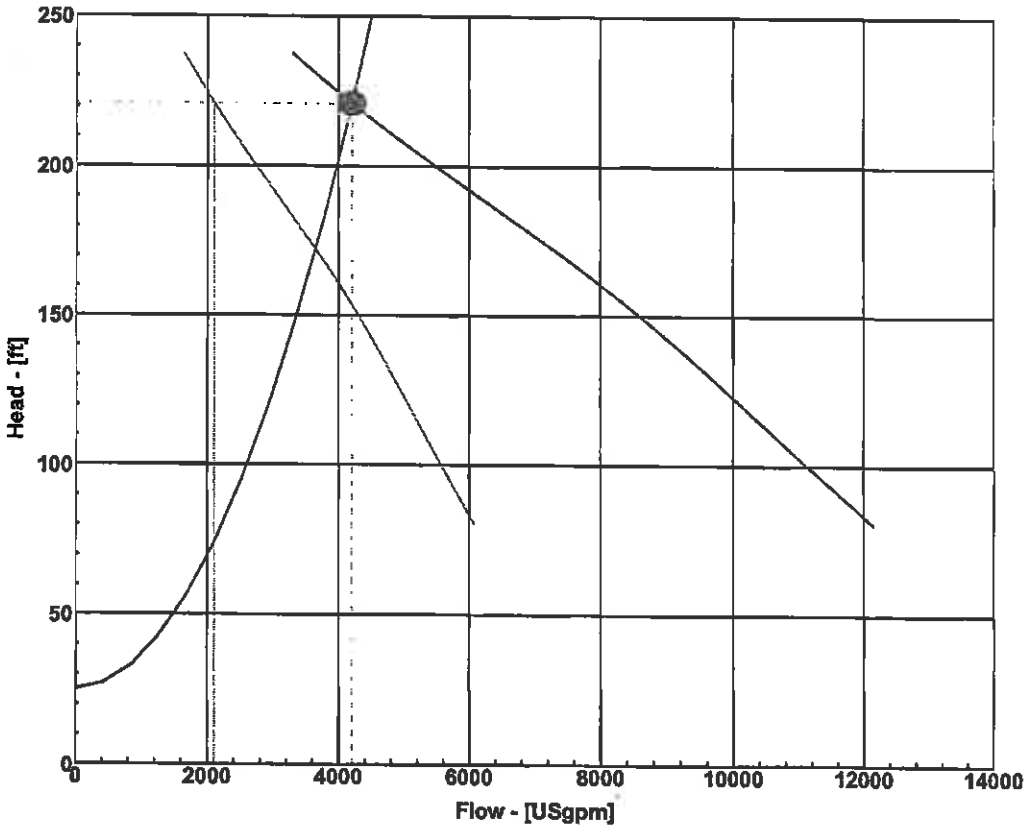

Pump curve

2 CP 3231 63-430

PRODUCT DATA

Rtd. pwr.: 250 hp

Imp. diam.: 405 mm

Vanes: 2

Throughlet: 3.5 inch

DUTY CONDITIONS

No of pumps: 2

Flow: 4209.6 USgpm

Head: 220.9 ft

Shaft power: 328.1 hp

Pump efficiency: 71.7 %

Specifc energy: 1030.3 kWh/mg

NPSHre: 22.9 ft

Flygt

ITT Industries

FLYGT

Rating

Frequency	60 Hz	Product	3231 . 000	Issue	4
Phases	3	Motor #	43-44-4AA	# of Starts/Hr	15
Poles	4	Rated power	250.0 hp	Issue date	
Approval		Installations	PSTZ	Valid from	2/19/2003
-	N	Type of duty	S1	Status	APPR

Rtd. amb. temp. 40 °C / 104 °F

	Alternative 1	*Alternative 2*		
Voltage	460 V	V	Stator variant	01
Connection	D		Speed	1780 r/min
Rtd. Curr.	284.0 A	A	Module	110
Starting current	2030.0 A	A	Motor issue	13
Power factor	0.88			
NEMA code letter	H			

Warm liquid data	Note! Reduced rated power			
Rtd. amb. temp.	°C /	°F	°C /	°F
Rtd. Curr. (1)	A		A	
Rtd. Curr. (2)	A		A	
Max input power	kW		kW	

Flygt

ITT Industries

C-3231

Impeller/Motor/Nominal Sizes | Issued: 8/00 | Supersedes: 2/99

PUMP MODEL	IMPELLER CODE	HP RATING CP, CS, CT, CZ	VAC	D1	D2	D3	D4
3231 3Ø	430 HT	160, 185 250, 335	460 575	8"	8"	~~8"~~	~~*10" 12"~~
	455 HT	185 250, 335	460 575				
	630 HT	90, 110	230 460 575				
	655 HT	90, 110	230 460 575				

HT= High Head

* for CZ configuration

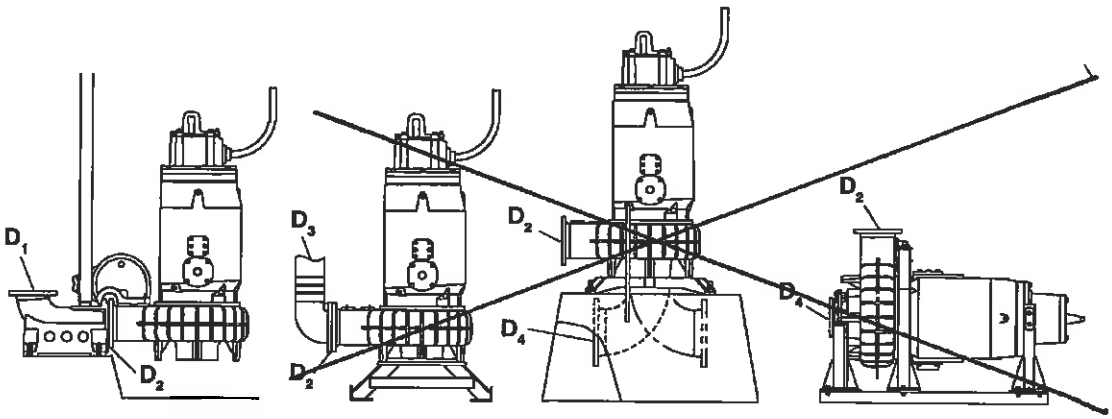

CP CS CT CZ

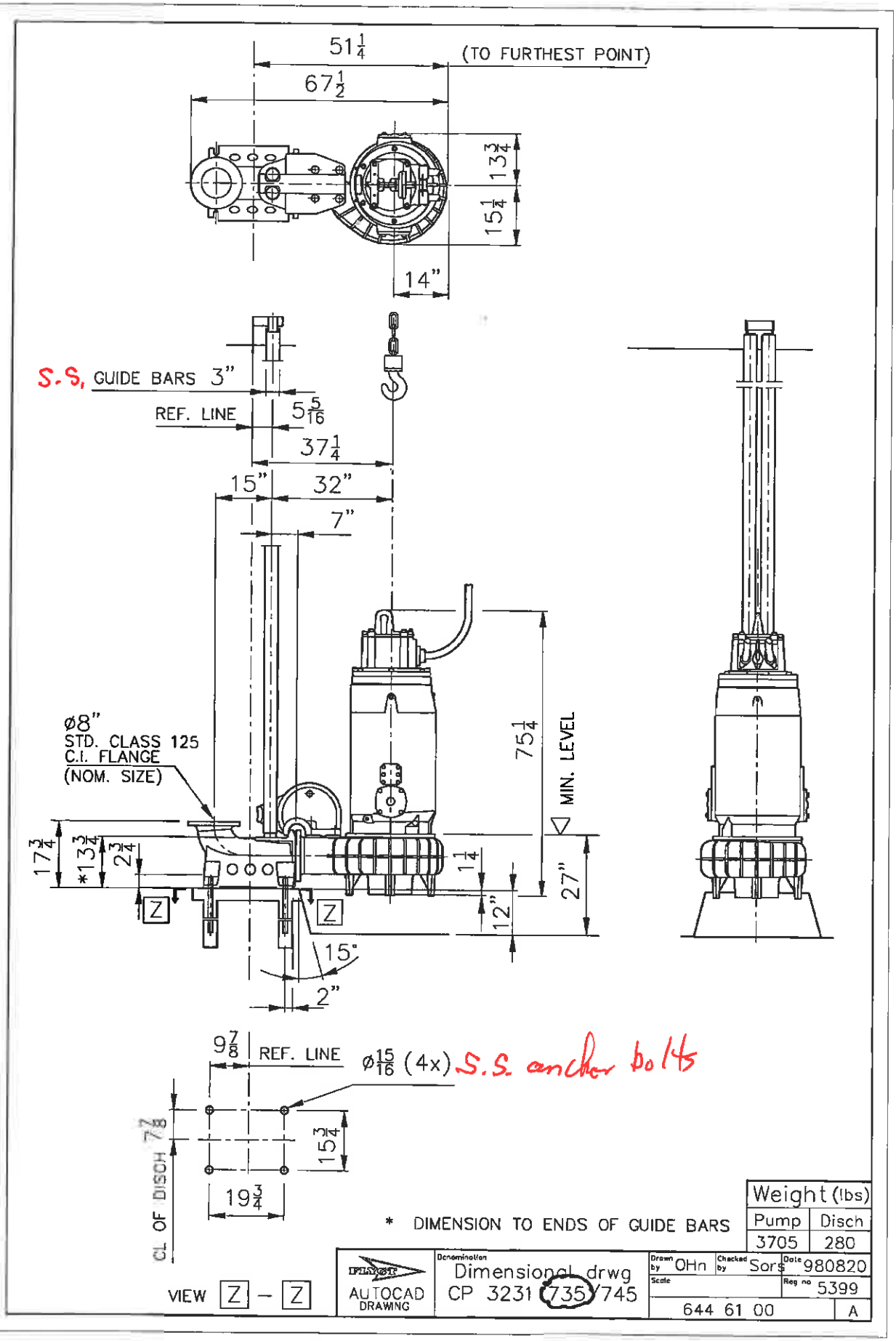
51 1/4
(TO FURTHEST POINT)
67 1/2
13 3/4
15 1/4
14"
S.S. GUIDE BARS 3"
REF. LINE
5 5/16
37 1/4
15"
32"
7"
ø8"
STD. CLASS 125
C.I. FLANGE
(NOM. SIZE)
75 1/4
MIN. LEVEL
17 3/4
*13 3/4
2 3/4
1 1/4
12"
27"
Z
Z
15°
2"
9 7/8
REF. LINE
ø15/16 (4x) S.S. anchor bolts
7 7/8
CL OF DISCH
15 3/4
19 3/4
* DIMENSION TO ENDS OF GUIDE BARS
VIEW Z – Z
Weight (lbs)
Pump
Disch
3705
280
PLANCHET
AUTOCAD DRAWING
Denomination
Dimensional drwg
CP 3231 735/745
Drawn by OHn
Checked by Sors
Date 980820
Scale
Reg no 5399
644 61 00
A

C3231 SPECS.

PUMP DESIGN
The pump(s) shall be automatically and firmly connected to the discharge connection, guided by no less than two parallel guide bars extending from the top of the station to the wet well mounted discharge connection. There shall be no need for personnel to enter the wet-well. Sealing of the pumping unit to the discharge connection shall be accomplished by a machined metal to metal watertight contact. Sealing of the discharge interface with a diaphragm, O-ring or profile gasket will not be acceptable. The entire weight of the pump/motor unit shall be borne by the pump discharge elbow. No portion of the pump/motor unit shall bear on the sump floor directly or on a sump floor mounted stand.

Power and pilot cable supports shall be provided and consist of a wire braid sleeve with attachment loops or tails to connection to the under side of the access frame.

PUMP CONSTRUCTION
Major pump components shall be of gray cast iron, ASTM A-48, Class 35B, with smooth surfaces devoid of blow holes or other casting irregularities. All exposed nuts or bolts shall be AISI type 304 stainless steel. All metal surfaces coming into contact with the pumped media, other than stainless steel, shall be protected by a factory applied spray coating of acrylic dispersion zinc phosphate primer with a polyester resin paint finish on the exterior of the pump.

Sealing design shall incorporate **metal-to-metal contact** between machined surfaces. Pump/Motor unit mating surfaces where watertight sealing is required shall be machined and fitted with Nitrile or Viton rubber O-rings. Joint sealing will be the result of controlled compression of rubber O-rings in two planes and O-ring contact of four sides without the requirement of a specific bolt torque limit. Rectangular cross sectioned rubber, paper or synthetic gaskets that require specific torque limits to achieve compression shall not be considered as adequate or equal. No secondary sealing compounds, elliptical O-rings, grease or other devices shall be used.

COOLING SYSTEM
Each pump/motor unit shall be provided with an integral, self-supplying cooling system. The motor water jacket shall encircle the stator housing and shall be of cast iron, ASTM A-48, Class 35B. The water jacket shall thus provide heat dissipation for the motor regardless of whether the motor unit is submerged in the pumped media or surrounded by air. After passing through a classifying labyrinth, the impeller back vanes shall provide the necessary circulation of the cooling liquid, a portion of the filtered pump media, through the cooling system. Two cooling liquid supply pipes, one discharging low and one discharging high within the jacket, shall supply the cooling liquid to the jacket. An air evacuation tube shall be provided to facilitate air removal from within the jacket. Any piping internal to the cooling system shall be shielded from the cooling media flow allowing for unobstructed circular flow within the jacket about the stator housing. Two cooling liquid return ports shall be provided. The internals to the cooling system shall be non-clogging by virtue of their dimensions. Drilled and threaded provisions for external cooling and, seal flushing or air relief are to be provided. The cooling jacket shall be equipped with two flanged, gasketed and bolted inspection ports of not less than 4"Ø located 180° apart. The cooling system shall provide for continuous submerged or completely non-submerged pump operation in liquid or in air having a temperature of up to 40°C (104°F), in accordance with NEMA standards. Restrictions limiting the ambient or liquid temperatures at levels less than 40°C are not acceptable.

CABLE ENTRY SEAL
The cable entry seal design shall preclude specific torque requirements to insure a watertight and submersible seal. The cable entry shall consist of dual cylindrical elastomer grommets, flanked by washers, all having a close tolerance fit against the cable outside diameter and the cable entry inside diameter. The grommets shall be compressed by the cable entry unit, thus providing a

strain relief function. The assembly shall provide ease of changing the cable when necessary using the same entry seal. **The cable entry junction chamber and motor shall be sealed from each other, which shall isolate the stator housing from foreign material gaining access through the pump top. Epoxies, silicones, or other secondary sealing systems shall not be considered acceptable.**

MOTOR

The pump motor shall be a NEMA B design, induction type with a squirrel cage rotor, shell type design, housed in an air filled, watertight chamber. The stator windings shall be insulated with moisture resistant Class H insulation rated for 180°C (356°F). The stator shall be insulated by the trickle impregnation method using Class H monomer-free polyester resin resulting in a winding fill factor of at least 95%. The motor shall be inverter duty rated in accordance with NEMA MG1, Part 31.The stator shall be heat-shrink fitted into the cast iron stator housing. The use of multiple step dip and bake-type stator insulation process is not acceptable. The use of bolts, pins or other fastening devices requiring penetration of the stator housing is not acceptable. The motor shall be specifically designed for submersible pump usage and designed for continuous duty pumping media of up to 40°C (104°F) with an 80°C temperature rise and capable of at least 15 evenly spaced starts per hour. The rotor bars and short circuit rings shall be made of cast aluminum. Pumps using 9xx series drive units are capable of 8 evenly spaced starts per hour.
Thermal switches shall be embedded in the stator end coils to monitor the temperature of each phase winding. One PT-100 type temperature sensor shall be installed in the stator winding. These thermal switches shall be used in conjunction with and supplemental to external motor overload protection and shall be connected to the control panel. The junction chamber shall be sealed off from the stator housing and shall contain a terminal board for connection of power and pilot sensor cables using threaded compression type terminals. A mechanical float switch (FLS) shall be mounted in the junction chamber to signal if there is water intrusion. A pump memory module shall be provided and mounted in the junction chamber to record pump run time, number of starts as well as contain the motor unit performance and manufacturing data and service history. The use of wire nuts or crimp-type connectors is not acceptable. The motor and the pump shall be produced by the same manufacturer.

The combined service factor (combined effect of voltage, frequency and specific gravity) shall be a minimum of 1.15. The motor shall have a voltage tolerance of plus or minus 10%. The motor shall be designed for operation up to 40°C (104°F) ambient and with a temperature rise not to exceed 80°C. A performance chart shall be provided upon request showing curves for torque, current, power factor, input/output kW and efficiency. This chart shall also include data on starting and no-load characteristics.
The power cable shall be sized according to the NEC and ICEA standards and shall be of sufficient length to reach the junction box without the need of any splices. The outer jacket of the cable shall be oil resistant chlorinated polyethylene rubber. The motor and cable shall be capable of continuous submergence underwater without loss of watertight integrity to a depth of 65 feet or greater.

The motor horsepower shall be adequate so that the pump is non-overloading throughout the entire pump performance curve from shut-off through run-out.

PILOT CABLE

The pilot cable shall be designed specifically for use with submersible pumps and shall be type SUBCAB (SUBmersible CABle). The cable shall be multi-conductor type with stainless steel braided shielding, a chlorinated polyethylene rubber outer jacket and tinned copper conductors insulated with ethylene-propylene rubber. The conductors shall be arranged in twisted pairs. The cable shall be rated for 600 Volts and 90°C (194°F) with a 40°C (104°F) ambient temperature and shall be approved by Factory Mutual (FM). The cable length shall be adequate to reach the junction box without the need for splices.

BEARINGS
The pump shaft shall rotate on at least three grease-lubricated bearings. The upper bearing, provided for radial forces, shall be a single roller bearing. The lower bearings shall consist of at least one roller bearing for radial forces and one or two angular contact ball bearings for axial thrust.

The minimum L_{10} bearing life shall be 100,000 hours at any point along the usable portion of the pump curve at maximum product speed.

The lower bearing housing shall include an independent thermal sensor to monitor the bearing temperature. If a high temperature occurs, the sensor shall activate an alarm and shut the pump down.

MECHANICAL SEAL
Each pump shall be provided with a tandem mechanical shaft seal system consisting of two totally independent seal assemblies. The lower seal shall be independent of the impeller hub. The seals shall operate in an lubricant reservoir that hydrodynamically lubricates the lapped seal faces at a constant rate. The lower, primary seal unit, located between the pump and the lubricant chamber, shall contain one stationary and one positively driven rotating corrosion resistant **tungsten-carbide** seal ring. The upper, secondary seal unit, located between the lubricant chamber and the motor housing, shall contain one stationary and one positively driven rotating corrosion resistant **tungsten-carbide** seal ring. Each seal interface shall be held in contact by its own spring system. The seals shall require neither maintenance or adjustment and shall be capable of operating in either clockwise or counter clockwise direction of rotation without damage or loss of seal. For special applications, other seal face materials shall be available.

Should both seals fail and allow fluid to enter the stator housing, a port shall be provided to direct that fluid immediately to the stator float switch to shut down the pump and activate an alarm. Any intrusion of fluid shall not come into contact with the lower bearings.

The following seal types shall not be considered acceptable nor equal to the dual independent seal specified: shaft seals without positively driven rotating members, or conventional double mechanical seals containing either a common single or double spring acting between the upper and lower seal faces. No system requiring a pressure differential to offset pressure and to effect sealing shall be used.

Each pump shall be provided with an lubricant chamber for the shaft sealing system. The lubricant chamber shall be designed to prevent overfilling and to provide lubricant expansion capacity. The drain and inspection plug, with positive anti-leak seal shall be easily accessible from the outside. The seal system shall not rely upon the pumped media for lubrication. **The motor shall be able to operate continuously while non-submerged without damage while pumping under load.**

Seal lubricant shall be FDA Approved, nontoxic.

PUMP SHAFT
Pump and motor shaft shall be a solid continuous shaft. The pump shaft is an extension of the motor shaft. Couplings shall not be acceptable. The pump shaft shall be of carbon steel ASTM A 572 and shall be completely isolated from the pumped liquid. Shaft material on 6x5 and 7x5 drive units shall be stainless steel – ASTM A479 S43100-T.

IMPELLER
The impeller(s) shall be of gray cast iron, Class 35B, dynamically balanced, multiple vaned, double shrouded non-clogging design having long throughlets without acute turns. The impeller(s) shall be capable of handling solids, fibrous materials, heavy sludge and other matter found in wastewater. Impeller(s) shall be keyed to the shaft, retained with an expansion ring and shall be

capable of passing a minimum 3.5 inch diameter solid. All impellers shall be coated with an acrylic dispersion zinc phosphate primer.

WEAR RINGS
A wear ring system shall be used to provide efficient sealing between the volute and suction inlet of the impeller. Each pump shall be equipped with a Nitrile rubber coated steel or brass ring insert that is drive fitted to the volute inlet.

This pump shall also have a stainless steel impeller wear ring heat-shrink fitted onto the suction inlet of the impeller.

VOLUTE
Pump volute(s) shall be single-piece gray cast iron, Class 35B, non-concentric design with smooth passages large enough to pass any solids that may enter the impeller. Minimum inlet and discharge size shall be as specified.

PROTECTION
All stators shall incorporate three thermal switches, connected in series, to provide over temperature protection of the motor winding. Should high temperature occur, the thermal switches shall open, stop the motor and activate an alarm. The stator shall also include one PT-100 type temperature probe to provide for monitoring of the stator temperature

A lower bearing temperature sensor shall be provided. The sensor shall directly contact the outer race of the thrust bearing providing for accurate temperature monitoring.

Two leakage sensors shall be provided to detect water intrusion into the stator chamber and junction chamber. A Float Leakage Sensor (FLS), a small float switch, shall be used to detect the presence of water in either the stator chamber or junction chamber. When activated, the FLS will stop the motor and activate an alarm. **USE OF VOLTAGE SENSITIVE SOLID STATE SENSORS SHALL NOT BE ALLOWED.**

The solid-state pump memory unit, three thermal switches, two FLS switches, PT-100 stator temperature monitor and the lower bearing PT-100 temperature monitor shall all be connected to a MAS (Monitoring and Status) monitoring unit. The MAS shall be designed to be mounted in the control panel and shall come with an Operator Panel that is dead-front panel mounted. The Operator Panel shall have soft-touch operator keys and provide local indication of the status of the alarms within the connected pump unit by means of an LCD screen read-out. Local MAS system change shall be made by use of the soft-touch keypad or local connection by means of a laptop computer. Remote indication of pump unit status shall be possible with connection to customer PLC or via LAN.

Standard CP/NP Discharge Connections (Cast Iron)

Dimensions

Accessories | Issued: 6/06 | Supersedes: 11/04

All dimensions (inches)

Pump Model	Part Number	Disch. Inlet	Disch. Outlet	A	B	C	D	E	F	G	H	I	J	K
8" - 3102, 3127, 3152, 3170, 3201, 3300.	444 71 05	6"	8"	16 3/4	11	10	12 3/16	15	17 3/4	10 1/8	4 9/16	22.5°	45° x 8	11 3/4
8" - 3153, 3171, 3201, 3202 3300.	374 76 06	8"	8"	16 3/4	11	10	12 3/16	15 3/8	17 3/4	10 1/4	4 9/16	22.5°	45° x 8	11 3/4
8" - 3231	388 24 06	8"	8"	21 5/8	19 3/4	15 3/4	19 3/4	23 5/8	17 3/4	8 7/8	6 7/8	22.5°	45° x 8	11 3/4
8" - 3240	695 77 06	8"	8"	21 5/8	19 3/4	15 3/4	19 3/4	23 5/8	17 3/4	9 1/8	6 7/8	22.5°	45° x 8	11 3/4
10" - 3201.	444 73 05	8"	10"	18 3/4	19 3/4	10	12 3/16	24	17 3/4	8 7/8	4 9/16	15°	30° x 12	14 1/4
10" - 3152, 3153, 3170, 3171, 3301.	604 59 05	10"	10"	18 3/4	19 3/4	10	12 3/16	24 3/4	18 3/4	10	4 9/16	15°	30° x 12	14 1/4
12" - 3152, 3170, 3300.	481 75 05	10"	12"	21 3/4	19 3/4	19 3/4	24 7/16	25 5/8	31 1/2	19 11/16	4 9/16	15°	30° x 12	17
12" - 3201, 3202, 3301.	604 61 05	12"	12"	21 5/8	19 3/4	20 3/4	24 7/16	28	31 1/2	20 1/16	4 9/16	15°	30° x 12	17
12" - 3306, 3312.	373 92 05	12"	12"	24 5/8	25 5/8	23 3/4	27 9/16	29 1/2	23 3/4	10 13/16	6 7/8	15°	30° x 12	17
14" - 3201, 3300.	320 15 05	12"	14"	22 5/8	19 3/4	19 3/4	24 7/16	25 5/8	33 1/2	19 11/16	4 9/16	15°	30° x 12	18 3/4
14" - 3301, 3356.	388 27 05	14"	14"	25 5/8	25 5/8	23 3/4	27 9/16	29 1/2	23 3/4	11 13/16	6 7/8	15°	30° x 12	18 3/4
14" - 3306, 3312.	442 16 05	12"	14"	25 5/8	25 5/8	23 3/4	27 9/16	29 1/2	23 3/4	11 13/16	6 7/8	15°	30° x 12	18 3/4
14" - 3351	557 00 05	14"	14"	27 9/16	31 1/2	27 3/4	31 1/2	35 7/16	23 3/4	11 13/16	8 7/8	15°	30° x 12	18 3/4
16" - 3400	581 98 05	16"	16"	29 9/16	31 1/2	31 1/2	35 7/16	31 1/2	29	13 3/4	8 13/16	11.25°	22.5° x 16	21 1/4
20" - 3501, 3531.	387 96 05	20"	20"	30 5/8	31 1/2	27 3/4	31 1/2	35 1/2	33	15 3/8	8 7/8	9°	18° x 20	25
24" - 3602	388 65 05	24"	24"	33	35 1/2	31 1/2	35 7/16	39 3/8	37 1/2	17 3/4	8 7/8	9°	18° x 20	29 1/2
32" - 3800	586 03 05	32"	32"	40 1/4	26 5/8	47 1/4	51 1/4	57 1/4	47 1/2	21 3/4	9 3/4	6.43°	12.86° x 28	38 1/2

Note: Alternative discharge connections may be available, contact Flygt Application Engineering.

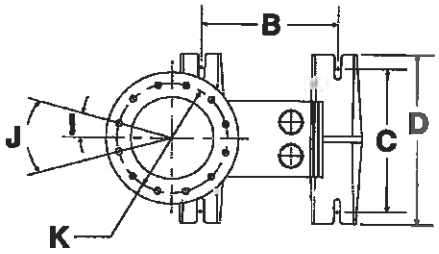

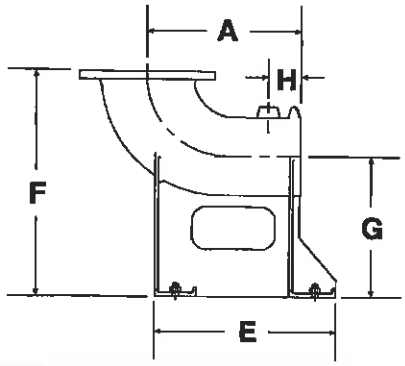

Note:
The discharge connection shown here is typical in appearence for most pumps.

Flygt Monitoring Devices

MAS 711

Controls	Issued: 10/04	Supersedes:

MAS 711 is a pump monitoring system designed to remember, record and present pump events fast and easily. As part of a complete Flygt pumping system, it helps reduce costs over the pump's lifetime by facilitating maintenance and assuring safe operation, thereby increasing reliability and availability.

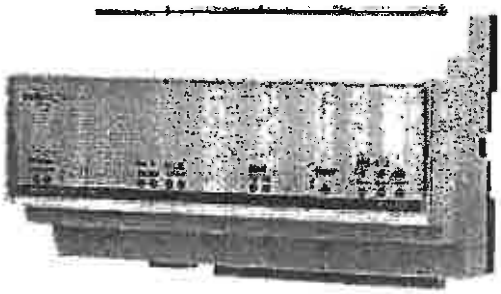

Detailed operation data can be accessed via MAS 711 for immediate analysis using a standard web browser on a PC (no special software required), or alternatively transferred to a higher level system such as a SCADA (Supervision Control and Data Acquisition) system.

Everything you need to know
MAS 711 monitors the pump's temperature, leakage, vibration, current and power (optional). In addition, it has a 'black box' function in case of pump failure.

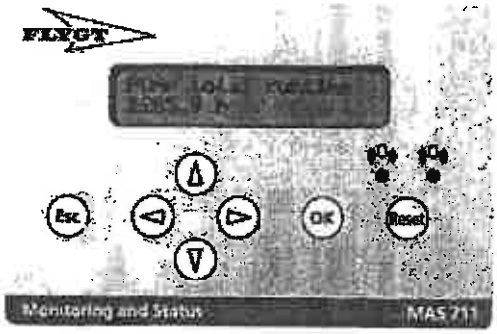

- **'Plug-n-play' with back-up**
MAS 711 communicates with the pump's memory for fast and easy, 'plug-n-play' installation and routine back-up/synchronization of operation data and settings.

- **Communication options**
With its ethernet, Modbus and modem communications ports, MAS 711 can communicate with most Supervision Control and Data Acquisition (SCADA) systems on the market.

With the many functions and features of MAS 711, you have Flygt's decades of knowledge and experience in monitoring and control of submersible pumps literally at your fingertips.

Wiring of Base unit

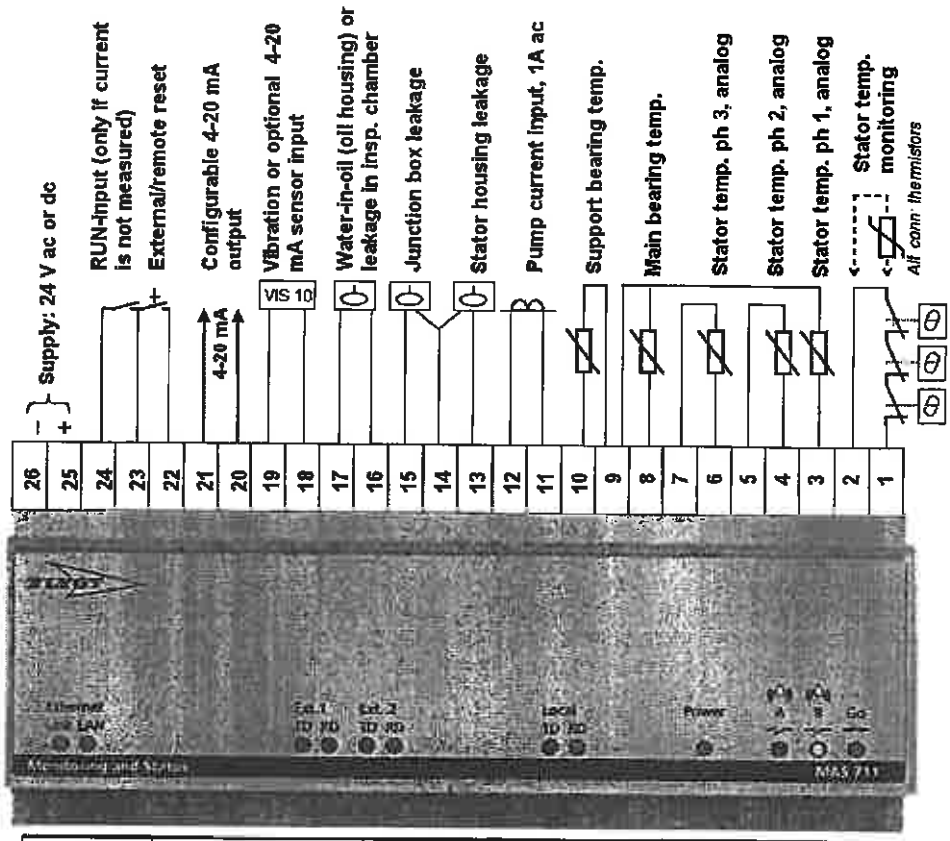

PUMP/MOTOR PROTECTION
All of the pump/motor unit protective and monitoring sensors shall be connected to a MAS, (Monitoring and Status) module. Each pump/motor unit shall be equipped with a MAS unit. The MAS shall be a two-piece product including the base module and an operator panel.

The operator panel shall be mounted on the dead-front panel. The operator panel shall include soft-touch type navigation keypad, alarm acknowledgement keypad, amber warning lamp, red alarm lamp and a 2-line by 20-character LCD digital display. The digital display shall provide the local readout of pump/motor sensor and alarm status and aid in navigation through the system during set-up.

The base module shall contain a processor unit having a minimum of 2Mb of memory for the logging of measurements and alarm events, two communications ports, sufficient terminals for pump/motor unit sensor connection and a Web tool. The Web tool shall be able to be accessed in the following manners; directly connected at the site with a personal computer, remotely accessed over the owner's LAN or internet or by the use of a telephone modem.

Base System Sensors
Each pump/motor unit(s) shall be equipped with the following Base Level protection and monitoring sensors:

1. Three (3) motor winding thermal switches, one installed in each motor phase winding, and connected in series to monitor and protect the winding from over temperature operation. The thermal switches shall open, activating an alarm and stopping the motor should a high temperature event occur.
2. One (1) PT-100 temperature probe shall be installed in the motor winding to provide direct stator temperature read-out.
3. One (1) PT-100 temperature probe shall be installed to directly contact the outer race of the thrust bearing to provide for accurate temperature monitoring of the bearing.
4. One (1) Float-type Leakage Sensor (FLS) shall be provided to detect water intrusion into the motor stator chamber. If activated, the FLS will activate an alarm and stop the motor.
5. One (1) Float-type Leakage Sensor (FLS) shall be provided to detect water intrusion into the power cable junction chamber of the pump/motor unit. If activated, the FLS will activate an alarm and stop the motor.
6. One (1) Pump Memory unit shall be installed in the cable junction chamber of the pump/motor unit. The Pump Memory with 32kb of memory shall store unit data plate information, listing of pump/motor unit installed sensors and statistical operational data including number of starts, unit accumulated running time, unit service data and histogram data of motor temperature.

Optional System Sensors
Each pump/motor unit(s) can be further equipped with each of the following Optional sensors in addition to the Basic Level sensors listed above:

1. Three (3) PT-100 temperature probes, one installed in each motor stator phase winding, to provide direct stator temperature read-out of each phase winding.
2. One (1) PT-100 temperature probe shall be installed to directly contact the outer race of the upper support bearing to provide for accurate temperature monitoring of the bearing.
3. One (1) VIS-10 vibration sensor shall be installed in the power cable junction chamber of the pump/motor unit. The vibration sensor shall be capable of monitoring displacement in one plane.
4. One (1) CLS-10 water-in-oil sensor installed in the mechanical seal lubrication chamber to alarm should there be intrusion of water into the chamber.
5. One (1) Power Analyzer module. The Power analyzer shall provide additional input channels to monitor the following:
   a. System pump/motor current
   b. Individual phase pump/motor current (each of 3-phases)
   c. Current imbalance
   d. System voltage
   e. Individual line voltage (each of 3-lines)
   f. Voltage imbalance
   g. System power
   h. Power factor
   i. Energy consumption

Flygt Monitoring Devices

Leakage Sensors

Controls | Issued: 6/94 | Supersedes: 6/90

Select Flygt pumps are available with leakage sensors for sensing the presence of water in the oil and/or stator housing. A plate in the junction box indicates that the pump is equipped with sensors.

The FLS sensor is a miniature float switch for the detection of water and/or oil in the stator housing. Due to its design, it is meant to be used for pumps that will be oriented in the standard vertical position. The FLS sensor is mounted in the bottom of the stator housing. The FLS is the only sensor that can be used for intrinsically safe designs which is required for explosion-proof installations.

The FLS is connected to the MiniCAS (Control and Status) monitoring unit. The FLS is wired in series with the thermal switches, thus, eliminating additional control leads. The MiniCAS unit monitors the current allowable to flow from both the temperature switches and FLS sensor. On the front of the MiniCAS there are two indication lamps, one for supply and temperature and one for leakage. Only two wires are needed between the pump and the MiniCAS.

The CLS-30 is a capacitive type leakage sensor for the detection of water in the oil casing. This sensor actuates an alarm when the oil contains 30% water. The CLS-30 sensor is mounted in the bearing cage and sticks into the oil casing. The FLS and CLS sensors can be used together in the same pump, connected in parallel. The parallel connected sensors are then connected in series with the thermal switches and finally connected to the MiniCAS unit.

A typical connection of FLS and CLS sensors to a MiniCAS is shown below.

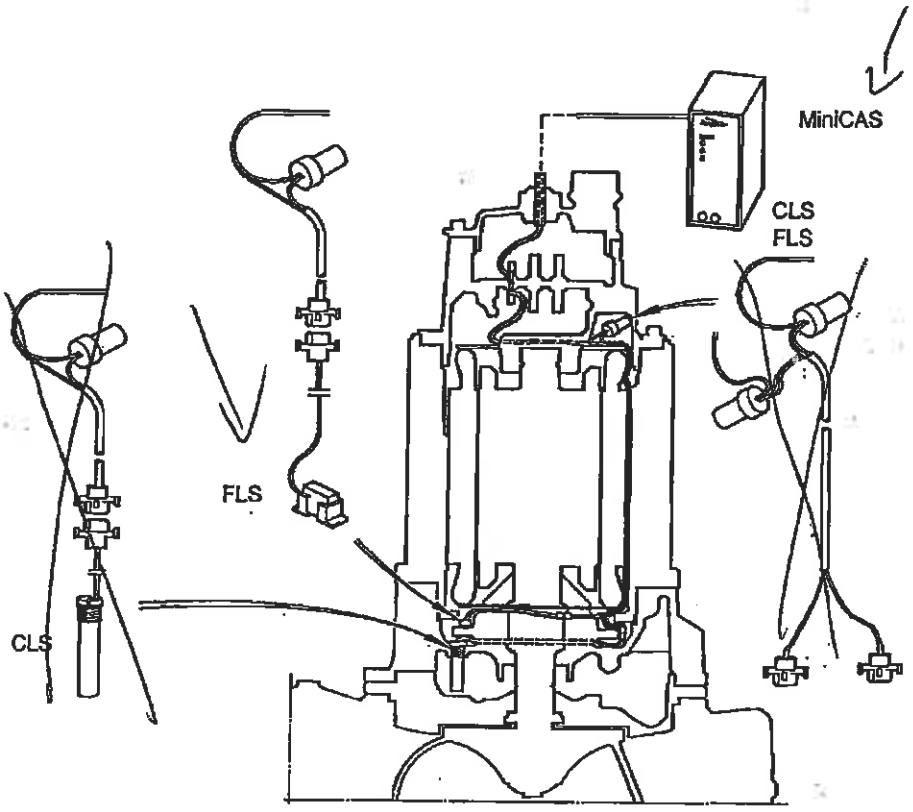

Flygt Monitoring Devices

MiniCAS

Description:

The MiniCAS modules are relays especially designed by Flygt to simultaneously supervise pump motor thermal switches and Flygt pump leakage detectors FLS (Stator housing) and/or CLS (Water-in-oil) installed in each small to medium Flygt pump (Models 3085 through 3300) or mixer (Series 4600).

The MiniCAS is using only two wires for two or more sensors connected in series and actually includes two current sensitive mini-relays. The principle of operation is: a 12 VDC voltage is sent to the pump sensors and the current through the input circuit is fed through the current mini-relays. One mini-relay is an overcurrent relay, the other is an undercurrent relay.

- If a normally closed thermal switch, installed into the stator winding, opens due to overheating, or one of the connecting leads is broken, the undercurrent relay will de-energize, changing its contacts status. The MiniCAS will shut down the pump.

- If the leakage sensor (FLS or CLS) is activated, the current through the sensor will increase and the overcurrent relay will be energized, changing the status of its contacts. The MiniCAS will send a "Leakage" signal or shut down the pump, depending on the MiniCAS external connections.

Flygt offers MiniCAS relays in two interchangeable variants:

- MiniCAS II with external manual reset after an overtemperature tripping.

- MiniCAS II/FUS with a "Manual/Auto Reset" selector switch, which allows the pump to restart in "Auto Reset" position after the stator cools down and the thermal switches re-close. (See Technical Data next page)

MiniCAS II - Technical Data:

Operation Principle:	Current sensing
Environment:	0-50°C (32-123°F) max 90% RH
Supply Voltages:	20-30 VAC 50-60 Hz, or 120VAC 50-60 Hz
Relay Contact Rating:	8 Amps @ 250 VAC
Voltage to Sensor:	12 VDC ±5%
Values of Operation:	3 mA<I<22 mA = OK conditions. I<3 mA = High temp. (or broken wire). I>22 mA = Leakage (or short circuit). (I = DC current measured by the MiniCAS II).
LED Indicators:	Yellow LED: for Supply Voltage presence indication. Red LED: for Overtemperature indication. Red LED: for Leakage indication.
Reset:	Manual - for Overtemperature by interrupting power supply or pushing external push-button (NO), connected between terminals 6 and 2 (not supplied with the unit). Automatic - for Leakage
Physical Size:	Width: 33mm (1.33") Height: 79mm (3.11") Depth: 75mm (2.95")
Part Number:	83 58 57 (MiniCAS II - 24V) 40-50 10 98 (MiniCAS II - 120V) 14-40 70 97 (Socket) - optional

Flygt Monitoring Devices

MiniCAS II FUS 24VAC and 120/24VAC Technical Data

MiniCAS II/FUS 24V - Technical Data:

Operation Principle:	Current sensing
Environment:	0-50°C (32-123°F), max 90% RH
Supply Voltage:	24 VAC 50-60 Hz ±15%
Relay Contact Rating:	16 Amps @ 277 VAC
Voltage to Sensor:	12 VDC ±10%
Values of Operation:	7.0 mA<I<30 mA = OK conditions. I<7.0 mA = High temp. (or interrupt). I>30.0 mA = Leakage (or short circuit). (I = current measured by the MiniCAS II/FUS).

Leakage

Contact:	Form "C" 16 A @ 277 VAC (N.C. contact for interlocking)
Reset:	Automatic (N.O. contact for alarm)
LED Indicators:	Red LED On = Leakage indicated Red LED Off = No leakage indicated

Temperature

Contact:	Form "C" 16 A @ 277 VAC (N.C. contact for interlocking, N.O. contact for alarm)
Reset:	Manual - by interrupting the supply for 1 sec. or by setting the toggle switch in the "Manual" mode. Automatic - by setting the toggle switch in the "Auto Reset" mode.
LED Indicators:	Green LED On = Supply Voltage is 'On' **and** no Over-temperature present. Green LED Off = Overtemperature is present **or** no Supply Voltage indicated.
Physical Size:	Width: 1.75" Height: 2.36" Depth: 3.575"
Part Number:	14-40 71 13 (MiniCAS II/FUS 24VAC) 14-40 70 97 (Socket, 11-pin) - optional 14-40 71 29 (MiniCAS II/FUS 120/24VAC) 14-40 70 97 (Socket, 11-pin) - optional
Approvals:	UL - File E132545

Flygt Monitoring Devices

Wiring Diagram MiniCAS II FUS - 120/24VAC

Controls	Issued: 4/05	Supersedes: 11/04

Wiring Diagram (MiniCAS II FUS - 120/24VAC)

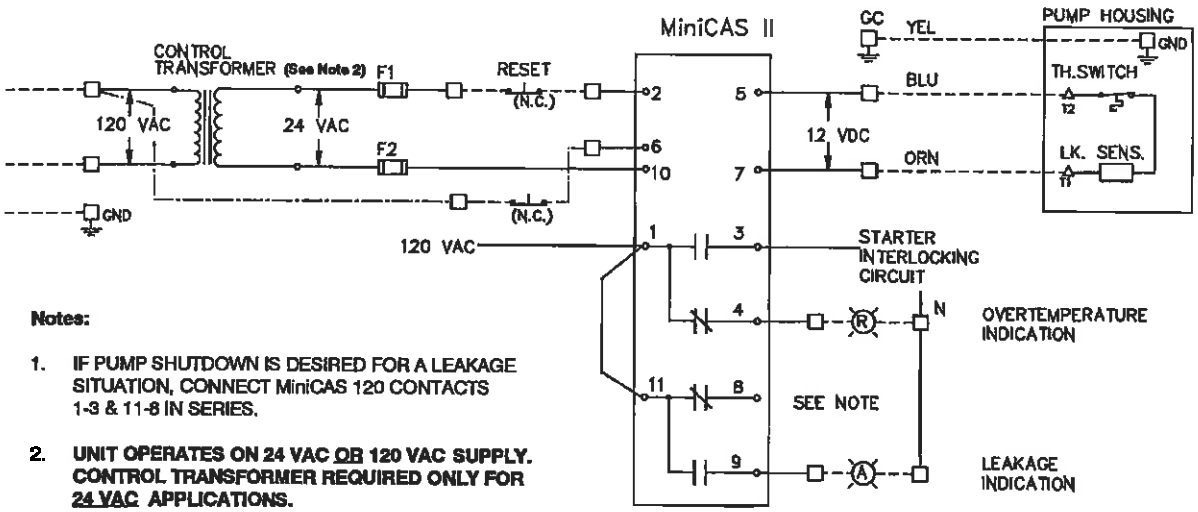

Notes:

1. IF PUMP SHUTDOWN IS DESIRED FOR A LEAKAGE SITUATION, CONNECT MiniCAS 120 CONTACTS 1-3 & 11-8 IN SERIES.
2. **UNIT OPERATES ON 24 VAC OR 120 VAC SUPPLY. CONTROL TRANSFORMER REQUIRED ONLY FOR 24 VAC APPLICATIONS.**

Mode of Operation

In normal conditions, when the MiniCAS - 120 is powered, the yellow LED is 'ON' and the relay contact status is as follows:

- Overtemperature relay contacts: 1-3 closed, 1-4 open;
- Leakage relay contacts: 11-8 closed, 11-9 open.

If an overtemperature condition occurs, the unit will turn the pump off and lock it out.
Relay contact status:

- Overtemperature relay contacts: 1-3 open, 1-4 closed;
- Leakage relay contacts: 11-8 closed, 11-9 open.

The power to the pump can be restored after the stator temperature has decreased to a point of safe operation and the thermal switches are closed. The MiniCAS 120 can be reset either manually or automatically.

Note:
When selecting the "Automatic Reset" mode, the control panel should include a latching type circuit for overtemperature alarm display. This circuit will retain the information that an overtemperature situation has occurred and the operator should check the possible cause for motor overtemperature.

If a leakage is detected, after a 5 sec. delay an alarm will be activated or the pump will be shut down. Relay contact status:

- Overtemperature relay contacts: 1-3 closed, 1-4 open;
- Leakage relay contacts: 11-8 open, 11-9 closed.

Once the leakage condition is removed, power is restored to the pump automatically.

Flygt Monitoring Devices

MiniCAS Specifications

Controls	Issued: 3/04	Supersedes: 6/96

Furnish and install one Flygt MiniCAS (Mini Control and Status) module to monitor the temperature and leakage detectors installed in each Flygt pump or mixer. The MiniCAS shall be capable of monitoring the thermal switches embedded in the stator end coils, the FLS (float switch type) water-in-stator-housing sensor, and the CLS (capacitive type) water-in-oil sensor. The MiniCAS shall monitor both the series connected thermal switches and leakage sensor(s) by outputting 12 VDC on a single two wire circuit. When both CLS and FLS leakage sensors are specified they shall be connected in parallel with each other and then in series with the thermal switches.

The MiniCAS circuitry shall operate on the current sensing principle whereby a change in temperature or leakage condition shall change the resistance of the associated sensor and thus alter the current in the sensing circuit. The MiniCAS shall contain two sets of form C dry contacts, one for overtemperature and one for leakage.

The dry contacts shall change status upon occurrence of an over temperature or leakage condition so as to indicate that condition to other control components in the pump control panel. In the case of an overtemperature, and in keeping with Flygt's warranty policy, the overtemperature dry contacts shall be used to trip the pump off line. The MiniCAS shall be designed to be plugged into a standard 11-pin circular socket. Detailed technical data and wiring connections shall be found in the MiniCAS Manual.

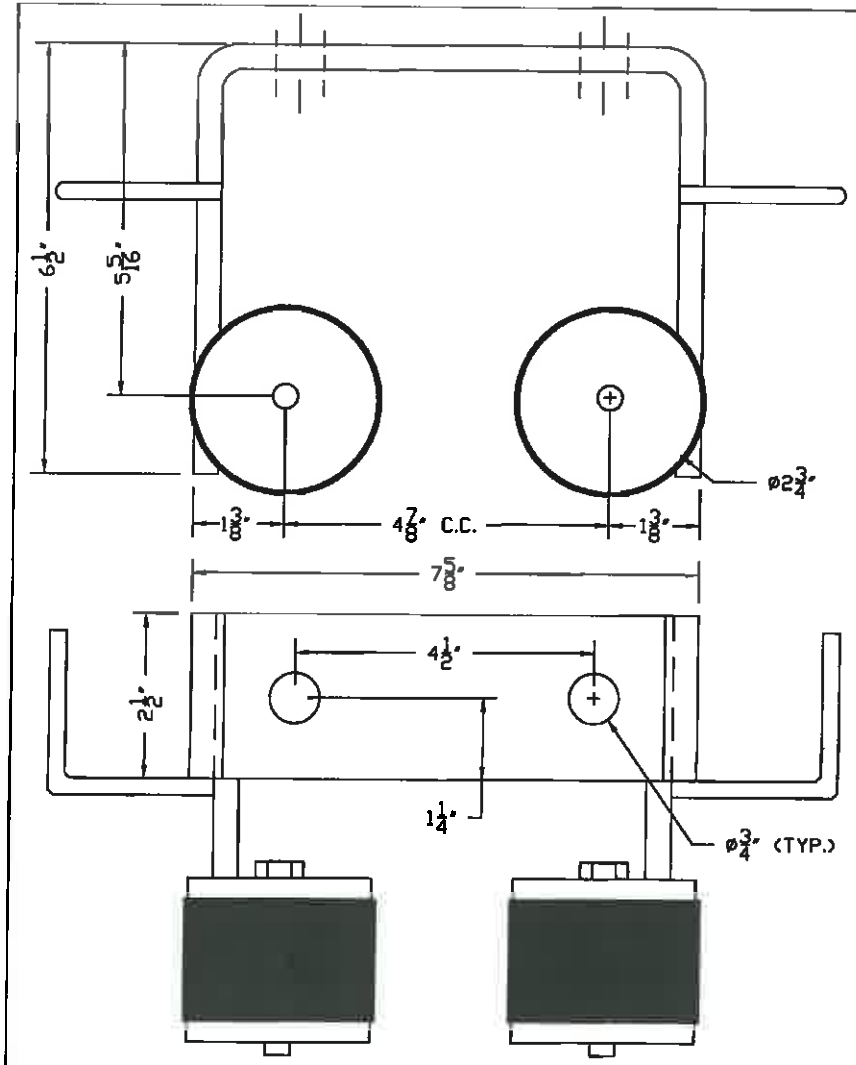

NOTES:

1.) STAINLESS STEEL UNITS SHALL BE GRADE 304 OR GRADE 316 STAINLESS STEEL, PER NOTE 5.

~~2.) FOR GALVANIZED UNITS, ALL OTHER MATERIAL SHALL BE HOT ROLLED STEEL CONFORMING TO A.S.T.M. A-36.~~

~~3.) GALVANIZED UNITS SHALL BE HOT DIP GALVANIZED PER A.S.T.M. 123.~~

4.) PLEASE SPECIFIY REQUIRED MATERIAL:

_____ GALVANIZED (F-UGRB-GALV-3")

_____X_____ 304 STAINLESS STEEL (F-UGRB-304SS-3")

_____ 316 STAINLESS STEEL (F-UGRB-316SS-3")

5) use 304 S.S. anchors

NO.	REVISION	BY	DATE	APVD.	DATE

	BY	DATE
DRAWN	ARD	05/16/03
CHKR.		
PROJ. ENGR.		
APVD.		

ACAD R14

FLYGT

ITT FLYGT CORPORATION, TRUMBULL, CONNECTICUT 06611

THIS DOCUMENT IS THE PROPRIETARY PROPERTY OF ITT FLYGT CORP. IT HAS BEEN FURNISHED UPON THE CONDITION THAT IT SHALL NOT BE RELEASED, DUPLICATED, USED, OR DISCLOSED IN WHOLE OR IN PART FOR ANY PURPOSE WITHOUT THE EXPRESS WRITTEN PERMISSION OF ITT FLYGT AND SHALL BE CONSIDERED CONFIDENTIAL INFORMATION.

#3195901

3" UPPER GUIDERAIL BRACKET

REF. FUGRB-3

SCALE PLOT TO FIT

NUMBER

REV.

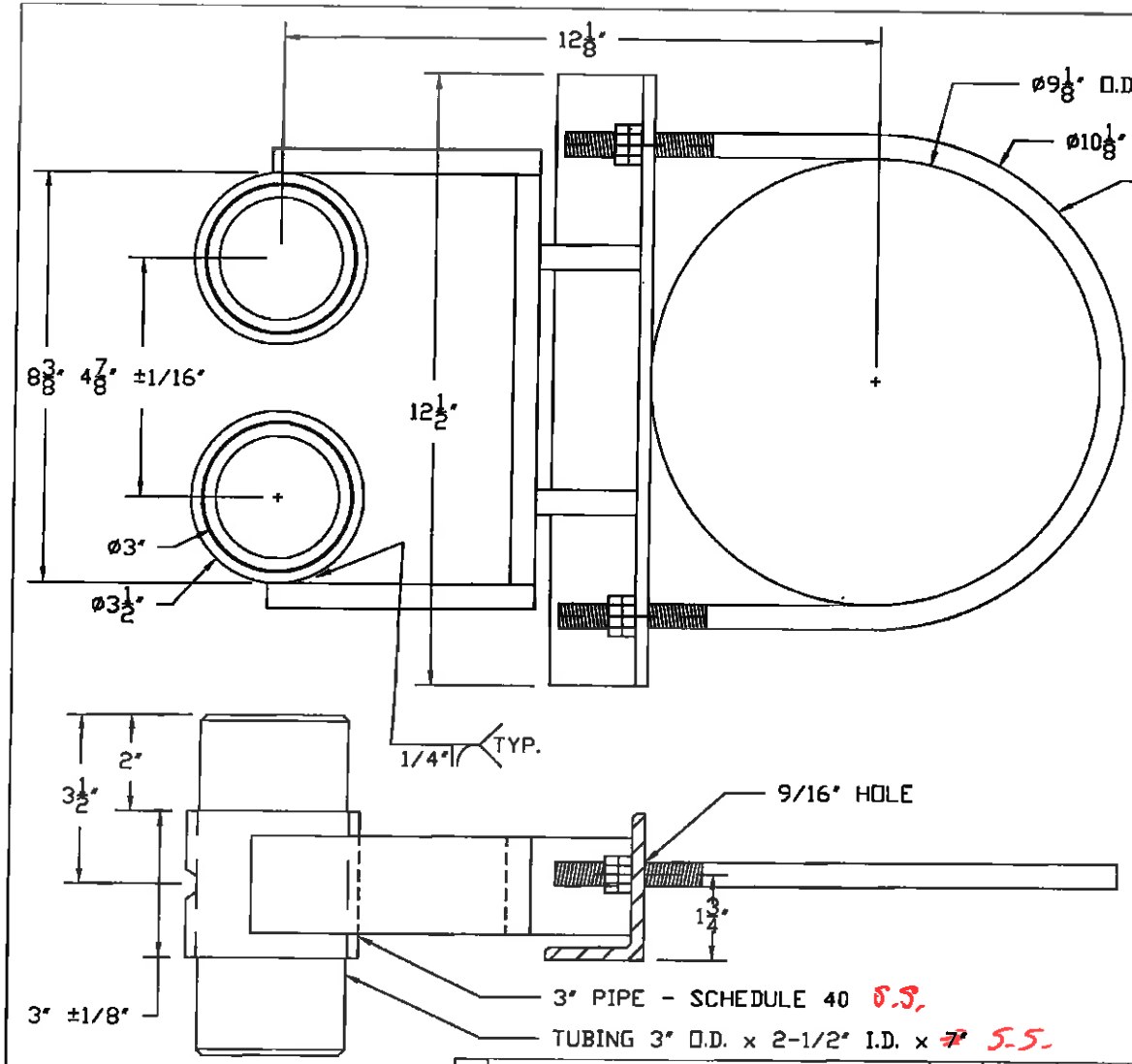

NOTES:

1.) U-BOLT & NUTS SHALL BE STAINLESS STEEL.

2.) STAINLESS STEEL UNITS SHALL BE GRADE 304 OR GRADE 316 STAINLESS STEEL, PER NOTE 6.

3.) ~~FOR PAINTED AND GALVANIZED UNITS, ALL OTHER MATERIAL SHALL BE HOT ROLLED STEEL CONFORMING TO A.S.T.M. A-36.~~

4.) ~~GALVANIZED UNITS SHALL BE HOT DIP GALVANIZED PER A.S.T.M. 123.~~

5.) ~~PAINTED UNITS SHALL BE PAINTED WITH ONE COAT BLACK PAINT.~~

6.) PLEASE SPECIFY REQUIRED MATERIAL:

_____ GALVANIZED (F-IGRB-GALV-3x8-DIP)

_____ PAINTED (F-IGRB-PTD-3x8-DIP)

_X_ 304 STAINLESS STEEL (F-IGRB-304SS-3x8-DIP)

_____ 316 STAINLESS STEEL (F-IGRB-316SS-3x8-DIP)

FLYGT

ITT FLYGT CORPORATION, TRUMBULL, CONNECTICUT 06611

THIS DOCUMENT IS THE PROPRIETARY PROPERTY OF ITT FLYGT CORP. IT HAS BEEN FURNISHED UPON THE CONDITION THAT IT SHALL NOT BE RELEASED, DUPLICATED, USED, OR DISCLOSED IN WHOLE OR IN PART FOR ANY PURPOSE WITHOUT THE EXPRESS WRITTEN PERMISSION OF ITT FLYGT AND SHALL BE CONSIDERED CONFIDENTIAL INFORMATION.

	BY	DATE
DRAWN	ARD	05/16/03
CHKR.		
PROJ. ENGR.		
APVD.		

3" x 8"
INTERMEDIATE GUIDERAIL BRACKET
PART # F-IGRB-3x8-DIP

REF. F-IGRB-3x8-DIP
SCALE PLOT TO FIT
NUMBER
REV.

NO.	REVISION	BY	DATE	APVD.	DATE

ACAD R14

SERIES J4A CABLE HOLDER

STANDARD FEATURES:

- TYPE-304 STAINLESS STEEL CONSTRUCTION
- 6 HOOKS STANDARD – FOR FLOAT SWITCHES
- AVAILABLE IN TYPE-316 STAINLESS STEEL

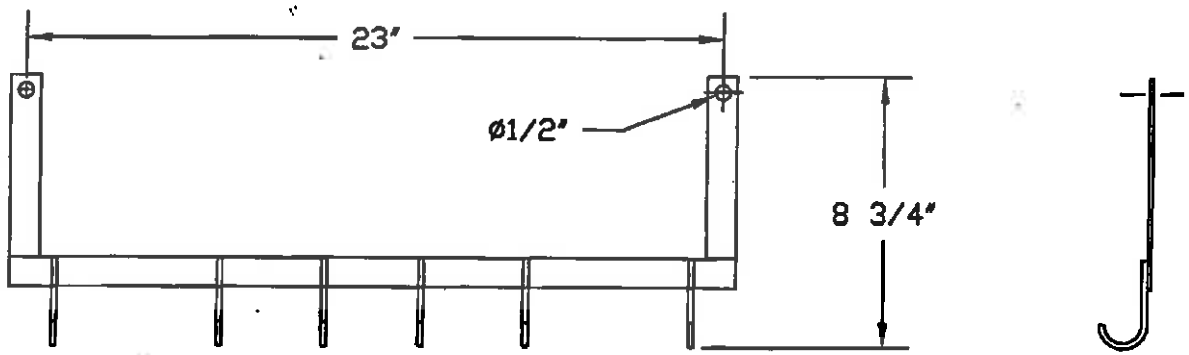

Support Grips

Heavy Duty Support

Double Eye, Double Weave,

IMPORTANT!
It is important that you read all breaking strength, safety and technical data relating to this product on pages T-43 through T-48.

Double Eye, Closed Mesh*

For permanent support when cable end is not available to be installed through grip.

Cable Diameter Range Inches (cm)	Approx. Breaking Strength Lbs. (N)	E Inches (cm)	M Inches (cm)	Catalog Numbers
.75"- .99"(1.90-2.51)	2,820 (12,543)	10" (25.40)	25" (63.50)	02206001
1.00"-1.24" (2.54-3.15)	4,280 (19,037)	10" (25.40)	28" (71.12)	02206002
1.25"-1.49" (3.17-3.78)	4,280 (19,037)	10" (25.40)	30" (76.20)	02206003
1.50"-1.99" (3.81-5.05)	4,280 (19,037)	10" (25.40)	34" (86.36)	02206004
2.00"-2.49" (5.08-6.32)	8,050 (35,806)	12" (30.48)	36" (91.44)	02206005
2.50"-2.99" (6.35-7.59)	8,050 (35,806)	12" (30.48)	38" (96.52)	02206006
3.00"-3.49" (7.62-8.86)	10,060 (44,747)	12" (30.48)	40" (101.60)	02206007
3.50"-3.99" (8.89-10.13)	12,070 (53,687)	12" (30.48)	44" (111.76)	02206008
4.00"-4.49" (10.16-11.40)	12,070 (53,687)	12" (30.48)	46" (116.84)	02206009
4.50"-4.99" (11.43-12.67)	12,070 (53,687)	12" (30.48)	68" (172.72)	02208009

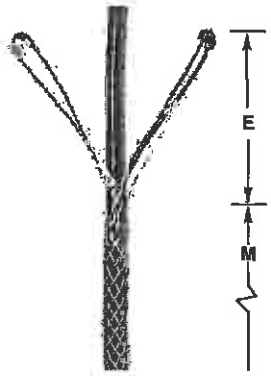

Double Eye, Closed Mesh

Double Eye, Split Mesh, Lace Closing*

For support when cable end is not available.

Cable Diameter Range Inches (cm)	Approx. Breaking Strength Lbs. (N)	E Inches (cm)	M Inches (cm)	Catalog Numbers
.75"-.99" (1.90-2.51)	2,820 (12,543)	10" (25.40)	25" (63.50)	02207001
1.00"-1.24" (2.54-3.15)	4,280 (19,037)	10" (25.40)	28" (71.12)	02207002
1.25"-1.49" (3.17-3.78)	4,280 (19,037)	10" (25.40)	30" (76.20)	02207003
1.50"-1.99" (3.81-5.05)	4,280 (19,037)	10" (25.40)	34" (86.36)	02207004
2.00"-2.49" (5.08-6.32)	8,050 (35,806)	12" (30.48)	36" (91.44)	02207005
2.50"-2.99" (6.35-7.59)	8,050 (35,806)	12" (30.48)	38" (96.52)	02207006
3.00"-3.49" (7.62-8.86)	10,060 (44,747)	12" (30.48)	40" (101.60)	02207007
3.50"-3.99" (8.89-10.13)	12,070 (53,687)	12" (30.48)	44" (111.76)	02207008
4.00"-4.49" (10.16-11.40)	12,070 (53,687)	12" (30.48)	46" (116.84)	02207009
4.50"-4.99" (11.43-12.67)	12,070 (53,687)	12" (30.48)	68" (172.72)	02209009

E-Eye length *M-Mesh length at nominal diameter*

** Change catalog number from 022 to 024 for stainless steel. Consult factory for availability.*

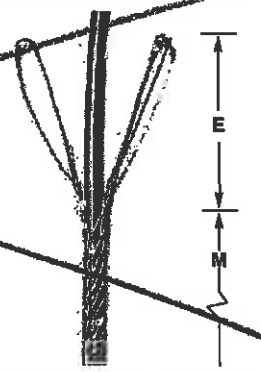

Double Eye, Split Mesh, Lace Closing