REQUEST FOR BID

FOR

MAINLINE SEWER POINT REPAIR

RFB No. 179821.71.0411

July 8, 2014

City of Memphis, Tennessee

Black & Veatch Corporation and Overland Contracting In c. (OCI), a subsidiary of Black & Veatch Corporation, are the Program Manager and Construction Manager respectively, for the SARP10 Program for the City of Memphis.

Overland Contracting Inc.
3485 Poplar Avenue, Suite 230, Memphis, TN, 38111

Table of Contents

00170 - Request for Bid 1
00170.1 Introduction 1
00170.2 Program Overview 1
00170.3 Scope of Work 1
00170.4 Bid Guarantee Requirements 1
00170.5 Request for Bid Definitions 2
00170.6 Minority Business Enterprise and Women Business Enterprise (M/WBE) Requirements 2
00170.7 Clarification of Bid 2
00170.8 Not Used 2
00170.9 Responsiveness 3
00170.10 Examination of Request for Bid Documents 3
00170.11 Interpretations and Addenda 3
00170.12 Modification or Withdrawal of Bid Submittals 3
00170.13 Rejection of Responses 4
00170.14 Other Items 4
00170.15 Selection Process 4
00170.16 Selection Schedule 4
00170.17 Mandatory Pre-Bid Meeting 5
00270 - Instructions to Bidders 6
00270.1 Bidder's Compliance with Request for Bid 6
00270.2 General Bid Parameters 6
00270.3 Bid Pricing 6
00270.4 Supplemental Bid Information 6
00270.5 Schedule Compliance 7
00270.6 Compliance with Request for Bid 7
00270.7 Bid Attachments 7
00270.8 Declarations 7
00270.9 Nondiscrimination 7
00270.10 Equal Business Opportunity Program (EBO) 8
00370 - Commercial Bid Form (10 pages) 9
00571 - Supplementary Terms and Conditions 10
00571.1 Notices and Correspondence 10
00571.2 Not Used 11
00571.3 Payment Terms 11
00571.4 Security Instruments 11
00571.5 Liquidated Damages 11
00571.6 Taxes 12
00572 - General Terms and Conditions 13
00572.1 Definitions 13
00572.2 Interpretation 14
00572.3 Subcontractor’s Status 14
00572.4 Invoicing and Payment 14
00572.5 Schedule 15
00572.6 Waivers of Lien 15
00572.7 Assignment 15
00572.8 Passage of Title, Risk of Loss, and Delivery 15
00572.9 Final Completion 15
00572.10 Warranty 16
00572.11 Compliance with Laws 16
00572.12 Business Practices 17
00572.13 Claims 17
00572.14 Subcontract Revisions and Work Authorizations 18
00572.15 Non-Disclosure 18
00572.16 Suspension of Work 18

00572.17 Termination for Cause 18
00572.18 Termination Without Cause 18
00572.19 Not Used 19
00572.20 Indemnity 19
00572.21 Insurance Requirements 19
00572.22 Audit 20
00572.23 Governing Law and Disputes 20
00574 – Jobsite Operations Terms and Conditions 22
00574.1 Subcontractor Scope of Work 22
00574.2 Safety Requirements 22
00574.3 Labor 22
00574.4 Protection and Restoration of Property 22
00575 - Safety, Health and Accident Prevention 24
00575.1 Project Safety and Health Program 24
00575.2 Safety, Health, and Accident Prevention Program 24
00575.3 Hazardous Waste Project Health and Safety Plan 24
00575.4 Protective Clothing, Equipment and Instrumentation 24
00575.5 Safety and Health Representative 25
00575.6 Safety and Health Goal 25
00575.7 Drug Prevention Program 25
00672 - General Conditions Attachments 26
00672.1 Waiver and Release of Lien Rights 26
00672.2 Final Waiver and Release of Lien Rights 28
00672.3 Certificate of Nondiscrimination (1 page) 30
00672.4 Equal Business Opportunity Program 31
00672.5 Report of Disadvantaged Business Enterprise Participation Form (1 page) 33
00672.6 State Revolving Fund (SRF) Front-Ends (56 pages) 34
00672.7 Bid Bond 35
00770 – Loss Control Manual 36
Technical Specifications 37
Section 00003 – Closed Circuit Television Inspection of Sewer Mains & Connections modified by SARP10 Program 37
Section 02540 – Sanitary Sewer Point Repairs modified by SARP10 Program
Section 02950 – Removal and Replacement of Pavements and Incidentals modified by SARP10 Program
Sanitary Sewer Point Repair
Pavement Repair Single Lane
Pavement Repair Multi-Lane
Pavement Repair Patch in Patch
Pavement Repair Cross Slope
Pavement Repair Traverse Patch37

00170 - Request for Bid

00170.1 Introduction

Sealed bids will be received at the Office of the City of Memphis Environmental Administration, Room 620, City Hall, 125 N. Main, Memphis, TN 38103, until **3:00 p.m. local time, Thursday, July 29, 2014** for furnishing the City of Memphis with the following:

FOR THE DIVISION OF: PUBLIC WORKS FOR THE CONSTRUCTION OF:
SARP10 Program Mainline Sewer Point Repair Project

The Sealed Bid envelope must be labeled with the project name, bidder's name, license bidder number, license expiration date, license classification. The Sealed Bid envelope must contain one (1) hardcopy of the bid and one (1) electronic CD copy of the bid.

Sealed Bids that are sent through the mail or other such delivery service shall be sent in such a manner so as to allow the opening of the "Mailing Container" and still have intact the sealed Bid. On the Mailing Container the sender shall state the words that a "**SEALED RESPONSE IS ENCLOSED**" and the Bid number.

Subcontractors intending to bid on this project must have submitted Registration documents electronically to Overland Construction, Inc. (OCI) per the instructions included in Advertisement Legal Notice Request for Bid No. 179821.71.0411 dated July 8, 2014 and due July 18, 2014.

00170.2 Program Overview

The Program consists of the management of the capital program needed to bring the City's wastewater and sewer system into compliance with federal and state regulations per The City of Memphis Wastewater Collection and Transmission System (WCTS) Condition Assessment and Rehabilitation Program Consent Decree signed on September 21, 2012, including the procurement of studies, design and construction services associated with the City of Memphis SARP10 Program.

00170.3 Scope of Work

The general scope of work for this RFB is the furnishing of labor, equipment, and materials for the mainline sewer point repair.

00170.4 Bid Guarantee Requirements

Guarantee Requirements:

(a) Bidder will not withdraw bid for one hundred eighty (180) calendar days after opening of bids without Purchaser's written consent.

(b) If bid is accepted, bidder will enter into formal Subcontract with Purchaser, within five (5) calendar days after receipt of Subcontract documents for execution.

(c) If bid is accepted, bidder will execute required 100% Performance/Payment Bond in accordance with Article 00571.4 and will obtain required insurance coverage in accordance with Article 00572.21 within ten (10) calendar days after receipt of Subcontract.

(d) All bids will require a bidder's bond or certified or cashier's check made payable to the Purchaser on a solvent bank in the amount of 5% of the bid. Said instrument to remain in effect and will be returned only after the Subcontract has been fully executed and secured. Additionally, the successful bidder shall execute a performance bond in an amount equal to 100% of the Subcontract sum as security for the faithful performance of the Subcontract and for the payment of labor and material furnished and incorporated

into the Work. The only acceptable form of instrument for this bid bond is bound herein, Article 00672.7.

Bidder shall be liable to the Purchaser for full amount of proposal guarantee as representing damage to the Purchaser on account of default of bidder if:

(a) Bid is withdrawn within one hundred eighty (180) calendar days after receipt of bids without approval by Purchaser.

(b) Bidder fails to enter into contract with Purchaser and execute required Performance Bond and provide required insurance coverage within ten (10) calendar days subsequent to notice of award of the Subcontract.

Firms desiring to submit a Bid should carefully review these instructions. Compliance with all requirements will be solely the responsibility of the Respondent.

00170.5 Request for Bid Definitions

Terms used in this Request for Bid documents are defined and have the meanings assigned to them as follows. The term "OCI", “Purchaser” or “Program Manager” means Overland Contracting Inc. The term "Respondent", “Firm”, “Company”, “Subcontractor” or “Bidder” means one who submits a Response for the purpose stated in this Solicitation Request for Bid documents. The terms “BID”, “Response” or “Respondent's Response” mean all submittal documents provided by the Respondent as required by this Request for Bid. The terms “Request for Bid” or “Bid Documents” mean the documents included in this Request for Bid.

Every effort has been made to use industry-accepted terminology in this Request for Bid. Any statement in this document, which uses words such as "must", "shall", "should", "provide for" or "have/provide the capability of/for", means that compliance with the intent of the statement is mandatory and that failure by the Respondent to satisfy that intent may be cause for the Response to be rejected.

00170.6 Minority Business Enterprise and Women Business Enterprise (M/WBE) Requirements

This section shall set forth the respondent's M/WBE Participation Plan that must be submitted and include: (1) the level and dollar amount of participation your firm anticipates to achieve in the performance of the Subcontract resulting from this RFB; (2) the type of Work to be performed by the M/WBE firms participating; and (3) the names of the M/WBE firms the Respondent plans to utilize in the performance of the Subcontract resulting from this RFB.

Executive Order 11625:

MBE minimum	**2.6%**
WBE minimum	**2.6%**

Executive Order 11246:

MBE minimum	**32.3%**
WBE minimum	**6.9%**

00170.7 Clarification of Bid

Purchaser reserves the right to obtain clarification of any point in a Response or to obtain additional information as necessary to properly evaluate a particular Response. Failure to respond to such a request for additional information or clarification in a timely manner may result in rejection of the Response.

00170.8 Not Used

00170.9 Responsiveness

Respondents should respond to all requirements of the Bid to the maximum extent possible and are required to clearly identify any limitations or exceptions to the requirements.

00170.10 Examination of Request for Bid Documents

Before submitting a Response, each Respondent must:

Study and carefully correlate the Respondent's observations and responses with the Bid Documents.

Notify Purchaser, of all conflicts, errors and discrepancies, if any, in the Bid Document submitted.

Review the Loss Control Manual and State Revolving Fund (SRF) Documents.

Respondents by and through the submission of their Response, agree that they shall be held responsible for having therefore familiarized themselves with the nature and extent of the requirements in the Bid Documents.

00170.11 Interpretations and Addenda

If any prospective Firm is in doubt as to the true meaning of any part of the Requirements For Preparing and Submitting Bid Submittal for the requested services, they may submit a written request (verbal requests will not be accepted) for an interpretation up to June 5, 2014. The person submitting the request will be responsible for its prompt delivery. Any interpretation of the proposed documents will be made only by addendum transmitted to each party receiving a set of such documents. Purchaser will not be responsible for any other explanations or interpretations of the proposed documents. Any requests not submitted within this time period will be deemed waived.

SUBMIT ALL QUESTIONS IN WRITING OR BY E-MAIL TO:
Overland Contracting Inc.
Attn: Brad Davis
3485 Poplar Ave, Suite 230
Memphis, TN 38111
E-Mail: DavisBJ@bv.com
Cc: RayEM@bv.com
(Reference: SARP10 Program Mainline Sewer Point Repair Project, BID SUBMITTAL No. 179821.71.0411)

Each written request must reference the Bid name and number "*SARP10 Program Mainline Sewer Point Repair Project, Bid No. 179821.71.0411*" in the subject line and mailed (or e-mailed) to the attention of Brad Davis, Project Manager with a copy to Emily Ray, Project Procurement Manager. All requests or questions should be clearly marked and must be received no later than the date and time listed in the Selection Schedule.

A response will be returned via addendum to all Firms along with the original question(s).

There shall be no communication between the Firm, their employees or subcontractors concerning this Bid to anyone within Black & Veatch, OCI, Allen & Hoshall, Allworld Project Management, Gresham Smith and Partners, Integrated Circles Technologies, Carter-Malone Group, or City of Memphis employee or any such person's spouse, child, parent, brother, sister, dependent or person assuming a relationship being the substantially equivalent of the above except through Brad Davis. **Failure to comply with this requirement will be grounds for disqualification.**

00170.12 Modification or Withdrawal of Bid Submittals

Responses may be modified or withdrawn by an appropriate document duly executed (in the same manner that a Response must be executed) and delivered to the place where Responses are to be submitted at any time prior to the submission deadline. A request for withdrawal or a modification must

be in writing and signed by an authorized person. Evidence of such authority must accompany the request for withdrawal or modification. Withdrawal of a Response will not prejudice the rights of a Responder to submit a new Response prior to the Response deadline. After expiration of the period for receiving Responses, only Purchaser may request clarifications or additional information.

00170.13 Rejection of Responses

To the extent permitted by applicable local, state and federal laws and regulations, Purchaser reserves the right to reject any and all Responses, to waive any and all informalities not involving price, time, or changes in the Work with the successful Respondent, and the right to disregard all non-conforming, non-responsive, unbalanced or conditional Responses. Also, Purchaser reserves the right to reject a Response, in its sole discretion, if the City of Memphis believes that it would not be in its best interest to make an award to that Respondent.

Purchaser reserves the right to reject any Response if the evidence submitted by the Responder or if the investigation of such Respondent fails to satisfy Purchaser that such Respondent is properly qualified to carry out the obligations and to complete the Work contemplated therein. All Responses will be rejected if there is reason to believe that collusion exists among Respondents. Responses will be considered irregular and may be rejected if they show serious omissions, alterations in form, additions not called for, conditions or unauthorized alterations, or irregularities of any kind.

00170.14 Other Items

This Bid does not commit Purchaser to enter into a Subcontract, nor does it obligate Purchaser to pay for any costs incurred in the preparation and submission of Responses or in anticipation of a Subcontract. Costs of preparing the Bid in response to this request are solely the responsibility of the Respondent.

By responding to this solicitation, the respondent attests that no employee of Black & Veatch, OCI, Allen & Hoshall, Allworld Project Management, Gresham Smith and Partners, Integrated Circles Technologies, Carter-Malone Group, or City of Memphis employee or any such person's spouse, child, parent, brother, sister, dependent or person assuming a relationship being the substantially equivalent of the above, has an existing or pending, direct or indirect, financial interest in the respondent's business.

No Respondents to this solicitation shall discriminate against any employee or applicant for employment because of race, religion, color, sex, age, or national origin.

00170.15 Selection Process

Purchaser intends to select one Firm based on price and successful completion and approval of the OCI Registration process. There is a local contractor preference of 5%. For evaluation purposes the 5% will be applied to the Total Estimated Unit Price Value.

00170.16 Selection Schedule

The following schedule will be adhered to during the selection process. It is subject to change at the sole discretion of OCI.

Event	Completed By
Advertising date	July 8, 2014
Pre-Bid meeting	July 15, 2014
Registration Information submitted per 179821.71.0411 Advertisement	July 18, 2014
Last date for questions	July 21, 2014
Issue Addendum for answers to questions	July 23, 2014
Receive all Bids	July 29, 2014 by 3:00 pm local time

Event	Completed By
Public Opening	July 29, 2014 immediately following receipt of bids
Public Notice of Award	August 7, 2014
Tentative Notice to Proceed	August 18, 2014
Preconstruction Meeting with Subcontractor	August 21, 2014

00170.17 Mandatory Pre-Bid Meeting

A mandatory pre-bid meeting will be held from **3:00 P.M to 5:00 P.M (local time)** at **2714 Union Avenue Extended, 5th Floor Training Room, Memphis, TN 38112** on **Wednesday, July 15, 2014**. You are required to attend the pre-bid meeting at your own cost. Attendance shall be limited to three representatives per Bidder. Contact Purchaser at least two calendar days before the pre-bid meeting in order to coordinate your attendance.

00270 - Instructions to Bidders

00270.1 Bidder's Compliance with Request for Bid

Provide the information requested and any supporting information necessary to permit a complete analysis of your bid. You acknowledge that preparation and submission of a bid will be at your sole cost and that you will treat this RFB and any resulting discussions as confidential. If you do not agree to treat this RFB and associated discussions as confidential, return the complete RFB to Purchaser and delete or destroy any copies you made.

00270.2 General Bid Parameters

Provide the information requested in Section 00270 and Section 00370 in the appropriate fields of Section 00370. Complete each line of Section 00370 in its entirety and submit it with your bid in accordance with Section 00170. Do not alter Section 00370 forms in any way or deviate from the terminology used or the unit of measure indicated when completing Section 00370. Submit Section 00370 forms in their original core application software, with no embedded programming and no permissive encoding restricting access to the data provided.

00270.2.1 Bidder's Contact Information

Include contact information for your representative in Article 00370.2.1. Your representative must have the appropriate expertise and authority to negotiate on behalf of your company.

00270.2.2 Addenda to Request for Bid

In Article 00370.2.2, list all addenda received from Purchaser and indicate "Yes" to show your receipt of and incorporation of the listed addenda into the proposal. Address any exceptions or clarifications to addenda in accordance with Article 00270.6.

00270.3 Bid Pricing

You must include numerical values in the applicable fields of Tables 00370.3.1 through 00370.3.3. Non-numerical values, such as "included" or "not applicable," are not acceptable. Purchaser will evaluate fields left blank or filled with a zero as scope included in your bid at no cost.

00270.3.1 Unit Pricing

Provide the unit prices to perform the Work in accordance with this RFB in Table 00370.3.1. A unit price is the total amount to be billed to Purchaser for a specific unit of work. Unit pricing includes all costs, overhead, profit and mark-up associated with delivering the complete unit.

00270.4 Supplemental Bid Information

00270.4.1 Company Status

In Article 00370.4.1, indicate the type of your organization's legal entity and the state and country in which it is organized.

00270.4.2 Contractor License

If you are not licensed to perform the Work, indicate "No" in Article 00370.4.2. If you indicate "No," declare an exception in accordance with Article 00270.6.

00270.4.3 Not Used

00270.4.4 Bid Validity Period

Indicate "Yes" in Article 00370.4.4 if your proposal is valid for one hundred eighty calendar days after the Proposal Due Date (the "Proposal Validity Period"). If you indicate "No" in Article 00370.4.4, provide the number of calendar days that your proposal is valid in Article 00370.4.4 and declare an exception in accordance with Article 00270.6. Purchaser may reject your proposal without prior notice if your proposal is not valid for the full Bid Validity Period.

00270.4.5 Firm Non-Escalatable Pricing

Indicate "Yes" in Article 00370.4.5 if the proposal pricing is firm and not subject to escalation. If you indicate "No," declare an exception in accordance with Article 00270.6 and include the terms of escalation in your exception.

00270.4.6 Taxes

Tax requirements are identified in Article 00571.6. Indicate "Included" in Article 00370.4.6 if your proposal includes the tax requirements. If you indicate "Excluded" in Article 00370.4.6, declare an exception in accordance with Article 00270.6.

00270.4.7 Work at Jobsite

Identify the type of craft labor.
If you plan to subcontract any of the Work, indicate “Yes” in the appropriate section of Article 00370.4.7 and complete Table 00370.4.7.

00270.5 Schedule Compliance

Indicate "Yes" in Article 00370.5 if you can meet the schedule dates included in Table 00370.5. If you indicate "No," submit an alternative summary level schedule with your proposal.

00270.6 Compliance with Request for Bid

00270.6.1 Declared Exceptions to RFB Requirements

An exception is any variation from an express RFB requirement. Declare all exceptions, whether commercial or technical in nature, in Table 00370.6.1. Provide specific exceptions and accurately reference the article number to which each exception applies. Exceptions of a general nature or that refer to your standard specifications or terms are not acceptable and may result in Purchaser rejecting your bid without prior notice.

00270.6.2 Declared Clarifications to RFB Requirements

A clarification is the means by which you offer to meet an RFB requirement if the RFB does not identify the specific means by which the RFB requirement must be met. Declare any clarifications, whether commercial or technical in nature, in Table 00370.6.2. Reference the article number to which each clarification applies.

00270.7 Bid Attachments

List any supplemental documents included in your bid in Article 00370.7.

00270.8 Declarations

Indicate "Yes" in Article 00370.8 to confirm you have familiarized yourself with the conditions affecting the Work. If you indicate "No," declare an exception in accordance with Article 00270.6.

00270.9 Nondiscrimination

All entities contracting with the Purchaser agree to abide by and to take affirmative action when necessary to ensure compliance with the nondiscrimination clauses set out below, and agree to show proof of non-discrimination upon request and to post in conspicuous places available to all associate agents and their employees. In the event of non compliance with nondiscrimination clauses, or with provisions of Executive Orders 11141 (age), 11246, 11375 (women), 12086 (Vietnam veterans), 11478 (federal employees), 11625 (minority business) 11701 (veterans), Title 41, Chapter 60 (handicapped) and specifically the handicapped affirmative action clause in Section 60-741.6.9 of OFCCP Rules, and any and all other federal laws prohibiting discrimination, contracts may be canceled, terminated, or suspended in whole or in part by the Purchaser.

The Bidder shall execute the specified Nondiscrimination Certificate (see Section 00672.3) agreeing that, if awarded the Subcontract, he/she shall not discriminate against any Sub-subcontractor, employee, or applicant for employment on the grounds of race, color, national origin or sex, in accordance with the

citations listed in the above paragraph; and shall require the execution of such a certificate for each Sub-subcontractor prior to award of any subcontract with the further requirement that each subcontractor shall include identical requirements in any lower tier subcontracts which might in turn be made. FAILURE TO EXECUTE AND SUBMIT SUCH CERTIFICATE WITH THE BID MAY CAUSE THE BID TO BE REJECTED AS NON-CONFORMING. The successful Bidder and all Sub-subcontractors under the general contract shall maintain copies of their payrolls and all subcontracts for each weekly payroll period for the life of the construction and for a period of **THREE (3) YEARS** after final release and payment is made by the Purchaser to the contractor.

00270.10 Equal Business Opportunity Program (EBO)

The Bidder must complete and return the Equal Business Opportunity Program Compliance Form included in Section 00672.4 of this RFB.

00370 - Commercial Bid Form (10 pages)

00370 - Commercial Bid Form

Bidder should refer to Section 00270, Instructions to Bidders, when completing this Bid Form. Bidder shall complete this form entirely and return it with Bidder's Bid.

00370.1 Bid Submitted by	**Bidder Response Column**
Company Name	
Mailing Address/Number, Street	
Mailing Address/State, Zip Code	
Country	
Taxpayer ID Number (or EIN)	
Bidder's Bid Date	
Bidder's Bid No.	

00370.2 General Bid Parameters

Bidder is providing the information defined by the articles comprising Section 00270, INSTRUCTIONS TO BIDDERS, in the corresponding fields of this Section 00370, COMMERCIAL BID FORM.

00370.2.1 Bidder's Contact Information	**Bidder Response Column**
Bidder's Representative Name	
Mailing Address/Number, Street	
Mailing Address/City	
Mailing Address/State, Zip Code	
Delivery Address/Number, Street	
Delivery Address/State, Zip Code	
Country	
Email Address	
Phone Number	**( ) - ( )**
Mobile Phone Number	**( ) - ( )**
Fax Number	**( ) - ( )**
Business Interruption Plan	
Confirm that Bidder maintains a Business Interruption/Disaster Recovery Plan that documents how Bidder will respond to disaster or pandemic to help minimize impact - Yes/No If Yes, plan should be submitted with RFB.	

00370.2.2 Addenda to Request for Bid

Bidder acknowledges receipt and inclusion of the following Addenda to the RFB - **Yes/No**

	Addenda Number	**Date Issued**	**Bidder Response Column** **Received and Incorporated**

00370.3 Bid Pricing Information

00370.3.1 Bid Prices	**See Attached Pricing Table(s) [List Tables Used]**

00370.4 Supplemental Bid Information

Bidder provides the following information to supplement the Bidder's bid pricing.

00370.4.1 Company Status	**Bidder Response Column**
Bidder's company status is:(i.e., partnership, individual owned, joint venture, corporation, etc.)	
in State of	
in Country of	

00370.4.2 Contractor License	Bidder Response Column
Bidder certifies that it is licensed, as required, to engage in the RFB Work scope in the State/Province/Country the RFB Work is to be performed. - **Yes/No**	
1st License Title	
in State/Province of	
License Number	
2nd License Title	
in State/Province of	
License Number	
00370.4.3 DUNs Number	
00370.4.4 Bid Validity Duration	**Bidder Response Column**
Bidder's bid is valid for acceptance by the Purchaser for a period of 180 days from the bid due date. - **Yes/No**	
If no, Bidder's bid is valid for indicated days from bid due date. - **No. Days**	
00370.4.5 Firm Non-Escalatable Pricing	**Bidder Response Column**
All of Bidder's prices herein bid are firm and are non-escalatable. - **Yes/No** If No, explanation is included as an Exception.	
00370.4.6 Taxes	**Bidder Response Column**
Bidder's prices included herein are in accordance with Article 00571.6 Taxes. - **Yes/No** If No, explanation is included as an Exception.	
00370.4.7 Work at Jobsite	**Bidder Response Column**
Bidder's source of craft labor to be utilized in the performance of the Work is	
Bidder has accounted for all Jobsite existing and controlling conditions and limitations which may affect the Work performance and the Bidder's Bid. - **Yes/No** If No, explanation is included in Exception.	
Bidder proposes that it will perform all the Work at the Jobsite with its own forces. - **Yes/No**	
Bidder has indicated proposed sub-subcontracted Work in attached Table 00370.4.7. - Yes/No	
Bidder has provided proposed Small Business/Minority/Disadvantaged Entrepreneur Participation Plan with its bid. - **Yes/No**	
00370.5 Schedule Compliance	
Bidder agrees to meet the schedule dates indicated in the RFB documents: - **Yes/No** If No, explanation is included in Exception.	
If No, Bidder has completed and submitted an attached alternative summary level schedule: - **Yes/No**	
00370.6 Compliance with Request for Bid	
NOTE: A bid based on Bidder's standard terms and conditions will not be considered. The bid must address specific exceptions, if any, to Purchaser's terms and conditions.	
Bidder certifies that its bid complies with all RFB commercial and technical requirements without exception and clarification. - **Yes/No**	
00370.6.1 Exceptions	
Bidder certifies that its bid complies with all RFB commercial and technical requirements except for the following:	**Bidder Response Column**
Bid is based on acceptance of all commercial requirements of this RFB. - **Yes/No**	
If No, all Commercial Exceptions have been accurately defined and identified as "Commercial Exceptions" on the Purchaser provided and Bidder attached Exceptions Form: - **Yes/No**	
Bid is based on acceptance of all technical requirements of this RFB. - **Yes/No**	
If No, all Technical Exceptions have been accurately defined and identified as "Technical Exceptions" on the Purchaser provided and Bidder attached Exceptions Form. - **Yes/No**	

00370.6.2 Clarifications	Bidder Response Column
Bidder certifies that its bid complies with all RFB commercial and technical requirements without clarification. - **Yes/No**	
If No, all Commercial Clarifications have been accurately defined and identified as "Commercial Clarifications" on the Purchaser provided and Bidder attached Clarification Form. - **Yes/No**	
If No, all Technical Clarification have been accurately defined and identified as "Technical Clarifications" on the Purchaser provided and Bidder attached Clarification Form. - **Yes/No**	
00370.7 Bid Attachments	
In addition to this Commercial Bid Form and Tables indicated herein, the Bidder's Bid contains supplemental information and details attached to this bid consisting of the following:	**Bidder Response Column**
(Attachment 1)	
(Attachment 2)	
(Attachment 3)	
(Attachment 4)	
(Attachment 5) (Add additional lines as needed)	
00370.8 Declarations	
The Bidder declares that it has familiarized itself with the conditions affecting the Work. The Bidder also declares that only the persons or firms interested in the bid as principal or principals are named herein; that no other persons or firms have any interest in this bid or in the Subcontract to be entered into; that this bid is made without connection with any person, company, or party likewise submitting a bid; and that it is in all respects for and in good faith, without collusion or fraud. - **Yes/No**	
If written notice of acceptance of this bid is delivered to the Bidder within "Bid Validity" days after the date set for receipt of bid, or any time thereafter before the bid validity expires, the Bidder will, within 5 days after receipt of a formal Subcontract for signature, exercise and deliver to Purchaser a signed Subcontract in the form provided by the Purchaser in accordance with the documents provided herein. - **Yes/No**	

Table 00370.3.1 - Unit Price Bid Form

Bidder should refer to Section 00270, Instructions to Bidders, when completing this Bid Form. Bidder shall complete this form entirely and return it with Bidder's Bid.

Bid Submitted by (Company Name)

00370.3 Bid Pricing Information

00370.3.1 Unit Pricing

Bidder proposes to complete the RFB Work based on firm, fixed, unit prices (US dollars), which prices multiplied by the final Work quantities would represent the full consideration to Bidder for its complete and satisfactory performance of the Work in compliance with all the terms and conditions of the RFB Documents. The Unit Prices in this Table include the cost of all the work which is required or implied by the RFB documents or which may be inferred therefrom, and which is customarily provided in furnishing a complete and finished work item of its kind. Further, any and all alterations, modifications, and adjustments to the work item, which is reasonably foreseeable or customarily encountered in providing and installing equipment, material, and services of the work item kind, will be performed without additional compensation.

In the event of a Purchaser-approved change in the scope of Work for which a unit price from this Table is not applicable, as determined by the Purchaser, the Subcontractor shall provide a new unit price for review and acceptance by the Purchaser. Subcontractor shall provide all information requested by the Purchaser to substantiate the value of the new unit price.

00370.3.1.1 Unit Prices

				Bidder Response Columns	
Item Number	**Item Description**	**Unit of Measure**	**Estimated Quantity**	**Unit Price**	**Extension Price**
00003-6.01	Light Cleaning & Mainline CCTV Inspection for all Diameters	Linear Foot	18,000	$ -	$ -
02540-5.01.01	Sewer Point Repair, 6" through 10" Pipe (<10' Deep)	Each	20	$ -	$ -
02540-5.01.02	Sewer Point Repair, 6" through 10" Pipe (10.1'-15' Deep)	Each	12	$ -	$ -
02540-5.01.03	Sewer Point Repair, 6" through 10" Pipe (15.1'-20' Deep)	Each	3	$ -	$ -
02540-5.01.04	Sewer Point Repair, 12" through 18" Pipe (<10' Deep)	Each	10	$ -	$ -
02540-5.01.05	Sewer Point Repair, 12" through 18" Pipe (10.1'-15' Deep)	Each	3	$ -	$ -
02540-5.01.06	Sewer Point Repair, 12" through 18" Pipe (15.1'-20' Deep)	Each	3	$ -	$ -
02540-5.01.07	Sewer Point Repair, 21" through 24" Pipe (<10' Deep)	Each	3	$ -	$ -
02540-5.01.08	Sewer Point Repair, 21" through 24" Pipe (10.1'-15' Deep)	Each	3	$ -	$ -
02540-5.01.09	Sewer Point Repair, 21" through 24" Pipe (15.1'-20' Deep)	Each	3	$ -	$ -
02540-5.02	Traffic Control per Point Repair	Each	60	$ -	$ -
02540-5.03	Removal & Replacement of Vegetated Area	Square Yard	80	$ -	$ -
02540-5.04	Pavement Backfill	Ton	4,500	$ -	$ -
02950-01.01	Asphaltic Concrete Pavement Removal and Replacement	Square Yard	2,000	$ -	$ -
02950-01.02	Concrete Pavement Removal and Replacement	Square Yard	200	$ -	$ -
02950-02	Concrete Sidewalk Removal and Replacement	Square Foot	500	$ -	$ -
02950-04	Concrete Curb and Gutter Removal and Replacement	Linear Foot	180	$ -	$ -
	100% Performance and Payment Bonds	Lot	1	$ -	$ -
				Total Estimated Unit Price Value	$ -

Note the Subcontractor shall provide documentation to determine compensated cost per point repair using the rates described above.

Table 00370.4.7 - Sub-Subcontracts

Bidder should refer to Section 00270, Instructions to Bidders, when completing this Table.			
Bid Submitted by (Company Name)			
00370.4.7 Sub-Subcontracts			
Bidder proposes that specific portions of the Work scope not performed by Bidder will be Sub-Subcontracted to the Sub-subcontractors indicated below. The value of each Sub-subcontract is indicated as an approximate percentage value of the total monetary value of the Bidder's Bid.			
00370.4.7.1 Sub-Subcontracted Work			
Scope of Sub-Subcontracted Work	**Sub-subcontractors** (Name and Address)	**MBE or WBE**	**% of Total Work Value**
% of Work performed by Bidder.	(Bidder Company Name)		100.0%
(a)			
(b)			
(c)			
(d)			
(e)			
(f)			
(g)			
	Total Percentage Value (Must Equal 100%)		100.0%

Table 00370.6.1 - Exceptions Form

Bidder should refer to Section 00270, Instructions to Bidders, when completing this Form.

Bid Submitted by (Company Name)

00370.6.1 Exceptions

The Bidder's specific Exceptions herein itemized and included with the bid represent an exhaustive list of any and all explicit variations or deviations from the requirements of the RFB documents. Bidder confirms that otherwise, it is the intent of Bidder's bid that the Work will be performed in strict accordance with the requirements of the RFB documents.

00370.6.1.1 Commercial Exceptions

Count	Reference Article	Stated Commercial Exception
CE1		
CE2		
CE3		
CE4		
CE5		
CE6		
CE7		
CE8		
CE9		

00370.6.1.2 Technical Exceptions

Count	Reference	Stated Technical Exceptions
TE1		
TE2		
TE3		
TE4		
TE5		
TE6		
TE7		
TE8		
TE9		
TE10		
TE11		
TE12		
TE13		
TE14		
TE15		
TE16		
TE17		
TE18		
TE19		
TE20		

Table 00370.6.2 - Clarifications Form

Bidder should refer to Section 00270, Instructions to Bidders, when completing this Form.	
Bid Submitted by (Company Name)	
00370.6.2 Clarifications	
All of Bidder's Clarifications herein itemized and included with the bid **do not** constitute explicit variation or deviation from performance of the Work by the Bidder in strict accordance with the requirements of RFB documents.	

00370.6.2.1 Commercial Clarifications

Count	Reference Article	Stated Commercial Clarification
CC1		
CC2		
CC3		
CC4		
CC5		
CC6		
CC7		
CC8		
CC9		

00370.6.2.2 Technical Clarifications

Count	Reference	Stated Technical Clarification
TC1		
TC2		
TC3		
TC4		
TC5		
TC6		
TC7		
TC8		
TC9		
TC10		
TC11		
TC12		
TC13		
TC14		
TC15		
TC16		
TC17		
TC18		
TC19		
TC20		

00370.7 Schedule Compliance
State any exceptions in 00370.6.1.

00370.7.1 Construction Milestone Completion Dates				
Item	**Milestone Description**	**Construction Milestone Completion Date**	***LDs Apply?**	**Bidder Complies? (Yes/No)**
1	Work will be released to Subcontractor in groups of five (5) point repairs. The Subcontractor shall complete all of the Work related to these five repairs within thirty (30) days of receiving the list.	30 days after receiving the list from Purchaser	Yes	
2	Once a repair is started, the Subcontractor shall complete the Work within 7 days (including any repaving).	7 days after start of asphalt cutting	Yes	
*LD indicates that completion of the Work after the "Construction Milestone Completion Date" is subject to liquidated damages per applicable Articles of Section 00571.				
*Note Subcontractor performance will directly impact future procurements for the SARP10 Program, schedule is critical and must be maintained.				

00370.8 Schedule of Submittals

Effective Date: TBD

The following are post-award Subcontract submittals. This list is not all-inclusive. The RFB documents contain submittal requirements that are not included in this list. It will, however, remain the successful Bidder's responsibility to comply with submittal requirements whether or not the submittal is included in the following list:

If Bidder does not agree, state an exception in 00370.6.1.

Item	Reference Section	Submittal Item	Submittal Dates: Calendar Days		Submittal Dates: Event	Submittal Dates: Due Date	Bidder Agrees? Yes/No
00370.8.1 Commercial Submittals							
C01	None	Executed Subcontract in the form provided by the Purchaser	5	After	Receipt of Subcontract for Signature		
C02	00571	Payment Estimate Breakdown	10	After	Effective Date and Prior to First Payment with monthly updates		
C03	00571	Security Instruments	10	After	Effective Date		
C04	00572	Lien Waivers and Report of Disadvantaged Business Enterprise Participation Form		With	Each Invoice		
C05	00572	Final Lien Waivers from Subcontractor and Sub-subcontractors and Sub-subcontractors subcontractors and Report of Disadvantaged Business Enterprise Participation Form		With	Final Invoice		
C06	00571	Final Payment Invoice and Report of Disadvantaged Business Enterprise Participation Form	45	After	Issuance of the Notice Of Final Completion and Acceptance		
C07	00572	Contractor Licenses	14	Before	Mobilization Onsite		
C08	00572	Written Notice and Supporting Documentation, of all Claims	5	After	Occurrence of Event Giving Rise to the Claim		
C09	00572	Insurance Certificates for Purchaser Approval		Prior to	Mobilization		
C10	00572	Initial Issue Subcontractor's Work Execution Schedule	30	After	Effective Date		
C11	00571	Subcontractor Actual Man-hours Expended and Quantities Installed	Weekly	After	Mobilization Onsite		
C12	00575	Subcontractor's Daily Report	Daily	After	Mobilization Onsite		
C13	00575	Signed Daily Reports		Daily	After Mobilization Onsite		
C14	00575	Weekly Coordination Meeting Agenda Input	Weekly	Prior to	Weekly Coordination Meeting		
C15	00575	Subcontractor's Safety, Health and Accident Prevention Program		Prior to	Mobilization Onsite		
C16	00575	Subcontractor's Hazardous Waste Project Health and Safety Plan		Prior to	Mobilization Onsite		
C17	00575	Safety and Health Representative Resume		Prior to	Assignment and Mobilization		
C18	00575	Verification of meeting Hazardous Waste Requirements of 29CFR1910.120	5	Prior to	Mobilization Onsite		
C19	00575	Hazardous Materials Documentation		With	Each Hazmat Shipment		
C20	00575	Safety and Health Records	Monthly	After	Mobilization Onsite		
C21	00575	Evidence that Jobsite Personnel have Passed Drug Testing	10	Prior to	Mobilization Onsite		
C22	Loss Control Manual	Fall Protection Plan	5	Prior to	Starting Work Operations		
C23	Loss Control Manual	Chemical Hazard Communication Plan, as applicable	5	Prior to	Mobilization Onsite		
C24	Loss Control Manual	Substance Abuse Program	5	Prior to	Mobilization Onsite		
C25	SRF	W-9 of Subcontractor and Sub-subcontractors also include Contact Information for each including email and address		With	Bid		
C26	00672.3	Certificate of Nondiscrimination for Subcontractor and Sub-subcontractors		With	Bid		
C27	00672.4	Equal Business Opportunity Program Compliance Form for Subcontractor and Sub-subcontractors		With	Bid		
C28	00672.6	Certification Regarding Debarment Subcontractor and Sub-subcontractors		With	Bid		

00370.8 Schedule of Submittals

Effective Date: TBD

The following are post-award Subcontract submittals. This list is not all-inclusive. The RFB documents contain submittal requirements that are not included in this list. It will, however, remain the successful Bidder's responsibility to comply with submittal requirements whether or not the submittal is included in the following list:

If Bidder does not agree, state an exception in 00370.6.1.

Item	Reference Section	Submittal Item	Submittal Dates: Calendar Days		Submittal Dates: Event	Submittal Dates: Due Date	Bidder Agrees? Yes/No
C29	00672.6	Certification Regarding Equal Employment Opportunity for Subcontractor and Sub-subcontractors		With Bid			
C30	SRF	M/WBE Certificates for both Subcontractor and Sub-subcontractors as applicable		With Bid			
C31	SRF	EPA Form 6100-2 for DBE/MBE/WBE Sub-subcontractors	10	After	Effective Date and as updated		
C32	SRF	EPA Form 6100-3 for DBE/MBE/WBE Sub-subcontractors		With	Bid and as updated		
C33	SRF	EPA Form 6100-4 for Subcontractor		With	Bid and as updated		
C34	SRF	Employee Rights under the Davis-Bacon Act Poster (English and Spanish)		Posted	All Sites to be easily accessed/viewed and protected from weather		
C35	SRF	WH-1321 poster		Posted	All Sites to be easily accessed/viewed and protected from weather		
C36	SRF	Wage Decision		Posted	All Sites to be easily accessed/viewed and protected from weather		

00571 - Supplementary Terms and Conditions

00571.1 Notices and Correspondence

The parties agree to send all notices arising out of or related to this Subcontract by one of the following methods: (a) personal delivery; (b) certified mail with return receipt; (c) nationally recognized overnight mail or courier service, with delivery receipt requested; or (d) email. The parties may send routine correspondence by email or first class mail, each without confirmation of receipt. The parties agree to address notices and correspondence as indicated in this article. Subcontractor agrees that delivery of a notice or of correspondence by Purchaser to Subcontractor's at the jobsite constitutes personal delivery.

Electronic Technical Correspondence

Addressed to Purchaser:	**Addressed to Subcontractor:**
To: Brad Davis	To: [[name]]
DavisBJ@bv.com	[[email address]]
	Cc: [[name]]
	[[email address]]

Non-Electronic Technical Correspondence

Addressed to Purchaser:	**Addressed to Subcontractor:**
Overland Contracting Inc.	[[subcontractor entity]]
3485 Poplar Avenue, Suite 230	[[street address]]
Memphis, TN 38111	[[city, state, zip code]]
Attention: Brad Davis	Attention:
179821.71.0411	[[subcontract number]]

Electronic Commercial Correspondence (excluding invoices)

Addressed to Purchaser:	**Addressed to Subcontractor:**
To: Emily Ray	To: [[name]]
RayEM@bv.com	[[email address]]
	Cc: [[name]]
	[[email address]]

Non-Electronic Commercial Correspondence (excluding invoices)

Addressed to Purchaser:	**Addressed to Subcontractor:**
Overland Contracting Inc.	[[subcontractor entity]]
8400 Ward Parkway	[[street address]]
Kansas City, MO 64114	[[city, state, zip code]]
Attention: Emily Ray	Attention:
179821.71.0411	[[subcontract number]]

Electronic Invoices
Prior to Invoice submission to BVAPMarkView@bv.com, Subcontractor will send a copy to OlderGS@bv.com, DavisBJ@bv.com and ChenJ2@bv.com for review and approval. Once Julia Chen receives Project Manager approval, she will notify the Subcontractor to submit the Invoice to BVAPMarkView@bv.com. Subcontractor shall utilize the A1A form, available upon request.

Original Invoice:	**With a Copy to:**
To: Overland Contracting Inc.	To: Julia Chen
BVAPMarkView@bv.com	ChenJ2@bv.com
Fax (866) 941-9458	
Attention: BVAP	
179821.71.0411	

00571.2 Not Used

00571.3 Payment Terms
The following payment terms shall apply in addition to the corresponding provisions contained in Article 00572.4 Invoicing and Payment.

The Parties will meet each month at an agreed time in order to determine the quantity of materials used and man-hours expended during the invoice period. The Parties will use the field progress measurement system to calculate that month's payment total by adding the Subcontract unit price totals based on actual Work completed.

00571.4 Security Instruments
Subcontractor shall give Purchaser separate performance and payment bonds in the format of AIA Document 312 - 2010 Performance Bond and Payment Bond, each in the amount of the Subcontract Price. Subcontractor shall submit the bonds to Purchaser by the due date specified in the Article titled "Schedule of Submittals and Applicable Liquidated Damages". The bonding company must be licensed to bond in the state in which the Project is located and must be rated "A" or better by A.M. Best and included in the Department of the Treasury's Listing of Approved Sureties (Department Circular 570).

00571.5 Liquidated Damages

00571.5.1 General
Subcontractor's failure to meet the requirements identified in this Article 00571.5 will cause Purchaser to incur harm that will be very difficult to ascertain with certainty. The Parties therefore agree the liquidated damages specified in this Article 00571.5 represent a reasonable estimate of Purchaser's harm and are not intended as a penalty. Subcontractor's obligation to pay liquidated damages for breach of one specified requirement does not relieve Subcontractor of its obligation to pay liquidated damages for breach of another specified requirement. Subcontractor's payment of liquidated damages for breach of the specified requirement is Purchaser's sole and exclusive remedy with regard to Subcontractor's breach of that requirement, except for any other express remedies stated in the Subcontract. If Purchaser terminates the Subcontract for cause, liquidated damages will cease to accrue after the termination date and Subcontractor's remaining liability will be calculated in accordance with Article 00572.17.

00571.5.2 Not Used

00571.5.3 Construction Milestone Dates
Each construction milestone subject to liquidated damages for late completion is listed in the article titled "Construction Milestone Completion Dates and Applicable Liquidated Damages". If all portions of the

Work comprising the construction milestone do not meet the Subcontract requirements on the construction milestone completion date, liquidated damages will accrue for each failure as shown below.

> Beginning on the first calendar day after the specified construction milestone completion date for each construction milestone and continuing until the construction milestone is completed, delay liquidated damages will be assessed at the rate of five hundred dollars ($500.00) per calendar day.

00571.6 Taxes

Subcontractor shall pay all payroll and other related employment compensation taxes for Subcontractor's employees, federal, state and other taxes which may be assessed on Subcontractor's income from the Project, engineering and business license costs (collectively, the "Subcontractor Taxes"). Subcontractor shall administer and pay all sales, use, gross receipts and excise taxes (collectively, the "Project Taxes"). Subcontract price includes Subcontractor Taxes and all Project Taxes. Purchaser will not be responsible for any additional charges related to tax that were not included as part of the Subcontract Price. Where applicable, Purchaser shall furnish to Subcontractor a certificate complying with state and local governmental laws, regulations and ordinances identifying any components of the Work to be considered exempt from the Project Taxes. Subcontractor shall cooperate with Purchaser to establish appropriate procedures and minimize the amount of such taxes to the extent reasonable and practical. Subcontractor is responsible for all property taxes on the construction equipment; Owner is responsible for property taxes on all other items incorporated into the project. Subcontractor shall notify Purchaser, and Purchaser shall have the right to review prior to Subcontractor's response to such document, of any correspondence with a federal or local taxing authority as it relates to sales and use, gross receipts, or excise taxes.

00572 - General Terms and Conditions

00572.1 Definitions

The terms below have the following definitions when used in this Subcontract:

"Applicable Laws" means all laws, statutes, regulations, codes, rules, treaties, ordinances, judgments, permits, decrees, approvals, interpretations, injunctions, writs, orders, or other legal requirements of a governmental body entitled to exercise any administrative, executive, judicial, legislative, police, regulatory or taxing power and having jurisdiction over the jobsite or performance of the Work.

"Claims" means claims, actions, suits, liabilities, demands, damages, losses, costs, expenses (including reasonable attorneys' fees), impacts to price, impacts to schedule, awards, fines and judgments, of every kind and nature.

"Consent Decree" means the negotiated plan between Owner, Department of Justice, Environmental Protection Agency, Tennessee department of Environment and Conservation, and the Tennessee Clean Water Network that requires Owner to develop and implement plans to improve its wastewater systems.

"Construction Schedule" means the detailed network schedule developed by Purchaser..

"Effective Date" means the date on which Purchaser releases Subcontractor to proceed with all or part of the Work, whether the release occurs under a written notice to proceed issued prior to execution of this Subcontract or by execution of this Subcontract.

"Final Completion" means for each group of five sewer point repairs as released under the Article titled "Construction Milestone Completion Dates": (a) the Work is complete and complies with the requirements of this Subcontract; and (b) Subcontractor has fulfilled all of its obligations under this Subcontract except obligations that survive completion of the Work.

"Indemnified Parties" means Owner and its officials, Purchaser, Purchaser's engineer, and the parent companies, related companies, affiliated companies, subsidiaries, successors, and assigns of each, including the shareholders, officers, directors, partners, employees, and agents of each of the above firms. "Indemnified Parties" does not include Subcontractor or any Sub-subcontractor.

"Owner" means the City of Memphis, Tennessee.

"Parties" means Purchaser and Subcontractor.

"Program Manager" means Black & Veatch Corporation or Overland Contracting Inc. (OCI)

"Purchaser" means the party so identified in the Subcontract Agreement.

"SARP10 Program Office" 3485 Poplar Avenue, Suite 230, Memphis, TN 38111

"Specifications" means Purchaser's documents describing the technical and other requirements of the Work, and the codes, standards, or specifications referenced in the documents.

"Subcontract" means the agreement between Purchaser and Subcontractor consisting of: (a) the Subcontract Agreement; (b) the documents listed in the Subcontract Agreement; (c) written Subcontract revisions; (d) attachments, appendices and exhibits to the Subcontract documents; (e) documents expressly incorporated by reference into the Subcontract; and (e) any requirements that can be reasonably inferred from any of the foregoing.

"Subcontract Agreement" means the Subcontract form executed by Purchaser and Subcontractor.

"Subcontract Price" means the total compensation to be paid to Subcontractor under this Subcontract.

"Subcontractor" means the party so identified in the Subcontract Agreement.

"Sub-subcontractor" means any party, at any tier, having an agreement with Subcontractor or with a Sub-subcontractor, to perform a portion of the Work.

"Technical Specifications" has the same meaning as "Specifications."

"US" or "USA" means the United States of America.

"Warranty Period" means a one year period of time after Final Completion is achieved, as may be extended pursuant to Article 00572.10.

"Work" means that which Subcontractor is to perform or provide under this Subcontract.

00572.2 Interpretation

00572.2.1 This Subcontract is the complete and final agreement between the parties relating to the Work. All prior or contemporaneous negotiations and agreements relating to the Work are superseded by this Subcontract. Exceptions or terms submitted by Subcontractor in the course of accepting this Subcontract are void.

00572.2.2 Provisions of this Subcontract that contemplate performance or obligations subsequent to completion or termination of the Work or contain waivers or limitations of liability will survive such completion or termination. Termination of the Work will not affect the rights and obligations that arose before termination.

00572.2.3 If any provision of this Subcontract is held to be unenforceable, the remaining provisions of this Subcontract will remain in effect.

00572.3 Subcontractor's Status

Subcontractor is an independent contractor in the performance of the Work. Subcontractor is solely responsible for the means, methods, sequences, procedures, and safety precautions used or adopted by Subcontractor and any Sub-subcontractor in the performance of the Work. Except as provided in Article 00574.2 and 00574.3, Subcontractor has sole authority and responsibility to employ, manage, discharge, and otherwise control its employees.

00572.4 Invoicing and Payment

00572.4.1 Subcontractor shall submit invoices to Purchaser with all documentation required to be submitted with the invoice. Each invoice must be itemized by the Subcontract line number. Each invoice must also clearly show the Subcontract number, the invoice number, the billing period (if applicable), the invoiced amount, retention (if applicable), and the net amount due. The final invoice must contain a copy of Purchaser's notice of Final Completion.

00572.4.2 Subcontractor agrees to provide additional itemization of the Subcontract price as Purchaser reasonably requests. If payment to Subcontractor will be on a time and material basis or a unit price basis, or if Subcontractor files a Claim under Article 00572.13, Subcontractor shall furnish Purchaser complete breakdowns and supporting information in the detail required by Purchaser to verify the accuracy of the invoiced or claimed amounts. Purchaser or Purchaser's designee may audit the aforementioned records at Purchaser's expense.

00572.4.3 Purchaser will withhold five percent retention from all invoices except the final invoice. Payment by Purchaser does not: (a) constitute approval or acceptance of any portion of the Work; (b) waive any of Purchaser's rights; or (c) relieve Subcontractor from responsibility or liability arising out of or

related to this Subcontract. Acceptance by Subcontractor of final payment constitutes a release and waiver of all Claims by Subcontractor against Indemnified Parties.

00572.4.4 Purchaser may withhold or set-off amounts due under this Subcontract on account of Claims arising out of or related to Subcontractor's breach or reasonably anticipated breach of this Subcontract.

00572.4.5 Once Work that has undergone specified QA/QC is submitted, reviewed and approved by the Program Manager, the Subcontractor's invoice will be submitted along with the Program Manager's next invoice to the Owner. The Program Manager's invoice is typically submitted during the second week of each month for work performed during the previous month. Typical payment from the Owner to the Program Manager is anticipated to be thirty (30) calendar days upon Owner's acceptance of invoice, and the Program Manager will cause the Purchaser to pay the Service Contractor within two weeks of Program Manager's receipt of payment from the Owner.

00572.5 Schedule

Performance of the Work as scheduled under this Subcontract is of the essence. Subcontractor shall give Purchaser written notice of any delay or anticipated delay within three calendar days after the occurrence of the event giving rise to the delay. Subcontractor's notice must identify the cause of the delay or the anticipated delay and the actions Subcontractor is undertaking to recover from or avoid the delay.

00572.6 Waivers of Lien

As a condition precedent to payment, Subcontractor shall furnish a lien waiver in the form of Article 00672.1 with each invoice except the final invoice. As a condition precedent to payment of the final invoice, Subcontractor shall furnish a lien waiver in the form of Article 00672.2 with the final invoice. If a lien is filed and Subcontractor does not remove or bond around the lien within seven calendar days after receipt of written notice from Purchaser or Owner, Purchaser or Owner may remove the lien. Subcontractor shall reimburse Purchaser or Owner, as applicable, for all costs and expenses incurred by Purchaser or Owner in removing the lien, including reasonable attorneys' fees and court costs.

00572.7 Assignment

Subcontractor may not assign all or part of this Subcontract voluntarily, by operation of law, or otherwise, nor may Subcontractor assign any of the money payable under this Subcontract, without obtaining Purchaser's prior written consent.

00572.8 Passage of Title, Risk of Loss, and Delivery

Subcontractor warrants that the Work (excluding Subcontractor-furnished items that are not intended to become a permanent part of the project) will be free of all liens, claims, charges, security interests, encumbrances or defects in title. Title to the Work (excluding Subcontractor-furnished items that are not intended to become a permanent part of the project) will pass to Purchaser upon the earlier of Subcontractor's receipt of payment or delivery of the Work to the jobsite. Subcontractor retains the risk of loss of the Work until Purchaser issues the notice of Final Completion. The terms of delivery have the meanings assigned them in the 2010 edition of the Incoterms published by the International Chamber of Commerce, except as modified in this Subcontract.

00572.9 Final Completion

Subcontractor shall notify Purchaser in writing when Subcontractor believes the Work meets the requirements for Final Completion. Purchaser will inspect the Work within ten calendar days after Purchaser's receipt of Subcontractor's notice. If Purchaser identifies any defective or non-conforming Work, Subcontractor shall correct that Work in accordance with Article 00572.10. Purchaser will issue a notice that Final Completion has been achieved when the Work meets the requirements for Final Completion. Purchaser's issuance of the notice of Final Completion does not relieve Subcontractor of its obligations under this Subcontract.

00572.10 Warranty

00572.10.1 Subcontractor warrants to Purchaser and Owner that the Work: (a) will be new when delivered to the jobsite; (b) will be free from defects in design, material, and workmanship; (c) will comply with Applicable Laws; (d) will comply with the requirements of this Subcontract; and (e) will be fit for the purposes specified. Subcontractor also warrants to Purchaser and Owner that elements of the Work for which this Subcontract does not establish express standards of quality and fitness will comply with good industry practices for the specific application. Subcontractor agrees that Owner may directly enforce the warranties of this Article 00572.10.1.

00572.10.2 Subcontractor shall correct any breach of this warranty within five calendar days after Purchaser gives Subcontractor written notice of the breach. The cost of warranty work and removal or replacement of other work will be at Subcontractor's expense. Subcontractor shall work diligently and without interruption to correct the breach. In the case of emergency where, in the reasonable judgment of Purchaser, delay could result in serious loss or damage to persons or property, Purchaser may correct the defect or nonconformity at Subcontractor's expense.

00572.10.3 The warranty for the Work extends until one year after Final Completion of each group of five sewer point repairs as released under the Article titled “Construction Milestone Completion Dates.” The warranty applies to all repairs and replacements to the same extent the warranty applies to the original Work. The warranty period for repaired Work or replacements will be extended for a period of one year after the repair or replacement is complete or until the original warranty period expires, whichever occurs later.

00572.10.4 Subcontractor acknowledges that Owner’s failure to achieve 100 percent compliance with the Consent Decree requirements may result in the imposition of penalties, costs , and other damages imposed against the Owner and Purchaser. To the extent caused by Subcontractor’s failure to perform the Work in accordance with this Subcontract or to the extent caused by the negligence of Subcontractor or any Sub-subcontractor. Subcontractor agrees to pay penalties and costs incurred by Owner and Purchaser under the Consent Decree.

00572.11 Compliance with Laws

00572.11.1 Subcontractor shall comply with all Applicable Laws in effect during its performance of Work, including but not limited to the City of Memphis Living Wage Ordinance, City of Memphis Prevailing Wage Ordinance, Davis Bacon, the Fair Labor Standards Act, Occupational Safety and Health Administration (OSHA), and the Americans with Disabilities Act (ADA). Subcontractor shall obtain all licenses, permits, and inspections applicable to the Work except for licenses, permits, and inspections identified in this Subcontract as Purchaser’s or Owner’s responsibility. Subcontractor shall also comply with the USA's Foreign Corrupt Practices Act.

00572.11.2 Living Wage Ordinance:
The Prime Agreement is subject to Living Wage Ordinance #5185 as amended by Ordinance #5257 (effective July 1, 2008) that requires contractors who enter into a service contract with the City of Memphis to pay employees who work under the service contract a living wage. The minimum hourly wage shall be at least $10.27 per hour with health benefits for employees and their dependents or $12.32 per hour without health benefits. Subcontractor is also subject this ordinance as a subcontractor of Purchaser performing services. Subcontractor will submit certified payrolls as required by the ordinance to Purchaser, and Purchaser will forward to Owner. Copies of the ordinances are posted on Owner’s website (www.memphistn.gov). Once on the homepage, click on the “Business” link, and then click on “Doing Business with the City” link. A link to the ordinance will be on the top right side under the section “Links”. Annual adjustments to the rates will be posted on the site for the next year in February. Davis Bacon rates shall apply only if they are higher than the City of Memphis Living Wage Ordinance. Also if the Subcontract price is higher than $500,000.00 the City of Memphis Prevailing Wage Rates applies unless the rates are lower than the Davis Bacon rates and then Davis Bacon rates would apply.

00572.11.3 Neither party shall engage in any conduct or activity in the performance of this Subcontract that constitutes a conflict of interest under Applicable Laws.

00572.12 Business Practices

00572.12.1 Subcontractor shall uphold the good name and reputation of Purchaser and shall not take any action which is intended to or which causes damage to or discredits Purchaser. Subcontractor shall not:

(a) offer to give or agree to give any director, officer, employee or agent of any potential client a gift or consideration of any kind as an inducement or reward for: (i) doing or declining to do, or for having done or declined to do, any action in relation to obtaining or executing any contract or (ii) for showing or declining to show any favor or disfavor to any person in relation to any possible project; or

(b) induce or attempt to induce any officer, servant, or agent of any private or public body to depart from his or her duties to his or her client or, in the case of any officer, servant or agent of a public body, his or her duties to the applicable public body, the applicable body politic, or both.

00572.12.2 Subcontractor shall not engage or employ, on a full, part-time or any other basis during the term of the Prime Agreement and for a period of one year after the termination or expiration, any professional or technical personnel who are or have been at any time during the term of the Prime Agreement in the employ of Owner without the explicit written consent of the Owner.

00572.12.3 Nondiscrimination:

(a) Subcontractor certifies and agrees that all persons employed by it, its affiliates, subsidiaries, or holding companies are and will be treated equally without regard to or because of race, creed, color, religion, ancestry, national origin, sexual orientation, sex, age, condition of physical or mental handicap, marital status, or political affiliation, in compliance with all Applicable Laws. Subcontractor shall certify, at Purchaser's request, that it is in full compliance with all applicable EEO rules and laws.

(b) Purchaser and Owner reserve the right to investigate any claims of illegal discrimination by Subcontractor and in the event a finding of discrimination is made and upon written notification thereof, Subcontractor shall take all necessary steps to cure and rectify such action to the reasonable satisfaction of Purchaser and Owner. Subcontractor's failure or refusal to do so shall be cause for termination of this Subcontract in accordance with the terms of this Subcontract.

00572.12.4 Purchaser is an affirmative action employer. Accordingly, the parties hereby incorporate by reference the requirements of Executive Order 11246, as amended, and the applicable regulations contained in 41 C.F.R. Parts 60-1 through 60-60; 29 U.S.C. Section 793 and the applicable regulations contained in 41 C.F.R. Part 60-741; 38 U.S.C. Section 4212 and the applicable regulations contained in 41 C.F.R. Part 60-250 and/or 60-300; and 29 C.F.R. Part 471, Appendix A to Subpart A.

00572.13 Claims

Subcontractor must give written notice, with appropriate supporting documentation, of all Claims for extra compensation or additional time for performance of the Work within five calendar days after occurrence of the event giving rise to the Claim. Subcontractor acknowledges that failure of Subcontractor to give Purchaser notice and appropriate supporting documentation within the required time frame constitutes a waiver of all Claims arising out of or related to the event.

00572.14 Subcontract Revisions and Work Authorizations

00572.14.1 Purchaser may make additions, deletions, reductions in scope, or other changes to the Work. If a proposed change will cause a material increase or decrease in Subcontractor's cost or time for performance, Subcontractor shall so notify Purchaser in writing, accompanied by supporting documentation, within three calendar days after Subcontractor's receipt of Purchaser's notice of change. If Purchaser agrees with Subcontractor's notice, the parties will negotiate an equitable adjustment to the Subcontract price, to the schedule, or both, in accordance with the Subcontractor's fee for overhead and profit as listed in Article 00572.14.2 below. These adjustments will be reflected in a written Subcontract revision. Subcontractor, however, shall proceed with the change as directed in a written Work authorization pending such agreement.

00572.14.2 The Subcontractor's fee for overhead and profit shall be determined as follows:

> For costs incurred for labor the maximum fee shall be fifteen percent to the Subcontractor or the Sub-subcontractor performing the Work.
>
> For costs incurred for materials and equipment the maximum fee shall be five percent to the Subcontractor or the Sub-subcontractor providing the materials and equipment.
>
> If applicable, the Subcontractor may receive an additional fee of five percent on labor or materials and equipment performed or provided by a Sub-subcontractor, as long as the total combined fee does not exceed fifteen percent.

00572.14.3 A written Subcontract revision is required before Subcontractor is entitled to payment for the Work performed under the Work authorization. Subcontractor will bear the expense of performing any change not supported by a written Work authorization or written Subcontract revision. Purchaser will not be liable to Subcontractor for Claims arising from a decrease in the Work. No change is effective without a written Work authorization or a written Subcontract revision issued by Purchaser.

00572.15 Non-Disclosure

Subcontractor shall not make any news releases, authorize or participate in any interview concerning this Subcontract, or issue other advertising pertaining to the project or this Subcontract without the prior written approval of Purchaser. Subcontractor shall treat all information provided by Purchaser as confidential and only disclose such information as necessary to perform the Work, and will require the employees, agents, and Subcontractors who need to know to adhere to the terms of this provision.

00572.16 Suspension of Work

Purchaser may, at any time and in its sole discretion, suspend performance of all or part of the Work by written notice to Subcontractor. If the suspension is unrelated to Subcontractor's failure to comply with this Subcontract, Purchaser will adjust the schedule to reflect the reasonable delay due to the suspension and will reimburse Subcontractor for the reasonable and direct additional costs incurred by Subcontractor due solely to the suspension. Subcontractor shall promptly resume performance of all or part of the suspended Work in accordance with Purchaser's written authorization to resume the Work.

00572.17 Termination for Cause

If Subcontractor defaults in any obligation under this Subcontract and does not cure the default within ten calendar days after receipt of Purchaser's written notice identifying the default, Purchaser may terminate all or part of the Work.

00572.18 Termination Without Cause

Purchaser may, at any time and in its sole discretion, terminate all or part of the Work. Subject to Subcontractor's compliance with this Subcontract, Subcontractor will recover from Purchaser, as the complete and final settlement for the terminated Work and all related Claims, a sum equal to

Subcontractor's direct cost for the terminated Work satisfactorily performed as of the effective date of termination, plus an allowance for reasonable overhead and profit on such direct cost.

00572.19 Not Used

00572.20 Indemnity

00572.20.1 SUBCONTRACTOR AGREES TO DEFEND, INDEMNIFY, AND HOLD HARMLESS THE INDEMNIFIED PARTIES AGAINST ANY CLAIM, LOSS, DAMAGE, EXPENSE, OR LIABILITY (INCLUDING ATTORNEYS' FEES AND COSTS OF ANY SUCCESSFUL ENFORCEMENT OF THIS INDEMNITY ARTICLE) ARISING OUT OF THE PERFORMANCE OR NON-PERFORMANCE BY SUBCONTRACTOR OR ITS SUB-SUBCONTRACTORS, OR THEIR OFFICERS, EMPLOYEES, OR AGENTS.

00572.20.2 Providing that Purchaser is not in breach of its obligation to make payments to Subcontractor for the Work, Subcontractor shall indemnify, defend and hold harmless the Indemnified Parties from any claims or mechanic's liens brought against the Indemnified Parties or against the Project as a result of the failure of Subcontractor, or those for whose acts it is responsible, to pay for any services, materials, labor, equipment, taxes or other items or obligations furnished or incurred for or in connection with the Work. Within three (3) days of receiving written notice from Purchaser that such a claim or mechanic's lien has been filed, Subcontractor shall commence to take the steps necessary to discharge said claim or lien, including, if necessary, the furnishing of a mechanic's lien bond. If Subcontractor fails to do so, Purchaser will have the right to discharge the claim or lien and hold Subcontractor liable for costs and expenses incurred, including attorneys' fees.

00572.20.3 Subcontractor will immediately notify Purchaser of any claim or suit made or filed against Subcontractor or its Sub-subcontractors in which Purchaser or Owner is named as a co-defendant.

00572.21 Insurance Requirements

00572.21.1 Subcontractor shall, at its sole cost, maintain insurance as required by this Subcontract and shall impose the obligations of this Article 00572.21.1 on all Sub-subcontractors. Subcontractor shall give Purchaser ACORD insurance certificates evidencing the required coverage by the due date identified in the Article titled "Schedule of Submittals" and as Purchaser may request from time to time. Subcontractor shall ensure the policies:

(a) Contain a provision or endorsement that the coverage will not be cancelled, materially changed, or renewal refused unless the insurer gives at least thirty calendar days prior written notice to Purchaser.

(b) Remain in effect through the warranty period if coverage is occurrence-based and remain in effect at least one year after expiration of the warranty period if coverage is claims-based.

(c) Are primary with respect to insurance covering Indemnified Parties as additional insureds. All insurance carried by Indemnified Parties will be excess insurance.

(d) Contain a waiver of all rights of subrogation by the insurance carriers in favor of Indemnified Parties.

(e) Comply with all Applicable Laws of the jurisdiction in which any part of the Work is to be performed including, but not limited to, admitted and compulsory coverage.

(f) Are rated "A-" or better by A.M. Best's "Insurance Guide and Ratings."

00572.21.2 Subcontractor shall maintain broad form commercial general liability insurance protecting Subcontractor, and Indemnified Parties as additional insureds (using endorsements CG 20 10 and CG 20

37 or their equivalent), against claims arising out of bodily injury or property damage arising from the Work. The policy must include a cross-liability or severability of interest clause, a per project aggregate endorsement, and coverage for personal injury liability, contractual liability, products and completed operations (covering lawsuits brought in the USA and the country of the jobsite), explosion, building collapse, and damage to underground property. The policy must include coverage for riggers liability if applicable to the Work. Subcontractor shall maintain policy limits of at least one million dollars for each occurrence.

00572.21.3 Subcontractor shall maintain worker's compensation insurance protecting Subcontractor against all claims under applicable worker's compensation laws, including, but not limited to, the United States Longshoremen's and Harbor Worker's Act and the Jones Act. If Subcontractor is required to maintain worker's compensation insurance in the USA, the worker's compensation insurance must contain an "all states" or "other states" endorsement. For Work performed in the USA, Subcontractor shall also maintain employer's liability insurance protecting Subcontractor against claims for injury, disease or death of employees which are not covered by the worker's compensation insurance. Subcontractor shall maintain worker's compensation policy limits as required by statute and, if applicable to this Subcontract, employer's liability policy limits of at least one million dollars for each occurrence.

00572.21.4 Subcontractor shall maintain comprehensive automobile liability insurance protecting Subcontractor, and Indemnified Parties as additional insureds, against all claims for injuries to members of the public and damage to property of others arising from the use of motor vehicles, whether owned, non-owned, or hired. Subcontractor shall maintain policy limits of at least one million dollars for each occurrence.

00572.21.5 Subcontractor shall maintain umbrella liability insurance that follows the form of the commercial general liability insurance, the employer's liability insurance and the automobile liability insurance. The umbrella liability insurance must protect Subcontractor, and Indemnified Parties as additional insureds, against claims in excess of the limits of the commercial general liability insurance, the employer's liability insurance, and the automobile liability insurance. Subcontractor shall maintain policy limits of at least four million dollars for each occurrence.

00572.22 Audit

Purchaser reserves the right to audit the records of Subcontractor.

00572.23 Governing Law and Disputes

Claims and disputes arising out of or relating to this Subcontract will be governed by the law of the State of Missouri, USA, excluding provisions that would apply the law of another jurisdiction. Pending resolution of any claim or dispute, and without prejudice to Subcontractor's rights, Subcontractor shall continue to perform as directed by Purchaser.

00572.24 Hazardous Conditions

00572.24.1 Subcontractor is not responsible for any Hazardous Conditions encountered in the performance of the Work at the Jobsite. Upon encountering any Hazardous Conditions, Subcontractor will stop services immediately in the affected area and duly notify Purchaser. For purposes of this Subcontract, Hazardous Conditions is defined as any materials, wastes, substances and chemicals deemed to be hazardous under any Applicable Law or the handling, storage, remediation, or disposal of which are regulated by Applicable Laws and applies to any hazardous or toxic substance, material, or condition present at the locations in which the Work is performed which was not brought onto such site or sites by Service Contractor for the exclusive benefit of Subcontractor.

00572.24.2 Subcontractor shall be obligated to resume the Work at the affected areas only after Owner’s expert provides it with written certification that (i) the Hazardous Conditions have been removed or rendered harmless and (ii) all necessary approvals have been obtained from all Governmental Authority having jurisdiction over the location.

00572.24.3 Subcontractor will be entitled, to an adjustment in its compensation and all times for performance of the Work to the extent Subcontractor cost or time of performance have been adversely impacted by the presence of Hazardous Conditions, subject to submission of appropriate documentation by Subcontractor and Subcontractor's duty to mitigate.

00572.25 Force Majeure

00572.25.1 If Subcontractor is delayed in the performance of the Work due to acts, omissions, conditions, events, or circumstances beyond its control, the times for performance shall be reasonably extended by on a not less than day for day basis. By way of example and not of limitation, events that will entitle Subcontractor to an extension of the times for performance include without limitation acts or omissions of Owner or Purchaser, or anyone under Owner's control (including separate contractors), Hazardous Conditions, wars, terrorism, civil unrest, actions and inactions of delay of Governmental Authorities, floods, labor disputes and unrest, unusual delay in transportation, epidemics, earthquakes, tsunami, adverse weather conditions, and acts of God.

00572.25.2 In addition to Subcontractor's right to a time extension for those events set forth above, Subcontractor shall also be entitled to an appropriate increase in the compensation due to the impacts or delays arising from such events. Subcontractor will file all claims in accordance with Article 00572.13.

00574 – Jobsite Operations Terms and Conditions

00574.1 Subcontractor Scope of Work

Except as expressly provided in this Subcontract, Subcontractor shall furnish all materials, tools, equipment, vehicles, supplies, services, labor and supervision required to perform the Work. Unless otherwise stated in this Subcontract, the Work includes unloading, off transport, hauling, receiving, storing, maintaining, protecting, erecting, installing, cleaning, adjusting, and all other work required to make the Work ready for use.

00574.2 Safety Requirements

00574.2.1 Subcontractor shall conduct all operations under this Subcontract in a manner that avoids the risk of bodily harm and damage to property. At a minimum, Subcontractor shall comply with the requirements of this Article 00574.2, Section 00575, the Loss Control Manual, and Owner's safety requirements. Subcontractor's failure to comply with the requirements of this Article 00574.2, Section 00575, the Loss Control Manual, or Owner's safety requirements constitutes a material breach of this Subcontract.

00574.2.2 When at the jobsite, Subcontractor shall continuously inspect all Work and conduct surveys of all Work areas to identify any unsafe condition and shall immediately take adequate precautions against any unsafe condition identified. Subcontractor is solely and exclusively responsible for the discovery and correction of such conditions. Subcontractor agrees that nothing contained in this Article 00574.2, Section 00575, the Loss Control Manual, or Owner's safety requirements shifts responsibility for bodily harm or damage to property sustained resulting from violation of those provisions from Subcontractor to Owner or Purchaser. Subcontractor remains solely and exclusively responsible for compliance with all safety requirements.

00574.2.3 Subcontractor shall immediately correct any unsafe condition identified by Purchaser. If, in Purchaser's sole discretion, Subcontractor has not taken sufficient precautions for the avoidance of bodily harm and damage to property, or in response to Purchaser's identification of an unsafe condition, Purchaser may stop the Work at Subcontractor's expense or implement suitable precautions at Subcontractor's expense, or both. Purchaser's right to stop the Work and to implement suitable precautions does not impose on Purchaser a duty to exercise those rights and does not relieve Subcontractor of responsibility for damage resulting from violation of this Article 00574.2, Section 00575, the Loss Control Manual, or Owner's safety requirements.

00574.2.4 Compliance with this Article 00574.2, Section 00575, the Loss Control Manual, and Owner's safety requirements is the minimum standard required of Subcontractor. Subcontractor is responsible for examining all Work-related requirements and determining whether additional or more stringent health and safety provisions are required or appropriate for the Work. Subcontractor shall notify Purchaser promptly in writing if a charge of noncompliance with this Article 00574.2, Section 00575, the Loss Control Manual or Owner's safety requirements has been filed against Subcontractor or a Sub-subcontractor in connection with the performance of the Work.

00574.3 Labor

Subcontractor shall designate a supervisor at the jobsite who has the authority to act on behalf of and to bind Subcontractor in all matters relating to or arising out of this Subcontract. The supervisor must be fluent in English. Subcontractor agrees to replace, at no cost to Purchaser, any Sub-subcontractor or any personnel of Subcontractor or Sub-subcontractor who Purchaser reasonably requests be replaced.

00574.4 Protection and Restoration of Property

00574.4.1 Subcontractor shall, at its expense, protect the Work, the environment, and all other property from hazards arising out of or relating to the Work and from natural elements. Subcontractor shall, at its expense, promptly repair or remove and replace any damage or loss and, to the extent practicable,

restore property affected by the Work to its original condition, as determined by Purchaser. Subcontractor is solely responsible for protection of the Work until Final Completion.

00574.4.2 At the completion of the Work, Subcontractor shall remove all Subcontractor-furnished items that are not intended to become a permanent part of the project from the jobsite and shall remove and deposit in Subcontractor-furnished waste facilities all scrap, trash, waste materials, and debris resulting from the Work. Subcontractor shall thoroughly remove all accumulations of dust, scraps, waste, oil, grease, weld spatter, insulation, paint, and other foreign substances resulting from performance of the Work and shall restore all surfaces affected by those substances.

00575 - Safety, Health and Accident Prevention

00575.1 Project Safety and Health Program

Purchaser will implement and coordinate the overall Project Safety and Health Program as defined in the Loss Control Manual which is available for inspection at the SARP10 Program Office.

00575.2 Safety, Health, and Accident Prevention Program

00575.2.1 Subcontractor shall implement and maintain a written Safety, Health and Accident Prevention Program specifically applicable to the Work. Subcontractor's Safety, Health and Accident Prevention Program must meet the requirements of Applicable Laws and adhere to the Project Safety and Health Program, if implemented by Purchaser. Subcontractor shall submit Subcontractor's Safety, Health and Accident Prevention Program for Purchaser's review at least thirty calendar days before starting Work at the jobsite. Purchaser's review does not relieve Subcontractor of Subcontractor's sole responsibility for safety and health in relation to the Work, nor does Purchaser's review limit Subcontractor's obligation to undertake any action necessary to establish and maintain safe working conditions relating to the Work at the jobsite. Subcontractor must include training, Master Job Hazard Analysis (JHA) and daily JSAs.

00575.2.2 Purchaser may monitor Subcontractor's safety and health performance and may require changes to Subcontractor's Safety, Health and Accident Prevention Program during the performance of the Work. Purchaser's monitoring and requirement of changes does not relieve Subcontractor of Subcontractor's sole responsibility for safety and health in relation to the Work, nor does Purchaser's monitoring and requirement of changes limit Subcontractor's obligation to undertake any action necessary to establish and maintain safe working conditions relating to the Work at the jobsite. Purchaser must approve sub-tier subcontractors prior to mobilization to the jobsite.

00575.3 Hazardous Waste Project Health and Safety Plan

00575.3.1 Subcontractor understands that the Work may involve hazardous substances or hazardous wastes. Subcontractor shall comply with all Applicable Laws, Owner's facility rules and regulations, and applicable guidance documents. Subcontractor shall prepare and implement a jobsite-specific Hazardous Waste Project Health and Safety Plan, based on Subcontractor's Safety, Health and Accident Prevention Program and all written programs required by Applicable Laws. Subcontractor is responsible for the completeness and accuracy of Subcontractor's Hazardous Waste Project Health and Safety Plan. Subcontractor shall submit Subcontractor's Hazardous Waste Project Health and Safety Plan to Purchaser at least thirty calendar days before starting Work at the jobsite and shall maintain a copy at the jobsite for review by Purchaser, Owner, and regulatory personnel.

00575.3.2 Before starting Work at the jobsite, Subcontractor shall submit written verification that:

(a) personnel assigned to the Work have received forty hour health and safety training that meets the requirements of 29 CFR 1910.120(e) or 1926.65(e);

(b) the assigned field supervisor has completed eight hours of supervisor training that meets the requirements of 29 CFR 1910.120(e)(4) or 1926.65(e)(4); and

(c) personnel assigned to the Work are participating in a medical surveillance program that meets the requirements of 29 CFR 1910.120(f) or 1926.65(f).

00575.4 Protective Clothing, Equipment and Instrumentation

Subcontractor agrees to furnish special protective clothing, respiratory protective equipment, and monitoring instrumentation as required by Applicable Laws, the project's safety-related plans and programs, and Purchaser's and Owner's rules and regulations. Subcontractor shall ensure that personnel performing Work at the jobsite properly use the clothing, equipment, and instrumentation. Subcontractor

shall furnish and maintain all safety equipment, including but not limited to, barriers, signs, warning lights, and guards necessary for adequate protection of persons and property.

00575.5 Safety and Health Representative

The Subcontractor shall identify a qualified person to be its representative for Environmental, Safety, Health & Security matters and make this person available as needed and requested by the Purchaser. The representative must have authority to correct unsafe conditions and to stop Work in the area of an unsafe condition. In addition, the representative shall routinely visit the jobsite.

00575.6 Safety and Health Goal

Subcontractor shall endeavor to attain the project's safety goal of zero injuries. Subcontractor shall maintain accurate accident and injury reports and shall furnish Purchaser a monthly summary of injuries and man-hours lost due to injuries by the third of each month. Subcontractor accident rates must be calculated monthly in accordance with the Bureau of Labor Statistics incident rate, frequency rate, and days away from work rate methods. If Subcontractor or Sub-subcontractor accident rates exceed the project's safety goal, Subcontractor shall take immediate corrective action, which may include, but is not limited to:

(a) submittal of a written corrective action plan to Purchaser by Subcontractor;

(b) additions or modifications to Subcontractor's Safety, Health and Accident Prevention Program;

(c) removal from the jobsite of any Subcontractor or Sub-subcontractor personnel not implementing or following the necessary safety and health measures; and

(d) increasing the amount of Subcontractor safety and health training.

00575.7 Drug Prevention Program

As part of the Work, Subcontractor shall assist Purchaser in administering the project requirements for a drug detection and prevention program. Subcontractor agrees that all costs for drug testing and alcohol testing are included in the Subcontract price. Subcontractor must provide evidence to Purchaser that all personnel assigned to the Work at the jobsite have passed the drug test within three calendar days of completion of the test. The drug detection and prevention program will include, but will not be limited to, the following: (a) a pre-jobsite assignment test; and (b) post-jobsite assignment tests, such as reasonable suspicion tests, post accident tests, and unannounced random drug tests of ten percent of the workforce on a monthly basis.

00672 - General Conditions Attachments

00672.1 Waiver and Release of Lien Rights

AFFIDAVIT AND PARTIAL WAIVER OF CLAIMS AND LIENS AND RELEASE OF RIGHTS FOR SUBCONTRACTORS

The undersigned, who is the _____(designate title) of _____which is the _____ (designate whether subcontractor, supplier or otherwise) for the _____ (designate the type of work, supplies or services rendered) on the improvements constructed on the premises hereafter identified, declares that his contract with _____ (General Contractor) is in the total amount of $_____ , which includes extras and all change orders to the date hereof.

The undersigned further states that as of _____ (date) the total value of work completed and material stored is $_____. Of this amount $_____ has been received (the receipt and sufficiency of which is hereby acknowledged by the undersigned including $_____ in payment of Payment Application or Invoice Number _____. A total of $_____ is being held as retainage.

In consideration of the amounts and sums received, the undersigned does hereby waive and release to the **City of Memphis (Owner)** and to _____ (General Contractor) any and all claims and liens and rights to liens upon the premises described below and upon improvements now thereon, and upon the monies or other considerations (due as of the date of the aforesaid payment application or invoices from the **City of Memphis (Owner)** or _____ (General Contractor) or from any other person, firm or corporation), said claims and liens and rights to liens being on account of labor, services, materials, fixtures or apparatus heretofore furnished by or at the request of the undersigned. The premises as to which said claims and liens and rights to liens are hereby released are identified as follows:

Project Name:
Address of Project:
City:_____ County: Shelby_____ State: TN Zip Code: _____

The undersigned further represents and warrants that he is duly authorized and empowered to sign and execute this waiver on his own behalf and on behalf of the company or business for which he is signing; that he has properly performed all work and furnished all the materials of the specified quality per plans and specifications and in a good and workmanlike manner through the date of said payment application or invoice; that he has paid for all the labor, materials, equipment, and services that he has used or supplied to the above premises through the date of said payment application or invoice; that he has no other outstanding and unpaid payment applications, invoices, retentions, holdbacks, chargebacks or unbilled work or materials against _____ (General Contractor) as of the date of the aforementioned payment application; and that any materials which have been supplied or incorporated into the above premises were either taken from his fully-paid or open stock or were fully paid for and supplied as stated on the payment application or invoice.

The undersigned further agrees to reimburse and does hold harmless and fully indemnify the **City of Memphis (Owner)** and _____ (General Contractor) for any losses or expenses should any such claims, lien or right to a lien be asserted (by the undersigned or by any laborer, materialman or subcontractor of the undersigned), including, without implied limitation, attorneys' fees incurred in the defense thereof.

The undersigned further accepts and acknowledges the receipt of the aforesaid sums in full accord and satisfaction for the aforementioned claims with full knowledge that the contractors, **City of Memphis (Owner)** and _____ (General Contractor), their successors and assigns, are relying thereon; and furthermore, the undersigned agrees to perform, now and in the future, each and every covenant and provision of this written contract or supplier's agreement (as the case may be) as modified or changed in writing with _____ (General Contractor) or any subcontractor of _____ (General Contractor) hereby acknowledging that said contract or supplier's agreement is now in full force and effect.

In addition, for and in consideration of the amounts and sums received, the undersigned hereby waives, releases and relinquishes any and all claims, rights or causes of action whatsoever arising out of or in the course of the work performed on the above-mentioned project, contract or event transpiring prior to the date hereof, excepting the right to receive payment for work performed and properly completed and retainage, if any, after the date of the above-mentioned payment application or invoices.

Signed and delivered the _____ day of _____, 20____.
Comp any_____

By:_____ _____
(Printed Name)

_____
(Signature)

Title:_____ _____

Before me, the undersigned Notary Public in and for the said County and State, personally appeared _____, and acknowledged execution of the foregoing affidavit as his voluntary act and deed and further stated that the facts recited are true of his personal knowledge.

My Commission Expires:_____
____ _____
Notary Public
Re sidence
County/State:_____

00672.2 Final Waiver and Release of Lien Rights

AFFIDAVIT AND FINAL WAIVER OF CLAIMS AND LIENS AND RELEASE OF RIGHTS FOR SUBCONTRACTORS

The undersigned, who is the _____(designate title) of _____which is the _____ (designate whether subcontractor, supplier or otherwise) for the _____ (designate the type of work, supplies or services rendered) on the improvements constructed on the premises hereafter identified, declares that his contract with _____ (General Contractor) is in the total amount of $_____ , which includes extras and all change orders to the date hereof.

The undersigned further states that as of _ _____ (date) all work on said project has been performed and completed in accordance with the plans and specifications for the project, and said work has been accomplished in accordance with the terms and conditions of his subcontract and those documents which, by reference, are a part of said subcontract. The total value of work completed and material stored is $_____. Of this amount $_____ has been received (the receipt and sufficiency of which is hereby acknowledged by the undersigned including $_____ in payment of Payment Application or Invoice Number _____. A total of $_____ is being held as retainage.

In consideration of the amounts and sums received, the undersigned does hereby waive and release to the **City of Memphis (Owner)** and to ___ _____ (General Contractor) any and all claims and liens and rights to liens upon the premises described below and upon improvements now thereon, and upon the monies or other considerations (due as of the date of the aforesaid payment application or invoices from the **City of Memphis (Owner)** or __ _____ (General Contractor) or from any other person, firm or corporation), said claims and liens and rights to liens being on account of labor, services, materials, fixtures or apparatus heretofore furnished by or at the request of the undersigned. The premises as to which said claims and liens and rights to liens are hereby released are identified as follows:

Project Name:
Address of Project:
City:_____ County: Shelby_____ State: TN_____ Zip Code: _____

The undersigned further represents and warrants that he is duly authorized and empowered to sign and execute this waiver on his own behalf and on behalf of the company or business for which he is signing; that he has properly performed all work and furnished all the materials of the specified quality per plans and specifications and in a good and workmanlike manner as required by the contract; that he has paid for all the labor, materials, equipment, and services that he has used or supplied to the above premises as required by the contract; that he has no other outstanding and unpaid payment applications, invoices, retentions, holdbacks, chargebacks or unbilled work or materials against __ _____ (General Contractor); and that any materials which have been supplied or incorporated into the above premises were either taken from his fully-paid or open stock or were fully paid for and supplied as stated on the payment application or invoice.

The undersigned further agrees to reimburse and does hold harmless and fully indemnify the **City of Memphis (Owner)** and _____ (General Contractor) for any losses or expenses should any such claims, lien or right to a lien be asserted (by the undersigned or by any laborer, materialman or subcontractor of the undersigned), including, without implied limitation, attorneys' fees incurred in the defense thereof.

The undersigned further accepts and acknowledges the receipt of the aforesaid sums in full accord and satisfaction for the aforementioned claims with full knowledge that the contractors, **City of Memphis (Owner)** and _____ (General Contractor), their successors and assigns, are relying

thereon; and furthermore, the undersigned agrees to perform, now and in the future, each and every covenant and provision of this written contract or supplier's agreement (as the case may be) as modified or changed in writing with _____ _____ (General Contractor) or any subcontractor of _____ (General Contractor) hereby acknowledging that said contract or supplier's agreement is now in full force and effect.

In addition, for and in consideration of the amounts and sums received, the undersigned hereby waives, releases and relinquishes any and all claims, rights or causes of action whatsoever arising out of or in the course of the work performed on the above-mentioned project, contract or event transpiring prior to the date hereof, except retainage, if any, after the date of the above-mentioned payment application or invoices.

Signed and delivered the _____ day of _____, 20____.
Company_____

By:_____ _____
(Printed Name)

_____
(Signature)

Title:_____ _____

Before me, the undersigned Notary Public in and for the said County and State, personally appeared _____, and acknowledged execution of the foregoing affidavit as his voluntary act and deed and further stated that the facts recited are true of his personal knowledge.

My Commission Expires:_____
____ _____
Notary Public
Residence County/State:_____

00672.3 Certificate of Nondiscrimination (1 page)

As Bidder, Contractor, or Subcontractor on Purchaser's Contract,

SARP10 Program 71.0411 Project

The undersigned states that it does not discriminate against any subcontractor, employee, or applicant for employment on the grounds of race, color, national origin or sex and, if awarded a contract for this project, agrees in performance of work:

1. Not to discriminate against any subcontractor, employee, or applicant for employment on the grounds of race, color, national original or sex;

2. To maintain payrolls of laborers and mechanics employed on this contract until three (3) years after final release and final payment by the City;

3. To require a similar certificate to be executed by each subcontractor at the time a subcontract is executed under the contract with the requirement that such subcontractor agrees to require a similar certificate of requirement on any lower tiers of subcontracts.

4. To conform to federal law, state statutes, executive orders, and local ordinances identified and listed under Non-discrimination, Section 00270.9.

____ _____

Subcontractor's Name

_____

Date

_____

Signature

_____

Printed or Typed Name and Title

<u>THIS FORM MUST BE SUBMITTED WITH THE BID OR THE BID MAY BE CONSIDERED NON-CONFORMING.</u>

00672.4 Equal Business Opportunity Program

This form must be submitted with Bidder's bid. Failure to execute and submit this documents with Bidder's bid may cause the Bid to be rejected as non-conforming. In addition, each Sub-Subcontractor must execute the form.

This Subcontract will be subject to the requirements of the City of Memphis Ordinance #5384 which establishes the Equal Business Opportunity ("EBO") Program. It is up to the Respondent to ensure that all requirements of this ordinance are met. The Ordinance may be accessed on the City's website at www.memphistn.gov under "Doing Business". The intent of the EBO Program is to increase the participation of locally owned minority and women owned business enterprises ("M/WBE"). Toward achieving this objective, the M/WBE participation goal for this solicitation is 50%. The percentage of M/WBE participation is defined as the dollar value of subcontracts awarded to certified minority and/or women business enterprises divided by the total proposed base bid amount.

Additionally, in accordance with federal executive Order 11625 and 12138, the local government must make a good faith effort to include participation from Disadvantage Business enterprises (DBE) in subagreement awards. The DBE fair share goal for this project is minimum of **2.6%** s WBE and minimum of **2.6%** MBE. **Please note Subcontractor must meet both percentages independently to satisfy the requirements.**

Executive Order 11625:
MBE minimum **2.6%**
WBE minimum **2.6%**

Executive Order 11246:
MBE minimum **32.3%**
WBE minimum **6.9%**

Participation Plan
The Participation Plan must include: (1) level and dollar amount of participation your firm anticipates to achieve in the performance of contract resulting from this RFB; (2) the type of work to be performed by the M/WBE participation; and (3) the names of the M/WBE and/or DBE firm(s) the Respondent plans to utilize in the performance of the contract resulting from this RFB.

Eligible M/WBE and/or DBE Firms
To qualify as an M/WBE firm, per the requirements of City of Memphis Ordinance #5384, a firm must be included on the City's list of certified M/WBE firms. All contractors identified as a Disadvantaged Business Enterprise (DBE) must be on the Tennessee Uniform Certification Program (TNUCP) List at the time of the bid opening.

A list of the City's eligible M/WBE firms and DBE firms may be requested from Purchaser as a guide only. If a Bidder desires to utilize an M/WBE or DBE firm not included on the list, it is the Bidder's responsibility to confirm that the desired firm is certified by the City of Memphis. Such confirmation must be obtained from the City's Contract Compliance Office, in writing, before the bid/response due date. Requests for verification must be submitted to the City's Contract Compliance Office listed below:

Mary Bright, Esq.
City of Memphis, Contract Compliance Office
125 North Main Street, Suite 546
Memphis, TN 38103
Phone: (901) 576-6210 - Fax: (901) 576-6560
Email: mary.bright@memphistn.gov

MINORITY/WOMEN BUSINESS ENTERPRISE COMPLIANCE FORM (1 page)

SUBCONTRACT TITLE: Mainline Sewer Point Repair

Project M/WBE Goal: Executive Order 11625:

MBE minimum	**2.6%**
WBE minimum	**2.6%**

Executive Order 11246:

MBE minimum	**32.3%**
WBE minimum	**6.9%**

The following sections must be completed by Bidder. A certified Sub-subcontractor or supplier is defined as a firm from the list of certified firms provided with this specification.

_____
Bidder's Name

Section A - If the Bidder is a certified firm, so indicate here with a check mark.

_____ MBE _____ WBE _____ DBE

Section B - Identify below those certified firms that will be employed as Sub-subcontractors or suppliers on this Project. By submitting this Bid, the Bidder commits to the use of the firms listed below.

$ = Show the dollar value of the subcontract to be awarded to this firm

% = Show the percentage this subcontract is of your base Bid

M/WBE = Show by inserting an M or W whether the subcontractor is an MBE or WBE

$	%	M/WBE	DBE	CERTIFIED SUBCONTR. NAME, ADDRESS, TEL. #
_____	_____	_____	____	_____
_____	_____	_____	____	_____
_____	_____	_____	____	_____
_____	_____	_____	____	_____
_____	_____	_____	____	_____
_____	_____	_____	____	_____
_____	_____	_____	____	_____

$_____ **%**_____ **= *Total M/WBE and/or DBE***

THIS FORM MUST BE SUBMITTED WITH THE BID OR THE BID MAY BE CONSIDERED NON-CONFORMING.

00672.5 Report of Disadvantaged Business Enterprise Participation Form (1 page)

PROJECT NUMBER:_____

SUBCONTRACTOR'S REPORT OF DISADVANTAGED BUSINESS ENTERPRISE PARTICIPATION

Project Name: _____ Month of _____ , 200 _____
General Contractor: _____
Contact Person: _____ Telephone: _____
Address: _____
Amount of Subcontract: $ _____ MBE %: _____ WBE %: _____

DBE Information: Circle either MBE or WBE and Complete Form.

MBE/WBE Firm Name: _____ Contact Person: _____
Date of Award: _____ Contract Value: $ _____
Completed-to-Date: $ _____ Paid-to-Date: $ _____
Work Description: _____ Telephone #: _____
Comments: _____

MBE/WBE Firm Name: _____ Contact Person: _____
Date of Award: _____ Contract Value: $ _____
Completed-to-Date: $ _____ Paid-to-Date: $ _____
Work Description: _____ Telephone #: _____
Comments: _____

MBE/WBE Firm Name: _____ Contact Person: _____
Date of Award: _____ Contract Value: $ _____
Completed-to-Date: $ _____ Paid-to-Date: $ _____
Work Description: _____ Telephone #: _____
Comments: _____

MBE/WBE Firm Name: _____ Contact Person: _____
Date of Award: _____ Contract Value: $ _____
Completed-to-Date: $ _____ Paid-to-Date: $ _____
Work Description: _____ Telephone #: _____
Comments: _____

Attach additional pages as required.

General Contractor's Signature: _____ Date: _____

00672.6 State Revolving Fund (SRF) Front-Ends (56 pages)

This Project 179821.71.0411 must maintain SRF compliance for the SARP10 Program, the SRF "Front-Ends" consisting of various forms and documents are attached herein. Furthermore, Davis Bacon is referenced within these SRF Front-Ends, and applies to the scope of Work. As a special note, the Bidder's Requirements on page 13 of 56 of the SRF Front-Ends, outlines Pre-Bid Requirements where all bidders must send certified mail and return receipts to a minimum of 10 certified DBE subcontractors, soliciting their service.

The following SRF Forms are to be submitted with your Bid and will be attached to the Subcontract:
(Please also include a signed form from each Sub-subcontractor as applicable refer to Table 00370.8 Schedule of Submittals)

1. Certification Regarding Debarment (page 2 of 56)
2. Certification Regarding Equal Employment Opportunity (page 3 of 56)
3. EPA Form 6100-3 (page 21-22 of 56)
4. EPA Form 6100-4 (page 23-24 of 56)

STATE REVOLVING FUND LOAN PROGRAM

Inserts for Specifications

Clean Water – Unsubsidized

Projects Funded with FY 2010 and After Funds

Subject	File Name
Certification Regarding Debarment	02_CertificationRegardingDebarment.pdf
Certification Regarding Equal Employment Opportunity	03_CertificationRegardingEqualEmploymentOps.pdf
Retainage – TCAs 66-34-104, 203,103	04_RetainageTCAs.pdf
Advertisement for Bids Example – DBE	05_AdvertisementForBidsExample_DBE.pdf
DBE-Guidance Document	06_DBE01_GuidanceDocument.pdf
DBE-Loan Recipient's Requirements	06_DBE02_LoanRecip_Requirements.pdf
DBE-Loan Recipient's Good Faith Effort Letter	06_DBE03_LoanRecip_GoodFaithEffortLtr.pdf
DBE-Loan Recipient's Certification Summary Form	06_DBE04_LoanRecip_CertificationSummaryForm.pdf
DBE-Bidder's Requirements	06_DBE05_BidderRequirements.pdf
DBE Form 6100-2 Contractor Receipt Letter	06_DBE06_Form6100_2_ContractorReceiptLtr.pdf
DBE Form 6100-2 Subcontractor Participation	06_DBE07_Form6100_2_SubcontractorParticipation.pdf
DBE Form 6100-3 Subcontractor Performance	06_DBE08_Form6100_3_SubcontractorPerformance.pdf
DBE Form 6100-4 Subcontractor Utilization	06_DBE09_Form6100_4_SubcontractorUtilization.pdf
DBE-Certified List	06_DBE10_CertifiedList.pdf
Davis Bacon Poster - English	08_DavisBacon_Poster_English.pdf
Davis Bacon Poster - Spanish	08_DavisBaconsigninSpanish.pdf
Project Wage Sheet - HUD-4720	08_ProjectWageSheet_HUD-4720.pdf
Wage Rate - Bidder's Guidance to Davis Bacon	08_WageRates_BidderGuidanceToDavisBacon_20110215.pdf
Wage Rate – Loan Recipient's Guidance to DavisBacon	08_WageRates_LoanRecipGuidanceToDavisBacon_20110215.pdf
Tracking and Reporting – Loan Recipient's and Contractor's Guidance	09_TrackingAndReporting_LoanRecipAndBidderGuidance_FY2010andAfter.pdf
Storm Water General Permit NOI	11_StormWater_NOI.pdf
Storm Water General Permit NOT	11_StormWater_NOT.pdf
Project Sign Detail - Clean Water – Unsubsidized	14_CWSRF_ProjectSign_Color_Unsubsidized.pdf
Project Sign Detail - Clean Water – Unsubsidized	14_CWSRF_ProjectSign_NoColor_Unsubsidized.pdf
Bid Package Submittal Requirements	15_BidPackageSubmittalRequirements.pdf
Letter In Lieu of a Site Certificate	16_LetterInLieuofaSiteCertificate.pdf
Site Certificate	16_SiteCertificate.pdf

U.S. Environmental Protection Agency

CERTIFICATION REGARDING DEBARMENT, SUSPENSION AND OTHER RESPONSIBILTITY MATTERS

The prospective participant certifies to the best of its knowledge and belief that it and its principals:

(a) Are not presently debarred, suspended, proposed for debarment, declared ineligible, or voluntarily excluded from covered transactions by any Federal department or agency;

(b) Have not within a three year period preceding this proposal been convicted of or had a civil judgement rendered against them for commission of fraud or a criminal offense in connection with obtaining, attempting to obtain, or performing a public (Federal, State, or local) transaction or contract under a public transaction; violation of Federal or State antitrust statues or commission of embezzlement, theft, forgery, bribery, falsification or destruction of records, making false statements, or receiving stolen property;

(c) Are not presently indicted for or otherwise criminally or civilly charged by a government entity (Federal, State, or local) with commission of any of the offenses enumerated in paragraph (b) of this certification; and

(d) Have not within a three-year period preceding this application/proposal had one or more public transactions (Federal, State, or local) terminated for cause or default.

I understand that a false statement on this certification may be grounds for rejection of this proposal or termination of the award. In addition, under 18 USC Sec. 1001, a false statement may result in a fine of up to $10,000 or imprisonment for up to 5 years, or both.

_____

Typed Name & Title of Authorized Representative

_____

Signature of Authorized Representative Date

____ I am unable to certify to the above statements. My explanation is attached.

CERTIFICATION BY PROPOSED PRIME OR SUBCONTRACTOR REGARDING EQUAL EMPLOYMENT OPPORTUNITY

_____

Name of Prime Contractor **Project Number**

INSTRUCTIONS

This certification is required pursuant to Executive Order 11246, Part II, Section 203 (b), 30 F.R. 12319-25). Any bidder or prospective contractor, or any of their proposed subcontractors, shall state as an initial part of the bid or negotiations of the contract whether it has participated in any previous contract or subcontract subject to the equal opportunity clause; and, if so, whether it has filed all compliance reports due under applicable instructions.

Where the certification indicated that the prime or subcontractor has not filed a compliance report due under applicable instruction, such contractor shall be required to submit a compliance report.

CONTRACTOR'S CERTIFICATION

Contractor's Name: _____

Address: _____

_____

_____

1. Bidder has participated in a previous contract or subcontract subject to the Equal Opportunity Clause. Yes ☐ No ☐

2. Compliance Reports were required to be filed in connection with such contract or subcontract. Yes ☐ No ☐

   If yes, state what reports were filed and with what agency.

   _____

3. Bidder has filed all compliance reports due under applicable instructions, including SF-100. Yes ☐ No ☐

4. If answer to Item 3 is NO, please explain in detail on reverse side of this certification.

Certification - The information above is true and complete to the best of my knowledge and belief. (A willfully false statement is punishable by law-U.S. Code, Title 18, Section 1001.)

_____

Name and title of signer (Please type)

_____ _____

Signature **Date**

EPA-R4-0017 (5-73)

TENNESSEE CODE ANNOTATED
© 2013 by The State of Tennessee
All rights reserved

*** Current through the 2012 Regular Session ***

Title 66 Property
Chapter 34 Prompt Pay Act
Part 1 General Provisions

Tenn. Code Ann. § 66-34-103 (2012)

66-34-103. Withholding of retainage -- Violations -- Penalties.

(a) All construction contracts on any project in this state, both public and private, may provide for the withholding of retainage; provided, however, that the retainage amount may not exceed five percent (5%) of the amount of the contract.

(b) The owner, whether public or private, shall release and pay all retainages for work completed pursuant to the terms of any contract to the prime contractor within ninety (90) days after completion of the work or within ninety (90) days after substantial completion of the project for work completed, whichever occurs first. As used in this subsection (b), work completed shall be construed to mean the completion of the scope of the work and all terms and conditions covered by the contract under which the retainage is being held. The prime contractor shall pay all retainages due any subcontractor within ten (10) days after receipt of the retainages from the owner. Any subcontractor receiving the retainage from the prime contractor shall pay to any subsubcontractor or material supplier all retainages due the subsubcontractor or material supplier within ten (10) days after receipt of the retainages.

(c) Any default in the making of the payments shall be subject to those remedies provided in this part.

(d) In the event that an owner or prime contractor withholds retainage that is for the use and benefit of the prime contractor or its subcontractors pursuant to § 66-34-104(a) and (b), neither the prime contractor nor any of its subcontractors shall be required to deposit additional retained funds into an escrow account in accordance with § 66-34-104(a) and (b).

(e) (1) It is an offense for a person, firm or corporation to fail to comply with subsection (a) or (b) or § 66-34-104(a).

(2) (A) A violation of this subsection (e) is a Class A misdemeanor, subject to a fine only of three thousand dollars ($3,000).

(B) Each day a person, firm or corporation fails to comply with subsection (a) or (b) or § 66-34-104(a) is a separate violation of this subsection (e).

(C) Until the violation of this subsection (e) is remediated by compliance, the punishment for each violation shall be consecutive to all other such violations.

(3) In addition to the fine imposed pursuant to subdivisions (e)(2)(A) and (B), the court shall order restitution be made to the owner of the retained funds. In determining the appropriate amount of restitution, the formula stated in § 40-35-304 shall be used.

HISTORY: Acts 2007, ch. 201, § 3; 2008, ch. 804, § 3; 2012, ch. 609, § 1.

TENNESSEE CODE ANNOTATED
© 2013 by The State of Tennessee
All rights reserved

*** Current through the 2012 Regular Session ***

Title 66 Property
Chapter 34 Prompt Pay Act
Part 1 General Provisions

Tenn. Code Ann. § 66-34-104 (2012)

66-34-104. Retention of portion of contract price in escrow -- Applicability -- Mandatory compliance.

(a) Whenever, in any contract for the improvement of real property, a certain amount or percentage of the contract price is retained, that retained amount shall be deposited in a separate, interest-bearing, escrow account with a third party which must be established upon the withholding of any retainage.

(b) As of the time of the withholding of the retained funds, the funds shall become the sole and separate property of the prime contractor or remote contractor to whom they are owed, subject to the rights of the person withholding the retainage in the event the prime contractor or remote contractor otherwise entitled to the funds defaults on or does not complete its contract.

(c) In the event that the party withholding the retained funds fails to deposit the funds into an escrow account as provided herein, such party shall be responsible for paying the owner of the retained funds an additional three hundred dollar ($300) penalty per day for each and every day that such retained funds are not deposited into such escrow account.

(d) The party with the responsibility for depositing the retained amount in a separate, interest-bearing, escrow account with a third party shall have the affirmative duty to provide written notice that it has complied with the requirements of this section to any prime contractor upon withholding the amount of retained funds from each and every application for payment, including:

(1) Identification of the name of the financial institution with whom the escrow account has been established;

(2) Account number; and

(3) Amount of retained funds that are deposited in the escrow account with the third party.

(e) Upon satisfactory completion of the contract, to be evidenced by a written release by the owner or prime contractor owing the retainage, all funds accumulated in the escrow account together with all interest on the account shall be paid immediately to the prime contractor or remote contractor to whom the funds and interest are owed.

(f) In the event the owner or prime contractor, as applicable, fails or refuses to execute the release provided for in subsection (c), then the prime contractor or remote contractor, as applicable, may seek any remedy in a court of proper jurisdiction and the person holding the fund as escrow agent shall bear no liability for the nonpayment of the fund to the prime contractor or remote contractor; provided, however, that all claims, demands, disputes, controversies, and differences that may arise between the owner, prime contractor or prime contractors, and remote contractor or remote contractors regarding the funds may be, upon written agreement of all parties concerned, settled by arbitration conducted pursuant to the Tennessee Uniform Arbitration Act, compiled in title 4, chapter 5, part 3, or the Federal

Arbitration Act, 9 U.S.C. § 1, et seq., as may be applicable.

(g) In contracts to which the state or any department, board or agency of the state, including the University of Tennessee, is a party, interest shall be paid on the retained amounts at the same rate interest is paid on the funds of local governments participating in the local government investment pool established pursuant to § 9-4-704, for the contract period.

(h) The provisions of this section shall be applicable to the state, any department, board or agency of the state, including the University of Tennessee, and all counties and municipalities and all departments, boards or agencies of the counties and municipalities, including all school and education boards, and any other subdivision of the state.

(i) This section shall be applicable to all prime contracts and all subcontracts thereunder for the improvement of real property when the contract amount of such prime contract is five hundred thousand dollars ($500,000) or greater, notwithstanding the amount of such subcontracts.

(j) Compliance with this section shall be mandatory, and may not be waived by contract.

(k) Failure to deposit the retained funds into an escrow account as provided herein, within seven (7) days' receipt of written notice regarding such failure, is a Class A misdemeanor.

HISTORY: Acts 1975, ch. 345, §§ 1-4; T.C.A., §§ 64-1148 -- 64-1151; Acts 1985, ch. 340, §§ 1, 2; 1986, ch. 551, § 9; 2007, ch. 189, § 43; 2007, ch. 201, §§ 1, 2; T.C.A. § 66-11-144; Acts 2008, ch. 804, §§ 1, 2; 2010, ch. 875, §§ 1, 2; 2012, ch. 609, §§ 2-5.

TENNESSEE CODE ANNOTATED
© 2013 by The State of Tennessee
All rights reserved

*** Current through the 2012 Regular Session ***

Title 66 Property
Chapter 34 Prompt Pay Act
Part 2 Owner/Contractor Payment

Tenn. Code Ann. § 66-34-203 (2012)

66-34-203. Withholding of payment or retainage by owner.

Nothing in this chapter shall prevent the owner from reasonably withholding payment or a portion of a payment to the contractor; provided, that such withholding is in accordance with the provisions of the written contract between the owner and the contractor. The owner may also withhold a reasonable amount of retainage as specified in the written contract between the owner and the contractor; provided, however, that the retainage amount may not exceed five percent (5%) of the amount of the contract.

HISTORY: Acts 1991, ch. 45, § 1; 2007, ch. 201, § 4.

ADVERTISEMENT FOR BIDS EXAMPLE – DBE

The {City/Town/County/Utility District/Authority} will receive separate sealed BIDS for the construction of a {water or wastewater} project at {location to deliver bid proposal} until {closing time}, local time, on {date}, and, then, at said time, publicly open and read the BIDS aloud.

The work to be bid on is as follows: {Description of work to be performed here.}

The allotted time for construction is {# of days for work to be performed} calendar days.

The information for Bidders; Bid Form; Form of Agreement; Drawings; Specifications information; Bid Bond, Performance Bond, and Payment Bond information; and other contract documents may be examined at the addresses below:

{Please type address of consulting engineer's office}

{Please type address of City/Town/Utility District/Authority}

Ms. Marilyn Robinson, Executive Director
Nashville Minority Business Office
1919 Charlotte Avenue, Suite 310
Nashville, TN 37203
(615) 255-0432

Copies of the CONTRACT DOCUMENTS may be obtained at the {name of office to pick up contract documents} Office, located at {address of office}, upon payment of $ {Amount} for each set.

Any BIDDER, upon returning the CONTRACT DOCUMENTS within {number of days} days after BID opening and in good condition, will be refunded {his/her payment or $ amount} and any non-bidder will be refunded $ {Amount}.

No bid may be withdrawn within (#) days after the scheduled time for receipt of bids.

DAVIS-BACON ACT REQUIREMENTS

This project is being funded by a State Revolving Fund loan from FY 2010 (or later) EPA Capitalization Grant Funds. The loan recipient must be in compliance with all applicable Davis-Bacon Act requirements.

DISADVANTAGED BUSINESS ENTERPRISES (DBE) REQUIREMENTS

Any contract or contracts awarded by the Owner through this invitation for bids will be funded by a State Revolving Fund (SRF) loan from the State of Tennessee. State and Federal funds will be involved in this project, and, as a result, Bidders must comply with the SRF Loan Program's Disadvantaged Business Enterprises (DBE) requirements including contacting a minimum of 10 qualified DBE sub-contractors, professional service providers, vendors, and/or suppliers by certified mail to solicit bids. The apparent successful Bidder must submit to the Owner copies of the certified letters and return receipts prior to contract award. Neither the State of Tennessee nor any of its departments, agencies, or employees is or will be a party to this Invitation for Bids or any resulting contract(s) awarded by the Owner.

SPECIAL NOTICE TO DISADVANTAGED BUSINESS ENTERPRISES (DBE) FIRMS

All qualified Disadvantaged Business Enterprises (DBE) firms desiring to bid as a General Contractor, sub-contractor, professional service provider, supplier, or equipment vendor are encouraged to contact Ms. Marilyn Robinson at the Nashville Minority Business Center office listed above to review bidding/contract documents. Qualified Disadvantaged Business Enterprises (DBE) firms may also contact {Name of the Engineer, office address, and phone number}, in order to obtain a list of prospective bidding General Contractors or to obtain copies of bidding/contract documents.

Disadvantaged Business Enterprise (DBE) Requirements
for
State Revolving Fund Loans Awarded after May 27, 2008

GUIDANCE DOCUMENT

Items included in the Guidance Document:

- **General Contract Administration Provisions Table**
- **Six Good Faith Efforts, Purpose and Definitions Table**
- **List of DBE Forms for Loans Awarded After May 27, 2008**

GENERAL CONTRACT ADMINISTRATION PROVISIONS—www.epa.gov			
Requirement	**Circumstance**	**Responsible Party:**	**Submitted To:**
A **Loan Recipient** must be notified in writing by its **Prime Contractor** prior to any termination of a **DBE Subcontractor** for convenience by the **Prime Contractor**.	Termination of a **DBE Subcontractor** for convenience by the **Prime Contractor**	**Prime Contractor**	**Loan Recipient**
A **Loan Recipient** must require its **Prime Contractor** to pay its **Subcontractor** for satisfactory performance no more than 30 days from the **Prime Contractor's** receipt of payment from the **Loan Recipient**.	**DBE Subcontractor's** satisfactory performance	**Loan Recipient** **Prime Contractor**	**DBE Subcontractor**
If a **DBE Subcontractor** fails to complete work under the subcontract for any reason, the **Loan Recipient** must require the **Prime Contractor** to employ the **Six Good Faith Efforts** (see Table below) if soliciting a replacement **Subcontractor**.	**DBE Subcontractor** fails to complete work under the subcontract for any reason and will be replaced	**Loan Recipient** **Prime Contractor**	**SRF Loan Program**
A **Loan Recipient** must require its **Prime Contractor** to employ the **Six Good Faith Efforts** (see Table below) even if the **Prime Contractor** has achieved its fair share objectives.	Employment of the **Six Good Faith Efforts**	**Loan Recipient** **Prime Contractor**	**SRF Loan Program**
Inclusion, completion, and/or transmittal of required **DBE Forms** as instructed below: **Loan Recipient Requirements** **Bidder Requirements** **DBE Participation/Certification Summary** **Advertisement for Bids and Publisher's Affidavit** 10 Certified Letters and Return Receipts to certified **DBEs** **Good Faith Letter** **Prime Contractor's Notice Letter** for EPA Form 6100-2 **EPA Form 6100-2** **EPA Form 6100-3** **EPA Form 6100-4**	---	**Loan Recipient** **Prime Contractor** **DBE Subcontractor**	See instructions below and on Forms

SIX GOOD FAITH EFFORTS—www.epa.gov	
PURPOSE	The Good Faith Efforts are required methods employed by all EPA financial assistance agreement recipients to ensure that all disadvantaged business enterprises (DBEs) have the opportunity to compete for procurements funded by EPA financial assistance dollars.
Definitions	
EFFORT 1	Ensure DBEs are made aware of contracting opportunities to the fullest extent practicable through outreach and recruitment activities. For Indian Tribal, State and Local and Government recipients, this will include placing DBEs on solicitation lists and soliciting them whenever they are potential sources.
EFFORT 2	Make information on forthcoming opportunities available to DBEs and arrange time frames for contracts and establish delivery schedules, where the requirements permit, in a way that encourages and facilitates participation by DBEs in the competitive process. This includes, whenever possible, posting solicitations for bids or proposals for a minimum of 30 calendar days before the bid or proposal closing date.
EFFORT 3	Consider in the contracting process whether firms competing for large contracts could subcontract with DBEs. For Indian Tribal, State and local Government recipients, this will include dividing total requirements when economically feasible into smaller tasks or quantities to permit maximum participation by DBEs in the competitive process.
EFFORT 4	Encourage contracting with a consortium of DBEs when a contract is too large for one of these firms to handle individually.
EFFORT 5	Use the services and assistance of the Small Business Administration (SBA) and the Minority Business Development Agency of the Department of Commerce.
EFFORT 6	If the **Prime Contractor** awards subcontracts, require the **Prime Contractor** to take the steps in the Good Faith Efforts 1 through 5 (above) and in the General Contract Administration Provisions (above).

DBE FORMS FOR SRF LOANS AWARDED AFTER MAY 27, 2008—www.epa.gov				
Form	**Requirement**	**Provided By:**	**Completed By:**	**Submitted To:**
List of certified **DBE** contractors, subcontractors, supplies vendors, equipment vendors, and service providers	Keep list with project files/information for duration of project	**SRF Loan Program**	---	---
Loan Recipient's Requirements regarding DBEs	Include this information sheet in the Information for Bidders section of bid documents	**SRF Loan Program**	---	To be included in the contract specifications book
Bidder's Requirements regarding DBEs	Include this information sheet in the Information for Bidders section of bid documents	**SRF Loan Program**	---	To be included in the contract specifications book
Loan Recipient's Certification and Summary of **DBE** Participation	To be completed and submitted with the Authority-to-Award/ Bid Package. The SRF Loan Program must be notified of any changes, additions, or deletions to the contract during construction.	**SRF Loan Program**	**Loan Recipient**	**SRF Loan Program**
Advertisement for Bids and **Publisher's Affidavit**	**DBE** solicitation information must be included in the actual advertisement for bids. A Publisher's Affidavit (signed, original, notarized certification of publication) denoting the actual published date of the advertisement will be submitted to the SRF Loan Program as part of the Authority-to-Award/Bid Package documents.	An example advertise-ment with appropriate **DBE** language is supplied to the Loan Recipient by the **SRF Loan Program**	**Loan Recipient**	A copy of the actual advertisement and a Publisher's Affidavit will be submitted to the **SRF Loan Program** as part of the Authority-to-Award/Bid Package documents
10 Certified Letters and **Return Receipts** to potential certified DBE subcontractors, supplies vendors, service providers, and/or equipment vendors	These certified letters and copies of the corresponding return mail receipts are submitted with the completed **Loan Recipient's DBE Participation and Certification Summary Form.**	**Prime Contractor and/or Loan Recipient**	**Loan Recipient**	SRF Loan Program as part of the Authority-to-Award/Bid Package documents
Good Faith Letter	If **no DBE** participation is obtained for the contract, the "Good Faith" letter must be written.	Form letter provided by the **SRF Loan Program**	**Loan Recipient**	**SRF Loan Program**

DBE FORMS FOR SRF LOANS AWARDED AFTER MAY 27, 2008—www.epa.gov				
Form	**Requirement**	**Provided By:**	**Completed By:**	**Submitted To:**
Prime Contractor's Notice Letter for EPA Form 6100-2	The **Prime Contractor** must submit the Notice Letter to verify that Form 6100-2 was supplied to all **DBE Subcontractors** participating in the contract.	**SRF Loan Program**	**Prime Contractor**	**Loan Recipient** for inclusion in the Authority-to-Award / Bid / Proposal package
EPA Form **6100-2**	**Loan Recipient** required to have **Prime Contractors** provide form to **DBE Subcontractors** This form gives a **DBE Subcontractor** the opportunity to describe the work the **DBE Subcontractor** received from the **Prime Contractor**, how much the **DBE Subcontractor** was paid, and any other concerns the **DBE Subcontractor** might have.	**Loan Recipient** **Prime Contractors**	**DBE Subcontractors**	**EPA DBE Coordinator** at the conclusion of **DBE Subcontractor** participation in the project (Address on Form)
EPA Form **6100-3**	**Loan Recipient** required to have **Prime Contractors** provide form to **DBE Subcontractors** This form captures an intended **Subcontractor's** description of work to be performed for the **Prime Contractor** and the price of the work submitted to the **Prime Contractor**.	**Loan Recipient**	**Prime Contractors** **DBE Subcontractors**	**Loan Recipient** for inclusion in the Authority-to-Award / Bid / Proposal package
EPA Form **6100-4**	**Loan Recipient** required to have **Prime Contractors** complete the form This form captures the **Prime Contractor's** intended use of an identified **DBE Subcontractor** and the estimated dollar amount of the subcontract.	**Loan Recipient**	**Prime Contractors**	**Loan Recipient** for inclusion in the Authority-to-Award / Bid / Proposal package

STATE REVOLVING FUND LOAN PROGRAM

Loan Recipient's Requirements for Solicitation and Documentation
of
Disadvantaged Business Enterprises (DBE) Participation
on State Revolving Fund (SRF) Projects

A goal-oriented system has been established to promote **Disadvantaged Business Enterprises (DBE)** participation by providing construction services, professional services, supplies, and/or equipment on SRF Loan-funded water and wastewater projects. It is the Loan Recipient's responsibility to ensure that Bidders make a good faith effort during the bidding phase to solicit for subcontractor participation by **DBE** subcontractors, service professionals, suppliers, and/or equipment vendors on all SRF-funded projects.

DEFINITIONS

DBE - Minority Business Enterprise (MBE): A qualified socially and economically disadvantaged minority-owned business certified by any State or Federal agency, such as the Tennessee Department of Transportation, U.S. EPA's Office of Small and Disadvantaged Business Utilization, or the U.S. Small Business Administration.

DBE - Women's Business Enterprise (WBE): A qualified independent business at least 51% owned by a woman or women and certified by any State or Federal agency such as the Tennessee Department of Transportation, U.S. EPA's Office of Small and Disadvantaged Business Utilization, or the U.S. Small Business Administration.

Fair-Share Goals: The MBE fair-share goal is 2.6% for construction and 5.2% for supplies, services, and equipment. The WBE fair share goal is 2.6% for construction and 5.2% for supplies, services, and equipment.

INSTRUCTIONS TO LOAN RECIPIENTS

Pre-Bid Requirements

Loan Recipients must include the SRF Loan Program's "Bidder's Requirements for Solicitation and Documentation of **DBE** Participation on SRF-Funded Projects" information sheet in the Information for Bidders section of bid documents. Loan Recipients must also ensure that Bidders take the following affirmative steps that constitute a good-faith effort to secure **DBE** participation:

- Include certified **DBEs** on solicitation lists whenever they are potential sources,
- Divide construction contracts into subcontracts, when economically feasible, to encourage maximum participation by **DBEs**,
- Establish delivery schedules, where requirements of the work permit, that encourage participation by **DBEs**,
- Use the services and assistance of the Office of Minority Business Enterprises of the U.S. Department of Commerce, or the U.S. EPA's Office of Small and Disadvantaged Business Utilization. For assistance or information, Bidders may be referred to:

Tennessee Department of Transportation
Small Business Development
505 Deaderick Street, Suite 1800
Nashville, TN 37243-0347
(615) 741-3681
http://www.tdot.state.tn.us/construction/DBE%20list/dbe_list.pdf

Mr. W. Clinton Smith, District Director
U.S. Small Business Administration
50 Vantage Way, Suite 201
Nashville, TN 37228
(615) 736-5881
http://pro-net.sba.gov/

Ms. Jeanette L. Brown, Director
U.S. Environmental Protection Agency
Office of Small and Disadvantaged Business Utilization
1200 Pennsylvania Avenue, N.W. (1230A)
Washington, D.C. 20460
(202) 564-4100 http://www.epa.gov/osdbu/

POST-BID REQUIREMENTS

Whether or not DBE participation was obtained, the Loan Recipient must complete the **"Loan Recipient's Certification and Summary"** form for every contract detailing whether or not **DBE** participation of subcontractors, professional service providers, suppliers, and/or equipment vendors was obtained. The **"Loan Recipient's Certification and Summary"** form must be submitted to the Administrative Section of the SRF Loan Program prior to the award of any construction contract(s) along with the newspaper **advertisement**, a **Publisher's Affidavit**, and **return receipts** and copies of the **certified letters** that were mailed to a minimum of 10 qualified **DBEs**.

STATE REVOLVING FUND LOAN PROGRAM

Loan Recipient's Requirements for Solicitation and Documentation
of
Disadvantaged Business Enterprises (DBE) Participation
on State Revolving Fund (SRF) Projects

If DBE participation was obtained, the **"Loan Recipient's Certification and Summary"** form must clearly indicate whether **DBE** participation was obtained from either a subcontractor, professional service provider, supplier, and/or equipment vendor participation; identify the **DBE** firm(s) to be used; and certify that the **DBE** firm(s) is a certified **DBE**. In addition to the **"Loan Recipient's Certification and Summary"** form, the Loan Recipient must include in the submittal to the SRF Loan Program, copies of the **Prime Contractor's Notice Letter for EPA Form 6100-2**, **EPA Form 6100-3**, and **EPA Form 6100-4**.

If no DBE participation was obtained, the Loan Recipient must submit a separate letter documenting that a "**good-faith effort**" was made to secure **DBE** participation. This letter is submitted along with the above-mentioned **"Loan Recipient's Certification and Summary"** form, newspaper **advertisement**, **Publisher's Affidavit**, **return receipts,** and copies of the **certified letters.** The SRF Loan Program provides a template to the Loan Recipient for this letter.

This documentation is the only form of documentation that will be accepted by the SRF Loan Program. Failure to provide the required documentation may result in a delay of the SRF Loan Program's approval of the Authority-to-Award/Bid Package, thereby delaying the award of the construction contract(s).

The Loan Recipient should direct all inquiries regarding the SRF Loan Program's requirements for **DBE** solicitation and documentation to Dr. Bagher Sami at (615) 532-0501, bagher.sami@tn.gov, or the following address:

Dr. Bagher Sami, Manager
Administrative and Financial Section
Tennessee State Revolving Fund Loan Program
WRS - Tennessee Tower, 12th Floor
312 Rosa L. Parks Avenue
Nashville, TN 37243

STATE REVOLVING FUND LOAN PROGRAM

Loan Recipient's Good Faith Effort Letter for DBE Participation

(Insert on Loan Recipient's Letterhead)

(Date)

Dr. Bagher Sami, Manager
Administrative and Financial Sections
State Revolving Fund Loan Program
William R. Snodgrass Tennessee Tower
312 Rosa L. Parks Avenue, 12th Floor
Nashville, TN 37243

RE: Good Faith Effort – Disadvantaged Business Enterprises (DBE) Participation
City/County/UD/Authority (??? County), Tennessee
Loan No. SRF/CWA/CGA/DWF/DWA/DGA 20??-???
Contract No. ????, Contract Description

Dear Dr. Sami:

This letter is to inform you that the City/County/UD/Authority did, in good faith, encourage Disadvantaged Business Enterprises (DBE) to participate in the above referenced project by placing a special notice to Disadvantaged Business Enterprises (DBE) firms in both the invitation to bid and the public advertisement for bids. The City/County/UD/Authority, through the consulting engineer, (A/E Consulting Firm), sent a copy of the invitation to bid and a set of contract documents to the Office of Minority Business Enterprises. The City/County/UD/Authority also sent certified letters, return receipts requested, to a minimum of ten (10) DBE potential subcontractors, professional service providers, suppliers, and equipment vendors requesting DBE participation through their office, A/E, or their contractor. The consulting engineer on this project is (Name), (Firm).

We have not received any DBE participation; we believe we have done a good faith effort.

If you have any questions, please don't hesitate to contact us.

Sincerely,

(Authorized Representative Name)
(Authorized Representative Title)

cc: (A/E Consultant Name and Firm)

STATE REVOLVING FUND LOAN PROGRAM

Loan Recipient's Certification and Summary
of
Disadvantaged Business Enterprises (DBE) Participation

SRF Loan Recipient: _____ SRF Loan No. _____

INSTRUCTIONS TO SRF LOAN RECIPIENTS

The SRF Loan Recipient's Authorized Representative must clearly indicate the Contractor's **Disadvantaged Business Enterprises (DBE)** participation results by placing a check in the appropriate box below. The remainder of the form must be completed if **DBE (Minority Business Enterprise-MBE or Women's Business Enterprise –WBE)** participation was obtained. The form must be signed and dated and returned to Dr. Bagher Sami of the Administrative Section of the SRF Loan Program.

The **completed Form** must be accompanied by **copies of the certified letters** sent from the selected Bidder to a minimum of 10 qualified DBE potential subcontractors, supplies vendor, services provider, and/or equipment vendors, and **copies of the corresponding return mail receipts**.

The SRF Loan Program must be notified of any changes, additions, or deletions to the contract during construction.

☐ **No, Disadvantaged Business Enterprises (DBE) participation was not obtained for this SRF-funded project.** I certify that a good-faith effort was made to solicit **DBE** participation in accordance with the four affirmative steps outlined in the SRF Loan Program's Requirements for Solicitation and Documentation of **DBE** Participation on SRF-Funded Projects. A letter documenting that a good–faith effort was made to secure **DBE** participation has been provided to the SRF Loan Program.

OR

☐ **Yes, Disadvantaged Business Enterprises (DBE) participation was obtained for this SRF-funded project.** I certify that the **DBE** firms participating in this SRF-funded project are qualified in accordance with the SRF Loan Program's Requirements for Solicitation and Documentation of **DBE** Participation on SRF-Funded Projects. Below is a listing of firms to be utilized and the amounts of their respective participation.

1. DBE type (circle one): Subcontractor, Supplies Vendor, Service Provider, Equipment Vendor
DBE Name: _____
Address: _____
Subcontract Amount: $ _____ **MBE** ____ **WBE** ____ **% of Contract $:** _____ %

2. DBE type (circle one): Subcontractor, Supplies Vendor, Service Provider, Equipment Vendor
DBE Name: _____
Address: _____
Subcontract Amount: $ _____ **MBE** ____ **WBE** ____ **% of Contract $:** _____ %

3. DBE type (circle one): Subcontractor, Supplies Vendor, Service Provider, Equipment Vendor
DBE Name: _____
Address: _____
Subcontract Amount: $ _____ **MBE** ____ **WBE** ____ **% of Contract $:** _____ %

4. DBE type (circle one): Subcontractor, Supplies Vendor, Service Provider, Equipment Vendor
DBE Name: _____
Address: _____
Subcontract Amount: $ _____ **MBE** ____ **WBE** ____ **% of Contract $:** _____ %

PARTICIPATION SUMMARY

Total SRF Loan Amount: $ _____ **Total Construction Contract Amount:** $ _____

Total MBE Participation: $ _____ **Total WBE Participation:** $ _____

_____ _____
Signature and Title of SRF Loan Recipient's Authorized Representative Date

STATE REVOLVING FUND LOAN PROGRAM

Bidder's Requirements for Solicitation and Documentation
of
Disadvantaged Business Enterprises (DBE) Participation

A goal-oriented system has been established to promote **Disadvantaged Business Enterprises (DBE)** participation by providing construction services, professional services, supplies, and/or equipment on SRF Loan-funded water and wastewater projects. It is the Bidder's responsibility to make a good faith effort to secure participation by **DBE** subcontractors, professional service providers, suppliers, and/or equipment vendors.

DEFINITIONS

DBE - Minority Business Enterprise (MBE): A qualified socially and economically disadvantaged minority-owned business certified by any State or Federal agency, such as the Tennessee Department of Transportation, U.S. EPA's Office of Small and Disadvantaged Business Utilization, or the U.S. Small Business Administration.

DBE - Women's Business Enterprise (WBE): A qualified independent business at least 51% owned by a woman or women and certified by any State or Federal agency such as the Tennessee Department of Transportation, U.S. EPA's Office of Small and Disadvantaged Business Utilization, or the U.S. Small Business Administration.

Fair-Share Goals: The MBE fair-share goal is 2.6% for construction and 5.2% for supplies, services, and equipment. The WBE fair share goal is 2.6% for construction and 5.2% for supplies, services, and equipment.

INSTRUCTIONS TO BIDDERS

Pre-Bid Requirements

All Bidders must send letters by certified mail with return receipt requested to a minimum of 10 certified **DBE** subcontractors, professional service providers, suppliers, and/or equipment vendors to solicit their subcontract participation in the work. Lists of certified **DBE** firms may be obtained from various State and Federal agencies, including the following:

Tennessee Department of Transportation
Small Business Development
505 Deaderick Street, Suite 1800
Nashville, TN 37243-0347
(615) 741-3681
http://www.tdot.state.tn.us/dbedirectinternet/Vendor.aspx

Mr. W. Clinton Smith, District Director
U.S. Small Business Administration
50 Vantage Way, Suite 201
Nashville, TN 37228
(615) 736-5881
http://pro-net.sba.gov/

U.S. Environmental Protection Agency
Office of Small and Disadvantaged Business Utilization
1200 Pennsylvania Avenue, N.W. (1230A)
Washington, D.C. 20460
(202) 564-4100
http://www.epa.gov/osdbu/

Post-Bid Requirements

Whether or not DBE participation was obtained, the successful Bidder (Prime Contractor) must maintain supporting documents such as certification lists, solicitation documents, letters of intent, contracts, etc., for the duration of the project.

If DBE participation was obtained, the apparent successful Bidder must identify to the Loan Recipient all **DBE** firms to be utilized on the contract and the respective **DBE** type--subcontractors, supplies vendors, service providers, and/or equipment vendors (see "Loan Recipient's Certification and Summary" form)**.** Copies of the State's or Federal agency's **DBE** certification list(s) identifying that the **DBE** firms are certified minority or women's business enterprises must be provided to the Loan Recipient. In addition, copies of the **Prime Contractor's Notice Letter for EPA Form 6100-2**, **EPA Form 6100-3** (to be co-completed by the Prime Contractor and each DBE subcontractor**)**, and **EPA Form 6100-4** must also be provided to the Loan Recipient prior to tentative loan award. The Prime Contractor must provide **EPA Form 6100-2** to each **DBE** utilized on the contract.

If no DBE participation was obtained by the apparent successful Bidder, it remains the responsibility of the Prime Contractor to provide documentation to the Loan Recipient, prior to contract award, that a good faith effort was made to obtain **DBE** participation. Copies of the **certified letters** sent to a minimum of 10 qualified **DBE** potential subcontractors, supplies vendors, service providers, and/or equipment vendors and the corresponding **return mail receipts** are the only documentation of a good-faith effort that will be acceptable to the Loan Recipient.

*Failure to provide the required certified letters, return receipts, State or Federal agency **DBE** certification list(s), **Prime Contractor's Notice Letter for EPA Form 6100-2**, **EPA Form 6100-3**, and **EPA Form 6100-4** to the Loan Recipient may delay the contract award until the required documentation has been provided to and accepted by the Loan Recipient.*

STATE REVOLVING FUND LOAN PROGRAM

Contractor Receipt Letter – Form 6100-2

(Please Insert on Contractor Letterhead)

(Date)

Dr. Bagher Sami, Manager
Administrative and Financial Sections
State Revolving Fund Loan Program
William R. Snodgrass Tennessee Tower
312 Rosa L. Parks Avenue, 12th Floor
Nashville, TN 37243

RE: Receipt and Distribution of EPA Form 6100-2
Disadvantaged Business Enterprise (DBE) Participation
(City/County/UD/Authority) (??? County), Tennessee
Loan No. SRF/CWA/CGA/DWF/DWA/DGA 20??-???
(Contract Name and/or Number)

Dear Dr. Sami:

This letter is to inform you the EPA Form 6100-2 was received from the (City/County/UD/Authority) and was then given to all DBE Subcontractors as required who are going to provide either construction, services, supplies, or equipment for this project.

If you have any questions concerning this notification, please contact us at (Phone No., e-mail, etc.).

Sincerely,

(Contractors Authorized Representative)
(Title)

cc: (Consulting Engineer for the contract)
(City/County/UD/Authority's Authorized Representative)

United States Environmental Protection Agency

OMB Control No: 2090-0030
Approved: 8/13/2013
Approval Expires: 8/31/2015

Disadvantaged Business Enterprise (DBE) Program
DBE Subcontractor Participation Form

An EPA Financial Assistance Agreement Recipient must require its prime contractors to provide this form to its DBE subcontractors. This form gives a DBE[1] subcontractor[2] the opportunity to describe work received and/or report any concerns regarding the EPA-funded project (e.g., in areas such as termination by prime contractor, late payments, etc.). The DBE subcontractor can, as an option, complete and submit this form to the EPA DBE Coordinator at any time during the project period of performance.

Subcontractor Name	Project Name	
Bid/ Proposal No.	Assistance Agreement ID No. (if known)	Point of Contact
Address		
Telephone No.	Email Address	
Prime Contractor Name	Issuing/Funding Entity:	

Contract Item Number	Description of Work Received from the Prime Contractor Involving Construction, Services , Equipment or Supplies	Amount Received by Prime Contractor

[1] A DBE is a Disadvantaged, Minority, or Woman Business Enterprise that has been certified by an entity from which EPA accepts certifications as described in 40 CFR 33.204-33.205 or certified by EPA. EPA accepts certifications from entities that meet or exceed EPA certification standards as described in 40 CFR 33.202.

[2] Subcontractor is defined as a company, firm, joint venture, or individual who enters into an agreement with a contractor to provide services pursuant to an EPA award of financial assistance.

United States Environmental Protection Agency

OMB Control No: 2090-0030
Approved: 8/13/2013
Approval Expires: 8/31/2015

Disadvantaged Business Enterprise (DBE) Program
DBE Subcontractor Participation Form

Please use the space below to report any concerns regarding the above EPA-funded project:

_____
_____
_____
_____
_____
_____
_____
_____
_____
_____
_____
_____
_____

Subcontractor Signature	Print Name
Title	**Date**

The public reporting and recordkeeping burden for this collection of information is estimated to average three (3) hours per response. Send comments on the Agency's need for this information, the accuracy of the provided burden estimates, and any suggested methods for minimizing respondent burden, including through the use of automated collection techniques to the Director, Collection Strategies Division, U.S. Environmental Protection Agency (2822T), 1200 Pennsylvania Ave., NW, Washington, D.C. 20460. Include the OMB control number in any correspondence. Do not send the completed form to this address.

United States Environmental Protection Agency

OMB Control No: 2090-0030
Approved: 8/13/2013
Approval Expires: 8/31/2015

Disadvantaged Business Enterprise (DBE) Program
DBE Subcontractor Performance Form

This form is intended to capture the DBE[1] subcontractor's[2] description of work to be performed and the price of the work submitted to the prime contractor. An EPA Financial Assistance Agreement Recipient must require its prime contractor to have its DBE subcontractors complete this form and include all completed forms in the prime contractors bid or proposal package.

Subcontractor Name	Project Name	
Bid/ Proposal No.	Assistance Agreement ID No. (if known)	Point of Contact
Address		
Telephone No.	Email Address	
Prime Contractor Name	Issuing/Funding Entity:	

Contract Item Number	Description of Work Submitted to the Prime Contractor Involving Construction, Services , Equipment or Supplies	Price of Work Submitted to the Prime Contractor

DBE Certified By: ___ DOT ___ SBA ___ Other: _____	Meets/ exceeds EPA certification standards? ___ YES ___ NO ___ Unknown

[1] A DBE is a Disadvantaged, Minority, or Woman Business Enterprise that has been certified by an entity from which EPA accepts certifications as described in 40 CFR 33.204-33.205 or certified by EPA. EPA accepts certifications from entities that meet or exceed EPA certification standards as described in 40 CFR 33.202.

[2] Subcontractor is defined as a company, firm, joint venture, or individual who enters into an agreement with a contractor to provide services pursuant to an EPA award of financial assistance.

United States Environmental Protection Agency

OMB Control No: 2090-0030
Approved: 8/13/2013
Approval Expires: 8/31/2015

Disadvantaged Business Enterprise (DBE) Program
DBE Subcontractor Performance Form

I certify under penalty of perjury that the forgoing statements are true and correct. Signing this form does not signify a commitment to utilize the subcontractors above. I am aware of that in the event of a replacement of a subcontractor, I will adhere to the replacement requirements set forth in 40 CFR Part 33 Section 33.302 (c).

Prime Contractor Signature	Print Name
Title	**Date**

Subcontractor Signature	Print Name
Title	**Date**

The public reporting and recordkeeping burden for this collection of information is estimated to average three (3) hours per response. Send comments on the Agency's need for this information, the accuracy of the provided burden estimates, and any suggested methods for minimizing respondent burden, including through the use of automated collection techniques to the Director, Collection Strategies Division, U.S. Environmental Protection Agency (2822T), 1200 Pennsylvania Ave., NW, Washington, D.C. 20460. Include the OMB control number in any correspondence. Do not send the completed form to this address.

United States Environmental Protection Agency

OMB Control No: 2090-0030
Approved: 8/13/2013
Approval Expires: 8/31/2015

Disadvantaged Business Enterprise (DBE) Program
DBE Subcontractor Utilization Form

This form is intended to capture the prime contractor's actual and/or anticipated use of identified certified DBE[1] subcontractors[2] and the estimated dollar amount of each subcontract. An EPA Financial Assistance Agreement Recipient must require its prime contractors to complete this form and include it in the bid or proposal package. Prime contractors should also maintain a copy of this form on file.

Prime Contractor Name		Project Name
Bid/ Proposal No.	Assistance Agreement ID No. (if known)	Point of Contact
Address		
Telephone No.		Email Address
Issuing/Funding Entity:		

I have identified potential DBE certified subcontractors	___ YES	___ NO
If yes, please complete the table below. If no, please explain:		

Subcontractor Name/ Company Name	**Company Address/ Phone/ Email**	**Est. Dollar Amt**	**Currently DBE Certified?**

Continue on back if needed

[1] A DBE is a Disadvantaged, Minority, or Woman Business Enterprise that has been certified by an entity from which EPA accepts certifications as described in 40 CFR 33.204-33.205 or certified by EPA. EPA accepts certifications from entities that meet or exceed EPA certification standards as described in 40 CFR 33.202.

[2] Subcontractor is defined as a company, firm, joint venture, or individual who enters into an agreement with a contractor to provide services pursuant to an EPA award of financial assistance.

United States Environmental Protection Agency

OMB Control No: 2090-0030
Approved: 8/13/2013
Approval Expires: 8/31/2015

Disadvantaged Business Enterprise (DBE) Program
DBE Subcontractor Utilization Form

I certify under penalty of perjury that the forgoing statements are true and correct. Signing this form does not signify a commitment to utilize the subcontractors above. I am aware of that in the event of a replacement of a subcontractor, I will adhere to the replacement requirements set forth in 40 CFR Part 33 Section 33.302 (c).

Prime Contractor Signature	Print Name
Title	**Date**

The public reporting and recordkeeping burden for this collection of information is estimated to average three (3) hours per response. Send comments on the Agency's need for this information, the accuracy of the provided burden estimates, and any suggested methods for minimizing respondent burden, including through the use of automated collection techniques to the Director, Collection Strategies Division, U.S. Environmental Protection Agency (2822T), 1200 Pennsylvania Ave., NW, Washington, D.C. 20460. Include the OMB control number in any correspondence. Do not send the completed form to this address.

TENNESSEE DEPARTMENT OF TRANSPORTATION (TDOT)

Certified Disadvantaged Business Enterprises (DBE) List

Below is the link to the Tennessee Department of Transportation (TDOT) Web Page for the Certified DBE List. This certified list is periodically updated by TDOT.

Here is the link: http://www.tdot.state.tn.us/dbedirectinternet/Vendor.aspx

EMPLOYEE RIGHTS
UNDER THE DAVIS-BACON ACT

FOR LABORERS AND MECHANICS EMPLOYED ON FEDERAL OR FEDERALLY ASSISTED CONSTRUCTION PROJECTS

THE UNITED STATES DEPARTMENT OF LABOR WAGE AND HOUR DIVISION

PREVAILING WAGES

You must be paid not less than the wage rate listed in the Davis-Bacon Wage Decision posted with this Notice for the work you perform.

OVERTIME

You must be paid not less than one and one-half times your basic rate of pay for all hours worked over 40 in a work week. There are few exceptions.

ENFORCEMENT

Contract payments can be withheld to ensure workers receive wages and overtime pay due, and liquidated damages may apply if overtime pay requirements are not met. Davis-Bacon contract clauses allow contract termination and debarment of contractors from future federal contracts for up to three years. A contractor who falsifies certified payroll records or induces wage kickbacks may be subject to civil or criminal prosecution, fines and/or imprisonment.

APPRENTICES

Apprentice rates apply only to apprentices properly registered under approved Federal or State apprenticeship programs.

PROPER PAY

If you do not receive proper pay, or require further information on the applicable wages, contact the Contracting Officer listed below:

or contact the U.S. Department of Labor's Wage and Hour Division.

For additional information:

1-866-4-USWAGE

(1-866-487-9243) TTY: 1-877-889-5627

WWW.WAGEHOUR.DOL.GOV

DERECHOS DEL EMPLEADO

BAJO LA LEY DAVIS-BACON

PARA OBREROS Y MECÁNICOS EMPLEADOS EN PROYECTOS DE CONSTRUCCIÓN FEDERAL O CON ASISTENCIA FEDERAL

LA SECCIÓN DE HORAS Y SUELDOS DEL DEPARTAMENTO DE TRABAJO DE EEUU

SALARIOS PREVALECIENTES

No se le puede pagar menos de la tasa de pago indicada en la Decisión de Salarios Davis-Bacon fijada con este Aviso para el trabajo que Ud. desempeña.

SOBRETIEMPO

Se le ha de pagar no menos de tiempo y medio de su tasa básica de pago por todas las horas trabajadas en exceso de 40 en una semana laboral. Existen pocas excepciones.

CUMPLIMIENTO

Se pueden retener pagos por contratos para asegurarse que los obreros reciban los salarios y el pago de sobretiempo debidos, y se podría aplicar daños y perjuicios si no se cumple con las exigencias del pago de sobretiempo. Las cláusulas contractuales de Davis-Bacon permiten la terminación y exclusión de contratistas para efectuar futuros contratos federales hasta tres años. El contratista que falsifique los registros certificados de las nóminas de pago o induzca devoluciones de salarios puede ser sujeto a procesamiento civil o criminal, multas y/o encarcelamiento.

APRENDICES

Las tasas de aprendices sólo se aplican a aprendices correctamente inscritos bajo programas federales o estatales aprobados.

PAGO APROPIADO

Si Ud. no recibe el pago apropiado, o precisa de información adicional sobre los salarios aplicables, póngase en contacto con el Contratista Oficial que aparece abajo:

o póngase en contacto con la Sección de Horas y Sueldos del Departamento de Trabajo de EEUU.

Para obtener información adicional:

1-866-4-USWAGE

(1-866-487-9243) TTY: 1-877-889-5627

WWW.WAGEHOUR.DOL.GOV

WHD U.S. Wage and Hour Division

Project Wage Rate Sheet

U.S. Department of Housing and Urban Development
Office of Labor Relations

PROJECT NAME:	WAGE DECISION NUMBER/MODIFICATION NUMBER:
PROJECT NUMBER:	PROJECT COUNTY:

WORK CLASSIFICATION	BASIC HOURLY RATE (BHR)	FRINGE BENEFITS	TOTAL HOURLY WAGE RATE	LABORERS FRINGE BENEFITS:		$
Bricklayers			$	GROUP #	BHR	TOTAL WAGE
Carpenters			$			$
Cement Masons			$			$
Drywall Hangers			$			$
Electricians			$			$
Iron Workers			$			$
Painters			$	OPERATORS FRINGE BENEFITS:		$
Plumbers			$	GROUP #	BHR	TOTAL WAGE
Roofers			$			$
Sheet Metal Workers			$			$
Soft Floor Layers			$			$
Tapers			$			$
Tile Setters			$	TRUCK DRIVERS FRINGE BENEFITS:		$
OTHER CLASSIFICATIONS				GROUP #	BHR	TOTAL WAGE
			$			$
			$			$
			$			$

ADDITIONAL CLASSIFICATIONS (HUD Form 4230-A)

WORK CLASSIFICATION	BASIC HOURLY RATE	FRINGE BENEFITS	TOTAL HOURLY WAGE RATE	DATE OF HUD SUBMISSION TO DOL	DATE OF DOL APPROVAL
			$		
			$		
			$		
			$		

General Decision Number: TN140135 02/07/2014 TN135

Superseded General Decision Number: TN20130135

State: Tennessee

Construction Type: Heavy
Including Water and Sewer Line Construction

County: Shelby County in Tennessee.

HEAVY CONSTRUCTION PROJECTS (including sewer/water construction).

Modification Number	Publication Date
0	01/03/2014
1	02/07/2014

ELEC0474-015 01/07/2013

	Rates	Fringes
ELECTRICIAN	$ 24.30	11.46

---

* ENGI0369-012 05/01/2013

	Rates	Fringes
Operating Engineers: Bulldozer, Crane, and Forklift	$ 24.47	10.85

LABO0386-001 05/01/2013

	Rates	Fringes
LABORER: Common or General	$ 15.60	5.35

SUTN2009-133 12/02/2009

	Rates	Fringes
LABORER: Flagger	$ 8.73	0.00
LABORER: Pipelayer	$ 11.68	0.00
OPERATOR: Backhoe/Excavator/Trackhoe	$ 16.82	0.00
OPERATOR: Loader	$ 13.50	0.00
TRUCK DRIVER: Dump Truck	$ 10.76	0.00

WELDERS - Receive rate prescribed for craft performing operation to which welding is incidental.

==========

Unlisted classifications needed for work not included within the scope of the classifications listed may be added after award only as provided in the labor standards contract clauses (29CFR 5.5 (a) (1) (ii)).

The body of each wage determination lists the classification and wage rates that have been found to be prevailing for the cited type(s) of construction in the area covered by the wage determination. The classifications are listed in alphabetical order of "identifiers" that indicate whether the particular rate is union or non-union.

Union Identifiers

An identifier enclosed in dotted lines beginning with characters other than "SU" denotes that the union classification and rate have found to be prevailing for that classification. Example: PLUM0198-005 07/01/2011. The first four letters , PLUM, indicate the international union and the four-digit number, 0198, that follows indicates the local union number or district council number where applicable , i.e., Plumbers Local 0198. The next number, 005 in the example, is an internal number used in processing the wage determination. The date, 07/01/2011, following these characters is the effective date of the most current negotiated rate/collective bargaining agreement which would be July 1, 2011 in the above example.

Union prevailing wage rates will be updated to reflect any changes in the collective bargaining agreements governing the rates.

0000/9999: weighted union wage rates will be published annually each January.

Non-Union Identifiers

Classifications listed under an "SU" identifier were derived from survey data by computing average rates and are not union rates; however, the data used in computing these rates may include both union and non-union data. Example: SULA2004-007 5/13/2010. SU indicates the rates are not union majority rates, LA indicates the State of Louisiana; 2004 is the year of the survey; and 007 is an internal number used in producing the wage determination. A 1993 or later date, 5/13/2010, indicates the classifications and rates under that identifier were issued as a General Wage Determination on that date.

Survey wage rates will remain in effect and will not change until a new survey is conducted.

WAGE DETERMINATION APPEALS PROCESS

1.) Has there been an initial decision in the matter? This can be:

* an existing published wage determination
* a survey underlying a wage determination
* a Wage and Hour Division letter setting forth a position on a wage determination matter
* a conformance (additional classification and rate) ruling

On survey related matters, initial contact, including requests for summaries of surveys, should be with the Wage and Hour Regional Office for the area in which the survey was conducted because those Regional Offices have responsibility for the Davis-Bacon survey program. If the response from this initial contact is not satisfactory, then the process described in 2.) and 3.) should be followed.

With regard to any other matter not yet ripe for the formal process described here, initial contact should be with the Branch of Construction Wage Determinations. Write to:

Branch of Construction Wage Determinations
Wage and Hour Division
U.S. Department of Labor
200 Constitution Avenue, N.W.
Washington, DC 20210

2.) If the answer to the question in 1.) is yes, then an interested party (those affected by the action) can request review and reconsideration from the Wage and Hour Administrator (See 29 CFR Part 1.8 and 29 CFR Part 7). Write to:

Wage and Hour Administrator
U.S. Department of Labor
200 Constitution Avenue, N.W.
Washington, DC 20210

The request should be accompanied by a full statement of the interested party's position and by any information (wage payment data, project description, area practice material, etc.) that the requestor considers relevant to the issue.

3.) If the decision of the Administrator is not favorable, an interested party may appeal directly to the Administrative Review Board (formerly the Wage Appeals Board). Write to:

Administrative Review Board
U.S. Department of Labor
200 Constitution Avenue, N.W.
Washington, DC 20210

4.) All decisions by the Administrative Review Board are final.

==========

END OF GENERAL DECISION

STATE REVOLVING FUND LOAN PROGRAM

Bidder's Requirements

Davis-Bacon Act Wage Determination

The Loan Recipient must ensure the bidder is in compliance with the Davis-Bacon Act as outlined below. Additionally, ten (10) days prior to the scheduled bid opening date, the wage rates need to be checked to ensure they have not changed.

The Davis-Bacon Act as amended, requires that each contract over $2,000 to which the United States or the District of Columbia is a party for the construction, alteration, or repair of public buildings or public works shall contain a clause setting forth the minimum wages to be paid to various classes of laborers and mechanics employed under the contract. Under the provisions of the Act, contractors or their subcontractors are to pay workers employed directly upon the site of the work no less than the locally prevailing wages and fringe benefits paid on projects of a similar character. The Davis-Bacon Act directs the Secretary of Labor to determine such local prevailing wage rates.

The **wage determination** (including any additional **classifications** and **wage rates** conformed) **and** a Davis-Bacon poster (WH-1321) **must be posted on the work site at all times** by the contractor and its subcontractors in a prominent and accessible place where it can be easily seen. The WH-1321 poster **may be obtained at no charge** from offices of the Wage and Hour Division.

With each **pay estimate** submitted, the contractors **must submit** a certification stating that workers have been paid the current prevailing wage rates for each classification according to the Davis-Bacon wage rate schedule currently in effect for this project.

Wage Determinations

A "wage determination" is the listing of wage rates and fringe benefit rates for each classification of laborers and mechanics which the Administrator of the Wage and Hour Division of the U.S. Department of Labor has determined to be prevailing in a given area for a particular type of construction (e.g., building, heavy, highway, or residential).

Extensions of Wage Determinations

When a general wage determination has not been awarded within 90 days after bid opening, the head of the contracting/assisting agency may request an extension of the 90 day period from the Wage and Hour Administrator. When, due to unavoidable circumstances, a project wage determination expires before award but after bid opening, the head of the contracting/assisting agency may request an extension of the expiration date of the project wage determination in the bid specifications instead of issuing a new wage determination.

Extension requests should be supported by a written finding including a brief statement of the factual support, that extension of the expiration date of the determination is necessary and proper in the public interest to prevent injustice or undue hardship or to avoid serious impairment in the conduct of Government business.

The Administrator of the Wage and Hour Division of the U.S. Department of Labor will either grant or deny the request for an extension after consideration of all the circumstances, including an examination to determine if the previously issued rates remain prevailing. If a request for the extension of a project wage determination is denied, a new wage determination will be issued to replace an expired project wage determination.

Additional information concerning the Davis-Bacon Act and current wage rate determinations can be obtained at the following sites: www.gpo.gov/davisbacon/referencemat.html and www.wdol.gov/ .

STATE REVOLVING FUND LOAN PROGRAM

Wage Rate Requirements Under FY 2010 Appropriations

3. Contract and Subcontract provisions.

(a) The Recipient shall insure that the subrecipient(s) shall insert in full in any contract in excess of $2,000 which is entered into for the actual construction, alteration and/or repair, including painting and decorating, of a treatment work under the CWSRF or a construction project under the DWSRF financed in whole or in part from Federal funds or in accordance with guarantees of a Federal agency or financed from funds obtained by pledge of any contract of a Federal agency to make a loan, grant or annual contribution (except where a different meaning is expressly indicated), and which is subject to the labor standards provisions of any of the acts listed in § 5.1 or the FY 2010 appropriation , the following clauses:

(1) Minimum wages.

(i) All laborers and mechanics employed or working upon the site of the work will be paid unconditionally and not less often than once a week, and without subsequent deduction or rebate on any account (except such payroll deductions as are permitted by regulations issued by the Secretary of Labor under the Copeland Act (29 CFR part 3)), the full amount of wages and bona fide fringe benefits (or cash equivalents thereof) due at time of payment computed at rates not less than those contained in the wage determination of the Secretary of Labor which is attached hereto and made a part hereof, regardless of any contractual relationship which may be alleged to exist between the contractor and such laborers and mechanics.

Contributions made or costs reasonably anticipated for bona fide fringe benefits under section 1(b)(2) of the Davis-Bacon Act on behalf of laborers or mechanics are considered wages paid to such laborers or mechanics, subject to the provisions of paragraph (a)(1)(iv) of this section; also, regular contributions made or costs incurred for more than a weekly period (but not less often than quarterly) under plans, funds, or programs which cover the particular weekly period, are deemed to be constructively made or incurred during such weekly period. Such laborers and mechanics shall be paid the appropriate wage rate and fringe benefits on the wage determination for the classification of work actually performed, without regard to skill, except as provided in § 5.5(a)(4). Laborers or mechanics performing work in more than one classification may be compensated at the rate specified for each classification for the time actually worked therein: Provided, That the employer's payroll records accurately set forth the time spent in each classification in which work is performed. The wage determination (including any additional classification and wage rates conformed under paragraph (a)(1)(ii) of this section) and the Davis-Bacon poster (WH-1321) shall be posted at all times by the contractor and its subcontractors at the site of the work in a prominent and accessible place where it can be easily seen by the workers.

Subrecipients may obtain wage determinations from the U.S. Department of Labor’s web site, www.dol.gov.

(ii)(A) The subrecipient(s), on behalf of EPA, shall require that any class of laborers or mechanics, including helpers, which is not listed in the wage determination and which is to be employed under the contract shall be classified in conformance with the wage determination. The State award official shall approve a request for an additional classification and wage rate and fringe benefits therefore only when the following criteria have been met:

(1) The work to be performed by the classification requested is not performed by a classification in the wage determination; and

(2) The classification is utilized in the area by the construction industry; and

(3) The proposed wage rate, including any bona fide fringe benefits, bears a reasonable relationship to the wage rates contained in the wage determination.

(B) If the contractor and the laborers and mechanics to be employed in the classification (if known), or their representatives, and the subrecipient(s) agree on the classification and wage rate (including the amount designated for fringe benefits where appropriate), documentation of the action taken and the request, including the local wage determination shall be sent by the subrecipient (s) to the State award official. The State award official will transmit the request, to the Administrator of the Wage and Hour Division, Employment Standards Administration, U.S. Department of Labor, Washington, DC 20210 and to the EPA DB Regional Coordinator concurrently. The Administrator, or an authorized representative, will approve, modify, or disapprove every additional classification request within 30 days of receipt and so advise the State award official or will notify the State award official within the 30-day period that additional time is necessary.

(C) In the event the contractor, the laborers or mechanics to be employed in the classification or their representatives, and the subrecipient(s) do not agree on the proposed classification and wage rate (including the amount designated for fringe benefits, where appropriate), the award official shall refer the request and the local wage determination, including the views of all interested parties and the recommendation of the State award official, to the Administrator for determination. The request shall be sent to the EPA DB Regional Coordinator concurrently. The Administrator, or an authorized representative, will issue a determination within 30 days of receipt of the request and so advise the contracting officer or will notify the contracting officer within the 30-day period that additional time is necessary.

(D) The wage rate (including fringe benefits where appropriate) determined pursuant to paragraphs (a)(1)(ii)(B) or (C) of this section, shall be paid to all workers performing work in the classification under this contract from the first day on which work is performed in the classification.

(iii) Whenever the minimum wage rate prescribed in the contract for a class of laborers or mechanics includes a fringe benefit which is not expressed as an hourly rate, the

contractor shall either pay the benefit as stated in the wage determination or shall pay another bona fide fringe benefit or an hourly cash equivalent thereof.

(iv) If the contractor does not make payments to a trustee or other third person, the contractor may consider as part of the wages of any laborer or mechanic the amount of any costs reasonably anticipated in providing bona fide fringe benefits under a plan or program, Provided, That the Secretary of Labor has found, upon the written request of the contractor, that the applicable standards of the Davis-Bacon Act have been met. The Secretary of Labor may require the contractor to set aside in a separate account assets for the meeting of obligations under the plan or program.

(2) Withholding. The subrecipient(s), shall upon written request of the EPA Award Official or an authorized representative of the Department of Labor, withhold or cause to be withheld from the contractor under this contract or any other Federal contract with the same prime contractor, or any other federally-assisted contract subject to Davis-Bacon prevailing wage requirements, which is held by the same prime contractor, so much of the accrued payments or advances as may be considered necessary to pay laborers and mechanics, including apprentices, trainees, and helpers, employed by the contractor or any subcontractor the full amount of wages required by the contract. In the event of failure to pay any laborer or mechanic, including any apprentice, trainee, or helper, employed or working on the site of the work, all or part of the wages required by the contract, the (Agency) may, after written notice to the contractor, sponsor, applicant, or owner, take such action as may be necessary to cause the suspension of any further payment, advance, or guarantee of funds until such violations have ceased.

(3) Payrolls and basic records.

(i) Payrolls and basic records relating thereto shall be maintained by the contractor during the course of the work and preserved for a period of three years thereafter for all laborers and mechanics working at the site of the work. Such records shall contain the name, address, and social security number of each such worker, his or her correct classification, hourly rates of wages paid (including rates of contributions or costs anticipated for bona fide fringe benefits or cash equivalents thereof of the types described in section 1(b)(2)(B) of the Davis-Bacon Act), daily and weekly number of hours worked, deductions made and actual wages paid. Whenever the Secretary of Labor has found under 29 CFR 5.5(a)(1)(iv) that the wages of any laborer or mechanic include the amount of any costs reasonably anticipated in providing benefits under a plan or program described in section 1(b)(2)(B) of the Davis-Bacon Act, the contractor shall maintain records which show that the commitment to provide such benefits is enforceable, that the plan or program is financially responsible, and that the plan or program has been communicated in writing to the laborers or mechanics affected, and records which show the costs anticipated or the actual cost incurred in providing such benefits. Contractors employing apprentices or trainees under approved programs shall maintain written evidence of the registration of apprenticeship programs and certification of trainee programs, the registration of the apprentices and trainees, and the ratios and wage rates prescribed in the applicable programs.

(ii)(A) The contractor shall submit weekly, for each week in which any contract work is performed, a copy of all payrolls to the subrecipient, that is, the entity that receives the sub-grant or loan from the State capitalization grant recipient. Such documentation shall be available on request of the State recipient or EPA. As to each payroll copy received, the subrecipient shall provide written confirmation in a form satisfactory to the State indicating whether or not the project is in compliance with the requirements of 29 CFR 5.5(a)(1) based on the most recent payroll copies for the specified week. The payrolls shall set out accurately and completely all of the information required to be maintained under 29 CFR 5.5(a)(3)(i), except that full social security numbers and home addresses shall not be included on the weekly payrolls. Instead the payrolls shall only need to include an individually identifying number for each employee (e.g., the last four digits of the employee's social security number). The required weekly payroll information may be submitted in any form desired. Optional Form WH-347 is available for this purpose from the Wage and Hour Division Web site at http://www.dol.gov/esa/whd/forms/wh347instr.htm or its successor site. The prime contractor is responsible for the submission of copies of payrolls by all subcontractors. Contractors and subcontractors shall maintain the full social security number and current address of each covered worker, and shall provide them upon request to the subrecipient(s) for transmission to the State or EPA if requested by EPA , the State, the contractor, or the Wage and Hour Division of the Department of Labor for purposes of an investigation or audit of compliance with prevailing wage requirements. It is not a violation of this section for a prime contractor to require a subcontractor to provide addresses and social security numbers to the prime contractor for its own records, without weekly submission to the subrecipient(s).

(B) Each payroll submitted shall be accompanied by a “Statement of Compliance,” signed by the contractor or subcontractor or his or her agent who pays or supervises the payment of the persons employed under the contract and shall certify the following:

(1) That the payroll for the payroll period contains the information required to be provided under § 5.5 (a)(3)(ii) of Regulations, 29 CFR part 5, the appropriate information is being maintained under § 5.5 (a)(3)(i) of Regulations, 29 CFR part 5, and that such information is correct and complete;

(2) That each laborer or mechanic (including each helper, apprentice, and trainee) employed on the contract during the payroll period has been paid the full weekly wages earned, without rebate, either directly or indirectly, and that no deductions have been made either directly or

indirectly from the full wages earned, other than permissible deductions as set forth in Regulations, 29 CFR part 3;

(3) That each laborer or mechanic has been paid not less than the applicable wage rates and fringe benefits or cash equivalents for the classification of work performed, as specified in the applicable wage determination incorporated into the contract.

(C) The weekly submission of a properly executed certification set forth on the reverse side of Optional Form WH-347 shall satisfy the requirement for submission of the "Statement of Compliance" required by paragraph (a)(3)(ii)(B) of this section.

(D) The falsification of any of the above certifications may subject the contractor or subcontractor to civil or criminal prosecution under section 1001 of title 18 and section 231 of title 31 of the United States Code.

(iii) The contractor or subcontractor shall make the records required under paragraph (a)(3)(i) of this section available for inspection, copying, or transcription by authorized representatives of the State, EPA or the Department of Labor, and shall permit such representatives to interview employees during working hours on the job. If the contractor or subcontractor fails to submit the required records or to make them available, the Federal agency or State may, after written notice to the contractor, sponsor, applicant, or owner, take such action as may be necessary to cause the suspension of any further payment, advance, or guarantee of funds. Furthermore, failure to submit the required records upon request or to make such records available may be grounds for debarment action pursuant to 29 CFR 5.12.

(4) Apprentices and trainees--

(i) Apprentices. Apprentices will be permitted to work at less than the predetermined rate for the work they performed when they are employed pursuant to and individually registered in a bona fide apprenticeship program registered with the U.S. Department of Labor, Employment and Training Administration, Office of Apprenticeship Training, Employer and Labor Services, or with a State Apprenticeship Agency recognized by the Office, or if a person is employed in his or her first 90 days of probationary employment as an apprentice in such an apprenticeship program, who is not individually registered in the program, but who has been certified by the Office of Apprenticeship Training, Employer and Labor Services or a State Apprenticeship Agency (where appropriate) to be eligible for probationary employment as an apprentice. The allowable ratio of apprentices to journeymen on the job site in any craft classification shall not be greater than the ratio permitted to the contractor as to the entire work force under the registered program. Any worker listed on a payroll at an apprentice wage rate, who is not registered or otherwise employed as stated above, shall be paid not less than the applicable wage rate on the wage determination for the classification of work actually performed. In addition, any apprentice performing work on the job site in excess of the ratio permitted under the registered program shall be paid not less than the applicable wage rate on the wage determination for the work actually performed. Where a contractor is performing construction on a project in a locality other than that in which its program is registered, the ratios and wage rates (expressed in percentages of the journeyman's hourly rate) specified in the contractor's or subcontractor's registered program shall be observed. Every apprentice must be paid at not less than the rate specified in the registered program for the apprentice's level of progress, expressed as a percentage of the journeymen hourly rate specified in the applicable wage determination. Apprentices shall be paid fringe benefits in accordance with the provisions of the apprenticeship program. If the

apprenticeship program does not specify fringe benefits, apprentices must be paid the full amount of fringe benefits listed on the wage determination for the applicable classification. If the Administrator determines that a different practice prevails for the applicable apprentice classification, fringes shall be paid in accordance with that determination. In the event the Office of Apprenticeship Training, Employer and Labor Services, or a State Apprenticeship Agency

recognized by the Office, withdraws approval of an apprenticeship program, the contractor will no longer be permitted to utilize apprentices at less than the applicable predetermined rate for the work performed until an acceptable program is approved.

(ii) Trainees. Except as provided in 29 CFR 5.16, trainees will not be permitted to work at less than the predetermined rate for the work performed unless they are employed pursuant to and individually registered in a program which has received prior approval, evidenced by formal certification by the U.S. Department of Labor, Employment and Training Administration. The ratio of trainees to journeymen on the job site shall not be greater than permitted under the plan approved by the Employment and Training Administration. Every trainee must be paid at not less than the rate specified in the approved program for the trainee's level of progress, expressed as a percentage of the journeyman hourly rate specified in the applicable wage determination. Trainees shall be paid fringe benefits in accordance with the provisions of the trainee program. If the trainee program does not mention fringe benefits, trainees shall be paid the full amount of fringe benefits listed on the wage determination unless the Administrator of the Wage and Hour Division determines that there is an apprenticeship program associated with the corresponding journeyman wage rate on the wage determination which provides for less than full fringe benefits for apprentices. Any employee listed on the payroll at a trainee rate who is not registered and participating in a training plan approved by the Employment and Training Administration shall be paid not less than the applicable wage rate on the wage determination for the classification of work actually performed. In addition, any trainee performing work on the job site in excess of the ratio permitted under the registered program shall be paid not less than the applicable wage rate on the wage determination for the work actually performed. In the event the Employment and Training Administration withdraws approval of a training program, the contractor will no longer be permitted to utilize trainees at less than the applicable predetermined rate for the work performed until an acceptable program is approved.

(iii) Equal employment opportunity. The utilization of apprentices, trainees and journeymen under this part shall be in conformity with the equal employment opportunity requirements of Executive Order 11246, as amended, and 29 CFR part 30.

(5) Compliance with Copeland Act requirements. The contractor shall comply with the requirements of 29 CFR part 3, which are incorporated by reference in this contract.

(6) Subcontracts. The contractor or subcontractor shall insert in any subcontracts the clauses contained in 29 CFR 5.5(a)(1) through (10) and such other clauses as the EPA determines may by appropriate, and also a clause requiring the subcontractors to include these clauses in any lower tier subcontracts. The prime contractor shall be responsible for

the compliance by any subcontractor or lower tier subcontractor with all the contract clauses in 29 CFR 5.5.

(7) Contract termination; debarment. A breach of the contract clauses in 29 CFR 5.5 may be grounds for termination of the contract, and for debarment as a contractor and a subcontractor as provided in 29 CFR 5.12.

(8) Compliance with Davis-Bacon and Related Act requirements. All rulings and interpretations of the Davis-Bacon and Related Acts contained in 29 CFR parts 1, 3, and 5 are herein incorporated by reference in this contract.

(9) Disputes concerning labor standards. Disputes arising out of the labor standards provisions of this contract shall not be subject to the general disputes clause of this contract. Such disputes shall be resolved in accordance with the procedures of the Department of Labor set forth in 29 CFR parts 5, 6, and 7. Disputes within the meaning of this clause include disputes between the contractor (or any of its subcontractors) and Subrecipient(s), State, EPA, the U.S. Department of Labor, or the employees or their representatives.

(10) Certification of eligibility.

(i) By entering into this contract, the contractor certifies that neither it (nor he or she) nor any person or firm who has an interest in the contractor's firm is a person or firm ineligible to be awarded Government contracts by virtue of section 3(a) of the Davis-Bacon Act or 29 CFR 5.12(a)(1).

(ii) No part of this contract shall be subcontracted to any person or firm ineligible for award of a Government contract by virtue of section 3(a) of the Davis-Bacon Act or 29 CFR 5.12(a)(1).

(iii) The penalty for making false statements is prescribed in the U.S. Criminal Code, 18 U.S.C. 1001.

4. **Contract Provision for Contracts in Excess of $100,000.**

(a) Contract Work Hours and Safety Standards Act. The subrecipient shall insert the following clauses set forth in paragraphs (a)(1), (2), (3), and (4) of this section in full in any contract in an amount in excess of $100,000 and subject to the overtime provisions of the Contract Work Hours and Safety Standards Act. These clauses shall be inserted in addition to the clauses required by Item 3, above or 29 CFR 4.6. As used in this paragraph, the terms laborers and mechanics include watchmen and guards.

(1) Overtime requirements. No contractor or subcontractor contracting for any part of the contract work which may require or involve the employment of laborers or mechanics shall require or permit any such laborer or mechanic in any workweek in which he or she is employed on such work to work in excess of forty hours in such workweek unless such

laborer or mechanic receives compensation at a rate not less than one and one-half times the basic rate of pay for all hours worked in excess of forty hours in such workweek.

(2) Violation; liability for unpaid wages; liquidated damages. In the event of any violation of the clause set forth in paragraph (a)(1) of this section the contractor and any subcontractor responsible therefore shall be liable for the unpaid wages. In addition, such contractor and subcontractor shall be liable to the United States (in the case of work done under contract for the District of Columbia or a territory, to such District or to such territory), for liquidated damages. Such liquidated damages shall be computed with respect to each individual laborer or mechanic, including watchmen and guards, employed in violation of the clause set forth in paragraph (a)(1) of this section, in the sum of $10 for each calendar day on which such individual was required or permitted to work in excess of the standard workweek of forty hours without payment of the overtime wages required by the clause set forth in paragraph (a)(1) of this section.

(3) Withholding for unpaid wages and liquidated damages. The subrecipient**,** upon written request of the EPA Award Official or an authorized representative of the Department of Labor, shall withhold or cause to be withheld, from any moneys payable on account of work performed by the contractor or subcontractor under any such contract or any other Federal contract with the same prime contractor, or any other federally-assisted contract subject to the Contract Work Hours and Safety Standards Act, which is held by the same prime contractor, such sums as may be determined to be necessary to satisfy any liabilities of such contractor or subcontractor for unpaid wages and liquidated damages as provided in the clause set forth in paragraph (b)(2) of this section.

(4) Subcontracts. The contractor or subcontractor shall insert in any subcontracts the clauses set forth in paragraph (a)(1) through (4) of this section and also a clause requiring the subcontractors to include these clauses in any lower tier subcontracts. The prime contractor shall be responsible for compliance by any subcontractor or lower tier subcontractor with the clauses set forth in paragraphs (a)(1) through (4) of this section.

(b) In addition to the clauses contained in Item 3, above, in any contract subject only to the Contract Work Hours and Safety Standards Act and not to any of the other statutes cited in 29 CFR 5.1, the Subrecipient shall insert a clause requiring that the contractor or subcontractor shall maintain payrolls and basic payroll records during the course of the work and shall preserve them for a period of three years from the completion of the contract for all laborers and mechanics, including guards and watchmen, working on the contract. Such records shall contain the name and address of each such employee, social security number, correct classifications, hourly rates of wages paid, daily and weekly number of hours worked, deductions made, and actual wages paid. Further, the Subrecipient shall insert in any such contract a clause providing hat the records to be maintained under this paragraph shall be made available by the contractor or subcontractor for inspection, copying, or transcription by authorized representatives of the (write the name of agency) and the Department of Labor, and the contractor or subcontractor will permit such representatives to interview employees during working hours on the job.

STATE REVOLVING FUND LOAN PROGRAM

Loan Recipient's Requirements

Davis-Bacon Act Wage Determination

The Loan Recipient must ensure the bidder is in compliance with the Davis-Bacon Act as outlined below. Additionally, ten (10) days prior to the scheduled bid opening date, the wage rates need to be checked to ensure they have not changed.

The Davis-Bacon Act as amended, requires that each contract over $2,000 to which the United States or the District of Columbia is a party for the construction, alteration, or repair of public buildings or public works shall contain a clause setting forth the minimum wages to be paid to various classes of laborers and mechanics employed under the contract. Under the provisions of the Act, contractors or their subcontractors are to pay workers employed directly upon the site of the work no less than the locally prevailing wages and fringe benefits paid on projects of a similar character. The Davis-Bacon Act directs the Secretary of Labor to determine such local prevailing wage rates.

The specifications must incorporate a clause stating that the current Davis-Bacon wage rate is required **(**with the Davis-Bacon links and information).

The Bid Advertisement **must include** a clause that the **Davis-Bacon wage rates** are a requirement. (Refer to the ADVERTISEMENT FOR BIDS EXAMPLE – DBE, ARRA)

If modifications to the existing **wage rates** occur **ten (10) days** prior to the Bid Opening Date, the Loan Recipient **must** incorporate the proper **wage rates** into the plans and specifications by Addendum. All Bidders **must** be informed that this addendum **must** be incorporated into the plans and specifications that they have received.

However, if these modifications occur **less than ten (10) days** prior to the Bid Opening Date, these modifications **shall be effective unless** the agency **finds** that there is not a reasonable time still available before the Bid Opening to notify bidders of the modifications. (A report of this **finding** shall be inserted in the contract file.)

The **wage determination** (including any additional **classifications** and **wage rates** conformed) **and** a Davis-Bacon poster (WH-1321) **must be posted on the work site at all times** by the contractor and its subcontractors in a prominent and accessible place where it can be easily seen. The WH-1321 poster **may be obtained at no charge** from offices of the Wage and Hour Division.

With each **pay estimate** submitted, the contractors **must** certify that workers have been paid the current prevailing wage rates for each classification according to the Davis-Bacon wage rate schedule currently in effect for this project.

The loan recipients **must keep a file** in which all documentation **must be filed** for the current classifications and wage rates (under the Davis-Bacon Act) for the construction of their projects. This file must be kept for three (3) years after the project is completed and **will** be subject to audit by the State of Tennessee and the Environmental Protection Agency (EPA).

Wage Determinations

A "wage determination" is the listing of wage rates and fringe benefit rates for each classification of laborers and mechanics which the Administrator of the Wage and Hour Division of the U.S. Department of Labor has determined to be prevailing in a given area for a particular type of construction (e.g., building, heavy, highway, or residential).

Extensions of Wage Determinations

When a general wage determination has not been awarded within 90 days after bid opening, the head of the contracting/assisting agency may request an extension of the 90 day period from the Wage and Hour Administrator. When, due to unavoidable circumstances, a project wage determination expires before award but after bid opening, the head of the contracting/assisting agency may request an extension of the expiration date of the project wage determination in the bid specifications instead of issuing a new wage determination.

Extension requests should be supported by a written finding including a brief statement of the factual support, that extension of the expiration date of the determination is necessary and proper in the public interest to prevent injustice or undue hardship or to avoid serious impairment in the conduct of Government business.

The Administrator of the Wage and Hour Division of the U.S. Department of Labor will either grant or deny the request for an extension after consideration of all the circumstances, including an examination to determine if the previously issued rates remain prevailing. If a request for the extension of a project wage determination is denied, a new wage determination will be issued to replace an expired project wage determination.

Additional information concerning the Davis-Bacon Act and current wage rate determinations can be obtained at the following sites: www.gpo.gov/davisbacon/referencemat.html and www.wdol.gov/ .

Wage Rate Requirements Under FY 2010 Appropriations

3. Contract and Subcontract provisions.

(a) The Recipient shall insure that the subrecipient(s) shall insert in full in any contract in excess of $2,000 which is entered into for the actual construction, alteration and/or repair, including painting and decorating, of a treatment work under the CWSRF or a construction project under the DWSRF financed in whole or in part from Federal funds or in accordance with guarantees of a Federal agency or financed from funds obtained by pledge of any contract of a Federal agency to make a loan, grant or annual contribution (except where a different meaning is expressly indicated), and which is subject to the labor standards provisions of any of the acts listed in § 5.1 or the FY 2010 appropriation , the following clauses:

(1) Minimum wages.

(i) All laborers and mechanics employed or working upon the site of the work will be paid unconditionally and not less often than once a week, and without subsequent deduction or rebate on any account (except such payroll deductions as are permitted by regulations issued by the Secretary of Labor under the Copeland Act (29 CFR part 3)), the full amount of wages and bona fide fringe benefits (or cash equivalents thereof) due at time of payment computed at rates not less than those contained in the wage determination of the Secretary of Labor which is attached hereto and made a part hereof, regardless of any contractual relationship which may be alleged to exist between the contractor and such laborers and mechanics.

Contributions made or costs reasonably anticipated for bona fide fringe benefits under section 1(b)(2) of the Davis-Bacon Act on behalf of laborers or mechanics are considered wages paid to such laborers or mechanics, subject to the provisions of paragraph (a)(1)(iv) of this section; also, regular contributions made or costs incurred for more than a weekly period (but not less often than quarterly) under plans, funds, or programs which cover the particular weekly period, are deemed to be constructively made or incurred during such weekly period. Such laborers and mechanics shall be paid the appropriate wage rate and fringe benefits on the wage determination for the classification of work actually performed, without regard to skill, except as provided in §

5.5(a)(4). Laborers or mechanics performing work in more than one classification may be compensated at the rate specified for each classification for the time actually worked therein: Provided, That the employer's payroll records accurately set forth the time spent in each classification in which work is performed. The wage determination (including any additional classification and wage rates conformed under paragraph (a)(1)(ii) of this section) and the Davis-Bacon poster (WH-1321) shall be posted at all times by the contractor and its subcontractors at the site of the work in a prominent and accessible place where it can be easily seen by the workers.

Subrecipients may obtain wage determinations from the U.S. Department of Labor's web site, www.dol.gov.

(ii)(A) The subrecipient(s), on behalf of EPA, shall require that any class of laborers or mechanics, including helpers, which is not listed in the wage determination and which is to be employed under the contract shall be classified in conformance with the wage determination. The State award official shall approve a request for an additional classification and wage rate and fringe benefits therefore only when the following criteria have been met:

(1) The work to be performed by the classification requested is not performed by a classification in the wage determination; and

(2) The classification is utilized in the area by the construction industry; and

(3) The proposed wage rate, including any bona fide fringe benefits, bears a reasonable relationship to the wage rates contained in the wage determination.

(B) If the contractor and the laborers and mechanics to be employed in the classification (if known), or their representatives, and the subrecipient(s) agree on the classification and wage rate (including the amount designated for fringe benefits where appropriate), documentation of the action taken and the request, including the local wage determination shall be sent by the subrecipient (s) to the State award official. The State award official will transmit the request, to the Administrator of the Wage and Hour Division, Employment Standards Administration, U.S. Department of Labor, Washington, DC 20210 and to the EPA DB Regional Coordinator concurrently. The Administrator, or an authorized representative, will approve, modify, or disapprove every additional classification request within 30 days of receipt and so advise the State award official or will notify the State award official within the 30-day period that additional time is necessary.

(C) In the event the contractor, the laborers or mechanics to be employed in the classification or their representatives, and the subrecipient(s) do not agree on the proposed classification and wage rate (including the amount designated for fringe benefits, where appropriate), the award official shall refer the request and the local wage determination, including the views of all interested parties and the recommendation of the State award official, to the Administrator for determination. The request shall be sent to the EPA DB Regional Coordinator concurrently. The Administrator, or an authorized representative, will issue a determination within 30 days of receipt of the request and so advise the contracting officer or will notify the contracting officer within the 30-day period that additional time is necessary.

(D) The wage rate (including fringe benefits where appropriate) determined pursuant to paragraphs (a)(1)(ii)(B) or (C) of this section, shall be paid to all workers performing work in the classification under this contract from the first day on which work is performed in the classification.

(iii) Whenever the minimum wage rate prescribed in the contract for a class of laborers or mechanics includes a fringe benefit which is not expressed as an hourly rate, the

contractor shall either pay the benefit as stated in the wage determination or shall pay another bona fide fringe benefit or an hourly cash equivalent thereof.

(iv) If the contractor does not make payments to a trustee or other third person, the contractor may consider as part of the wages of any laborer or mechanic the amount of any costs reasonably anticipated in providing bona fide fringe benefits under a plan or program, Provided, That the Secretary of Labor has found, upon the written request of the contractor, that the applicable standards of the Davis-Bacon Act have been met. The Secretary of Labor may require the contractor to set aside in a separate account assets for the meeting of obligations under the plan or program.

(2) Withholding. The subrecipient(s), shall upon written request of the EPA Award Official or an authorized representative of the Department of Labor, withhold or cause to be withheld from the contractor under this contract or any other Federal contract with the same prime contractor, or any other federally-assisted contract subject to Davis-Bacon prevailing wage requirements, which is held by the same prime contractor, so much of the accrued payments or advances as may be considered necessary to pay laborers and mechanics, including apprentices, trainees, and helpers, employed by the contractor or any subcontractor the full amount of wages required by the contract. In the event of failure to pay any laborer or mechanic, including any apprentice, trainee, or helper, employed or working on the site of the work, all or part of the wages required by the contract, the (Agency) may, after written notice to the contractor, sponsor, applicant, or owner, take such action as may be necessary to cause the suspension of any further payment, advance, or guarantee of funds until such violations have ceased.

(3) Payrolls and basic records.

(i) Payrolls and basic records relating thereto shall be maintained by the contractor during the course of the work and preserved for a period of three years thereafter for all laborers and mechanics working at the site of the work. Such records shall contain the name, address, and social security number of each such worker, his or her correct classification, hourly rates of wages paid (including rates of contributions or costs anticipated for bona fide fringe benefits or cash equivalents thereof of the types described in section 1(b)(2)(B) of the Davis-Bacon Act), daily and weekly number of hours worked, deductions made and actual wages paid. Whenever the Secretary of Labor has found under 29 CFR 5.5(a)(1)(iv) that the wages of any laborer or mechanic include the amount of any costs reasonably anticipated in providing benefits under a plan or program described in section 1(b)(2)(B) of the Davis-Bacon Act, the contractor shall maintain records which show that the commitment to provide such benefits is enforceable, that the plan or program is financially responsible, and that the plan or program has been communicated in writing to the laborers or mechanics affected, and records which show the costs anticipated or the actual cost incurred in providing such benefits. Contractors employing apprentices or trainees under approved programs shall maintain written evidence of the registration of apprenticeship programs and certification of trainee programs, the registration of the apprentices and trainees, and the ratios and wage rates prescribed in the applicable programs.

(ii)(A) The contractor shall submit weekly, for each week in which any contract work is performed, a copy of all payrolls to the subrecipient, that is, the entity that receives the sub-grant or loan from the State capitalization grant recipient. Such documentation shall be available on request of the State recipient or EPA. As to each payroll copy received, the subrecipient shall provide written confirmation in a form satisfactory to the State indicating whether or not the project is in compliance with the requirements of 29 CFR 5.5(a)(1) based on the most recent payroll copies for the specified week. The payrolls shall set out accurately and completely all of the information required to be maintained under 29 CFR 5.5(a)(3)(i), except that full social security numbers and home addresses shall not be included on the weekly payrolls. Instead the payrolls shall only need to include an individually identifying number for each employee (e.g.,

the last four digits of the employee's social security number). The required weekly payroll information may be submitted in any form desired. Optional Form WH-347 is available for this purpose from the Wage and Hour Division Web site at http://www.dol.gov/esa/whd/forms/wh347instr.htm or its successor site. The prime contractor is responsible for the submission of copies of payrolls by all subcontractors. Contractors and subcontractors shall maintain the full social security number and current address of each covered worker, and shall provide them upon request to the subrecipient(s) for transmission to the State or EPA if requested by EPA , the State, the contractor, or the Wage and Hour Division of the Department of Labor for purposes of an investigation or audit of compliance with prevailing wage requirements. It is not a violation of this section for a prime contractor to require a subcontractor to provide addresses and social security numbers to the prime contractor for its own records, without weekly submission to the subrecipient(s).

(B) Each payroll submitted shall be accompanied by a "Statement of Compliance," signed by the contractor or subcontractor or his or her agent who pays or supervises the payment of the persons employed under the contract and shall certify the following:

(1) That the payroll for the payroll period contains the information required to be provided under § 5.5 (a)(3)(ii) of Regulations, 29 CFR part 5, the appropriate information is being maintained under § 5.5 (a)(3)(i) of Regulations, 29 CFR part 5, and that such information is correct and complete;

(2) That each laborer or mechanic (including each helper, apprentice, and trainee) employed on the contract during the payroll period has been paid the full weekly wages earned, without rebate, either directly or indirectly, and that no deductions have been made either directly or indirectly from the full wages earned, other than permissible deductions as set forth in Regulations, 29 CFR part 3;

(3) That each laborer or mechanic has been paid not less than the applicable wage rates and fringe benefits or cash equivalents for the classification of work performed, as specified in the applicable wage determination incorporated into the contract.

(C) The weekly submission of a properly executed certification set forth on the reverse side of Optional Form WH-347 shall satisfy the requirement for submission of the "Statement of Compliance" required by paragraph (a)(3)(ii)(B) of this section.

(D) The falsification of any of the above certifications may subject the contractor or subcontractor to civil or criminal prosecution under section 1001 of title 18 and section 231 of title 31 of the United States Code.

(iii) The contractor or subcontractor shall make the records required under paragraph (a)(3)(i) of this section available for inspection, copying, or transcription by authorized representatives of the State, EPA or the Department of Labor, and shall permit such representatives to interview employees during working hours on the job. If the contractor or subcontractor fails to submit the required records or to make them available, the Federal agency or State may, after written notice to the contractor, sponsor, applicant, or owner, take such action as may be necessary to cause the suspension of any further payment, advance, or guarantee of funds. Furthermore, failure to submit the required records upon request or to make such records available may be grounds for debarment action pursuant to 29 CFR 5.12.

(4) Apprentices and trainees--

(i) Apprentices. Apprentices will be permitted to work at less than the predetermined rate for the work they performed when they are employed pursuant to and individually registered in a bona fide apprenticeship program registered with the U.S. Department of Labor, Employment and Training Administration, Office of Apprenticeship Training, Employer and Labor Services, or

with a State Apprenticeship Agency recognized by the Office, or if a person is employed in his or her first 90 days of probationary employment as an apprentice in such an apprenticeship program, who is not individually registered in the program, but who has been certified by the Office of Apprenticeship Training, Employer and Labor Services or a State Apprenticeship Agency (where appropriate) to be eligible for probationary employment as an apprentice. The allowable ratio of apprentices to journeymen on the job site in any craft classification shall not be greater than the ratio permitted to the contractor as to the entire work force under the registered program. Any worker listed on a payroll at an apprentice wage rate, who is not registered or otherwise employed as stated above, shall be paid not less than the applicable wage rate on the wage determination for the classification of work actually performed. In addition, any apprentice performing work on the job site in excess of the ratio permitted under the registered program shall be paid not less than the applicable wage rate on the wage determination for the work actually performed. Where a contractor is performing construction on a project in a locality other than that in which its program is registered, the ratios and wage rates (expressed in percentages of the journeyman's hourly rate) specified in the contractor's or subcontractor's registered program shall be observed. Every apprentice must be paid at not less than the rate specified in the registered program for the apprentice's level of progress, expressed as a percentage of the journeymen hourly rate specified in the applicable wage determination. Apprentices shall be paid fringe benefits in accordance with the provisions of the apprenticeship program. If the

apprenticeship program does not specify fringe benefits, apprentices must be paid the full amount of fringe benefits listed on the wage determination for the applicable classification. If the Administrator determines that a different practice prevails for the applicable apprentice classification, fringes shall be paid in accordance with that determination. In the event the Office of Apprenticeship Training, Employer and Labor Services, or a State Apprenticeship Agency recognized by the Office, withdraws approval of an apprenticeship program, the contractor will no longer be permitted to utilize apprentices at less than the applicable predetermined rate for the work performed until an acceptable program is approved.

(ii) Trainees. Except as provided in 29 CFR 5.16, trainees will not be permitted to work at less than the predetermined rate for the work performed unless they are employed pursuant to and individually registered in a program which has received prior approval, evidenced by formal certification by the U.S. Department of Labor, Employment and Training Administration. The ratio of trainees to journeymen on the job site shall not be greater than permitted under the plan approved by the Employment and Training Administration. Every trainee must be paid at not less than the rate specified in the approved program for the trainee's level of progress, expressed as a percentage of the journeyman hourly rate specified in the applicable wage determination. Trainees shall be paid fringe benefits in accordance with the provisions of the trainee program. If the trainee program does not mention fringe benefits, trainees shall be paid the full amount of fringe benefits listed on the wage determination unless the Administrator of the Wage and Hour Division determines that there is an apprenticeship program associated with the corresponding journeyman wage rate on the wage determination which provides for less than full fringe benefits for apprentices. Any employee listed on the payroll at a trainee rate who is not registered and participating in a training plan approved by the Employment and Training Administration shall be paid not less than the applicable wage rate on the wage determination for the classification of work actually performed. In addition, any trainee performing work on the job site in excess of the ratio permitted under the registered program shall be paid not less than the applicable wage rate on the wage determination for the work actually performed. In the event the Employment and Training Administration withdraws approval of a training program, the contractor will no longer be permitted to utilize trainees at less than the applicable predetermined rate for the work performed until an acceptable program is approved.

(iii) Equal employment opportunity. The utilization of apprentices, trainees and journeymen under this part shall be in conformity with the equal employment opportunity requirements of Executive Order 11246, as amended, and 29 CFR part 30.

(5) Compliance with Copeland Act requirements. The contractor shall comply with the requirements of 29 CFR part 3, which are incorporated by reference in this contract.

(6) Subcontracts. The contractor or subcontractor shall insert in any subcontracts the clauses contained in 29 CFR 5.5(a)(1) through (10) and such other clauses as the EPA determines may by appropriate, and also a clause requiring the subcontractors to include these clauses in any lower tier subcontracts. The prime contractor shall be responsible for

the compliance by any subcontractor or lower tier subcontractor with all the contract clauses in 29 CFR 5.5.

(7) Contract termination; debarment. A breach of the contract clauses in 29 CFR 5.5 may be grounds for termination of the contract, and for debarment as a contractor and a subcontractor as provided in 29 CFR 5.12.

(8) Compliance with Davis-Bacon and Related Act requirements. All rulings and interpretations of the Davis-Bacon and Related Acts contained in 29 CFR parts 1, 3, and 5 are herein incorporated by reference in this contract.

(9) Disputes concerning labor standards. Disputes arising out of the labor standards provisions of this contract shall not be subject to the general disputes clause of this contract. Such disputes shall be resolved in accordance with the procedures of the Department of Labor set forth in 29 CFR parts 5, 6, and 7. Disputes within the meaning of this clause include disputes between the contractor (or any of its subcontractors) and Subrecipient(s), State, EPA, the U.S. Department of Labor, or the employees or their representatives.

(10) Certification of eligibility.

(i) By entering into this contract, the contractor certifies that neither it (nor he or she) nor any person or firm who has an interest in the contractor's firm is a person or firm ineligible to be awarded Government contracts by virtue of section 3(a) of the Davis-Bacon Act or 29 CFR 5.12(a)(1).

(ii) No part of this contract shall be subcontracted to any person or firm ineligible for award of a Government contract by virtue of section 3(a) of the Davis-Bacon Act or 29 CFR 5.12(a)(1).

(iii) The penalty for making false statements is prescribed in the U.S. Criminal Code, 18 U.S.C. 1001.

4. **Contract Provision for Contracts in Excess of $100,000.**

(a) Contract Work Hours and Safety Standards Act. The subrecipient shall insert the following clauses set forth in paragraphs (a)(1), (2), (3), and (4) of this section in full in any contract in an amount in excess of $100,000 and subject to the overtime provisions of the Contract Work Hours and Safety Standards Act. These clauses shall be inserted in addition to the clauses required by Item 3, above or 29 CFR 4.6. As used in this paragraph, the terms laborers and mechanics include watchmen and guards.

(1) Overtime requirements. No contractor or subcontractor contracting for any part of the contract work which may require or involve the employment of laborers or mechanics shall require or permit any such laborer or mechanic in any workweek in which he or she is employed on such work to work in excess of forty hours in such workweek unless such

laborer or mechanic receives compensation at a rate not less than one and one-half times the basic rate of pay for all hours worked in excess of forty hours in such workweek.

(2) Violation; liability for unpaid wages; liquidated damages. In the event of any violation of the clause set forth in paragraph (a)(1) of this section the contractor and any subcontractor responsible therefore shall be liable for the unpaid wages. In addition, such contractor and subcontractor shall be liable to the United States (in the case of work done under contract for the District of Columbia or a territory, to such District or to such territory), for liquidated damages. Such liquidated damages shall be computed with respect to each individual laborer or mechanic, including watchmen and guards, employed in violation of the clause set forth in paragraph (a)(1) of this section, in the sum of $10 for each calendar day on which such individual was required or permitted to work in excess of the standard workweek of forty hours without payment of the overtime wages required by the clause set forth in paragraph (a)(1) of this section.

(3) Withholding for unpaid wages and liquidated damages. The subrecipient**,** upon written request of the EPA Award Official or an authorized representative of the Department of Labor, shall withhold or cause to be withheld, from any moneys payable on account of work performed by the contractor or subcontractor under any such contract or any other Federal contract with the same prime contractor, or any other federally-assisted contract subject to the Contract Work Hours and Safety Standards Act, which is held by the same prime contractor, such sums as may be determined to be necessary to satisfy any liabilities of such contractor or subcontractor for unpaid wages and liquidated damages as provided in the clause set forth in paragraph (b)(2) of this section.

(4) Subcontracts. The contractor or subcontractor shall insert in any subcontracts the clauses set forth in paragraph (a)(1) through (4) of this section and also a clause requiring the subcontractors to include these clauses in any lower tier subcontracts. The prime contractor shall be responsible for compliance by any subcontractor or lower tier subcontractor with the clauses set forth in paragraphs (a)(1) through (4) of this section.

(b) In addition to the clauses contained in Item 3, above, in any contract subject only to the Contract Work Hours and Safety Standards Act and not to any of the other statutes cited in 29 CFR 5.1, the Subrecipient shall insert a clause requiring that the contractor or subcontractor shall maintain payrolls and basic payroll records during the course of the work and shall preserve them for a period of three years from the completion of the contract for all laborers and mechanics, including guards and watchmen, working on the contract. Such records shall contain the name and address of each such employee, social security number, correct classifications, hourly rates of wages paid, daily and weekly number of hours worked, deductions made, and actual wages paid. Further, the Subrecipient shall insert in any such contract a clause providing hat the records to be maintained under this paragraph shall be made available by the contractor or subcontractor for inspection, copying, or transcription by authorized representatives of the (write the name of agency) and the Department of Labor, and the contractor or subcontractor will permit such representatives to interview employees during working hours on the job.

STATE REVOLVING FUND LOAN PROGRAM

Loan Recipient's and Contractor's Guidance

FY2010 and After

Tracking and Reporting

For tracking and reporting purposes, the **Loan Recipient** is responsible for the following:

- Ensuring that the Contractor is in compliance with the Davis Bacon provisions of ARRA
- The loan recipients **must keep a file** in which all documentation **must be stored** for the current classifications and wage rates (under the Davis-Bacon Act) for the construction of their projects. This file must be kept for three (3) years after the project is completed and **will** be subject to audit by the State of Tennessee and the Environmental Protection Agency (EPA).
- Any additional tracking and reporting requirements from EPA

For tracking and reporting purposes, the **Contractor** is responsible for the following:

- Achieving and maintaining compliance with the Davis Bacon provisions of ARRA
- Submitting with each **pay estimate** a certification stating that workers have been paid the current prevailing wage rates for each classification according to the Davis-Bacon wage rate schedule currently in effect for this project
- Any additional tracking and reporting requirements from EPA

Please contact Dr. Bagher Sami, Administrative Section Manager for the SRF Loan Program, at 615-532-0501 or bagher.sami@tn.gov to obtain details.

NOTICE

THIS ENTITY IS A RECIPIENT OF STATE AND FEDERAL FUNDS. IF YOU HAVE KNOWLEDGE OF ANY ACTIVITY WHICH YOU CONSIDER TO BE ILLEGAL, IMPROPER, OR WASTEFUL, PLEASE CALL THE STATE COMPTROLLER'S TOLL-FREE HOTLINE:

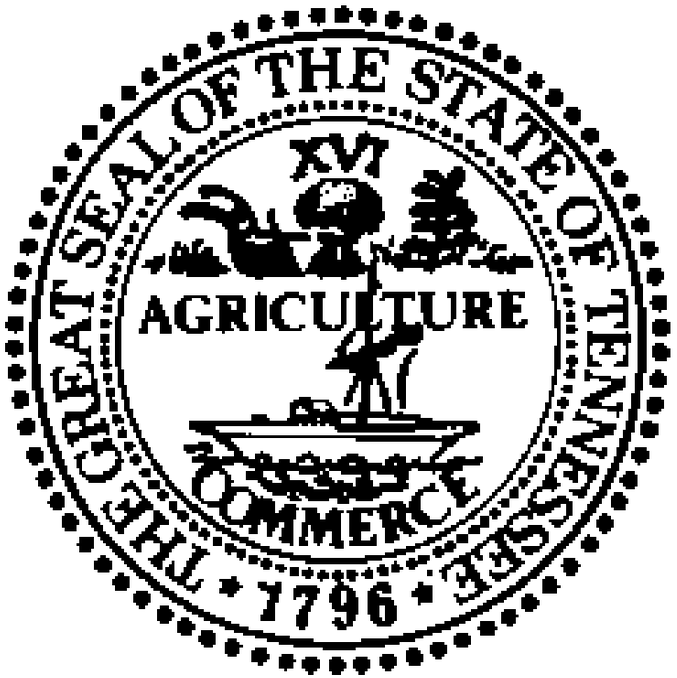

1-800-232-5454

TENNESSEE DEPARTMENT OF ENVIRONMENT AND CONSERVATION
Division of Water Resources
William R. Snodgrass Tennessee Tower, 312 Rosa L. Parks Avenue, 11th Floor, Nashville, Tennessee 37243
1-888-891-8332 (TDEC)

Notice of Intent (NOI) for General NPDES Permit for Stormwater Discharges from Construction Activities (TNR100000)

Site or Project Name:		**Existing NPDES Tracking Number: TNR**
Street Address or Location:		Start date:
		Estimated end date:
Site Activity Description:		Latitude (dd.dddd):
		Longitude (dd.dddd):
County(ies):	MS4 Jurisdiction:	Acres Disturbed:
		Total Acres:

Does a topographic map show dotted or solid blue lines ☐ and/or wetlands ☐ on or adjacent to the construction site?
If wetlands are located on-site and may be impacted, attach wetlands delineation report.
If an Aquatic Resource Alteration Permit has been obtained for this site, what is the permit number? ARAP permit No.:

Receiving waters:

Attach the SWPPP with the NOI	☐ SWPPP Attached	Attach a site location map	☐ Map Attached

Site Owner/Developer Entity (*Primary Permittee*)**:** (person, company, or legal entity that has operational or design control over construction plans and specifications):

Site Owner/Developer Signatory (V.P. level/higher - signs certification below): (individual responsible for site):		Signatory's Title or Position (V.P. level/higher - signs certification below):	
Mailing Address:		City:	State: / Zip:
Phone: ( )	Fax: ( )	E-mail:	

Optional Contact:		Title or Position:	
Mailing Address:		City:	State: / Zip:
Phone: ( )	Fax: ( )	E-mail:	

Owner or Developer Certification (must be signed by president, vice-president or equivalent, or ranking elected official) (Primary Permittee)

I certify under penalty of law that this document and all attachments were prepared by me, or under my direction or supervision. The submitted information is to the best of my knowledge and belief, true, accurate, and complete. I am aware that there are significant penalties for submitting false information, including the possibility of fine and imprisonment. As specified in Tennessee Code Annotated Section 39-16-702(a)(4), this declaration is made under penalty of perjury.

Owner or Developer Name; (print or type)	Signature:	Date:

Contractor(s) Certification (must be signed by president, vice-president or equivalent, or ranking elected official) (Secondary Permittee)

I certify under penalty of law that I have reviewed this document, any attachments, and the SWPPP referenced above. Based on my inquiry of the construction site owner/developer identified above and/or my inquiry of the person directly responsible for assembling this NOI and SWPPP, I believe the information submitted is accurate. I am aware that this NOI, if approved, makes the above-described construction activity subject to NPDES permit number TNR100000, and that certain of my activities on-site are thereby regulated.

Contractor company name (print or type):			
Contractor signatory (print/type): (V.P. level or higher)		Signature:	Date:
Mailing Address:		City: / State:	Zip:
Phone: ( )	Fax: ( )	E-mail:	

Other Contractor company name (print or type):			
Other Contractor signatory (print/type): (V.P. level or higher)		Signature:	Date:
Mailing Address:		City: / State:	Zip:
Phone: ( )	Fax: ( )	E-mail:	

OFFICIAL STATE USE ONLY

Received Date:	Reviewer:	Field Office:	Permit Number **TNR**	Exceptional TN Water:
Fee(s):	T & E Aquatic Flora and Fauna:		Impaired Receiving Stream:	Notice of Coverage Date:

(Continued on reverse)

Notice of Intent (NOI) for General NPDES Permit for Stormwater Discharges from Construction Activities (TNR100000)

Purpose of this form A completed notice of intent (NOI) must be submitted to obtain coverage under the Tennessee General NPDES Permit for Discharges of Stormwater Associated with Construction Activity (permit). **Requesting coverage under this permit means that an applicant has obtained and examined a copy of this permit, and thereby acknowledges applicant's claim of ability to be in compliance with permit terms and conditions.** This permit is required for stormwater discharge(s) from construction activities including clearing, grading, filling and excavating (including borrow pits) of one or more acres of land. This form should be submitted at least 30 days prior to the commencement of land disturbing activities, or no later than 48 hours prior to when a new operator assumes operational control over site specifications or commences work at the site.

Permit fee (see table below) must accompany the NOI and is based on total acreage to be disturbed by an entire project, including any associated construction support activities (e.g. equipment staging yards, material storage areas, excavated material disposal areas, borrow or waste sites). There is no fee for sites less than 1 acre.

Acres Disturbed	= or > 150 acres	= or > 50 < 150 acres	= or > 5 < 50 acres	= or > 1 < 5 acres
Fee	$7,500	$4,000	$1,000	$250

Who must submit the NOI form? Per Section 2 of the permit, all site operators must submit an NOI form. "Operator" for the purpose of this permit and in the context of stormwater associated with construction activity means any person associated with a construction project who meets either or both of the following two criteria: (1) The person has operational or design control over construction plans and specifications, including the ability to make modifications to those plans and specifications. This person is typically the owner or developer of the project or a portion of the project (e.g. subsequent builder), or the person that is the current land owner of the construction site. This person is considered the primary permittee; or (2) The person has day-to-day operational control of those activities at a project which are necessary to ensure compliance with a SWPPP for the site or other permit conditions. This person is typically a contractor or a commercial builder who is hired by the primary permittee, and is considered a secondary permittee.

Owners, developers and all contractors that meet the definition of the operator in subsection 2.2 of the permit shall apply for permit coverage on the same NOI, insofar as possible. After permit coverage has been granted to the primary permittee, any subsequent NOI submittals must include the site's previously assigned permit tracking number and the project name. The comprehensive site-specific SWPPP shall be prepared in accordance with the requirements of part 3 of the permit and must be submitted with the NOI unless the NOI being submitted is to only add a contractor (secondary permittee) to an existing coverage.

Notice of Coverage The division will review the NOI for completeness and accuracy and prepare a notice of coverage (NOC). Stormwater discharge from the construction site is authorized as of the effective date of the NOC.

Complete the form Type or print clearly, using ink and not markers or pencil. Answer each item or enter "NA," for not applicable, if a particular item does not fit the circumstances or characteristics of your construction site or activity. If you need additional space, attach a separate piece of paper to the NOI form. **The NOI will be considered incomplete without a permit fee, a map, and the SWPPP.**

Describe and locate the project Use the legal or official name of the construction site. If a construction site lacks street name or route number, give the most accurate geographic information available to describe the location (reference to adjacent highways, roads and structures; e.g. intersection of state highways 70 and 100). Latitude and longitude (expressed in decimal degrees) of the center of the site can be located on USGS quadrangle maps. The quadrangle maps can be obtained at the USGS World Wide Web site: http://www.usgs.gov/; latitude and longitude information can be found at numerous other web sites. Attach a copy of a portion of a 7.5 minute quad map, showing location of site, with boundaries at least one mile outside the site boundaries. Provide estimated starting date of clearing activities and completion date of the project, and an estimate of the number of acres of the site on which soil will be disturbed, including borrow areas, fill areas, stockpiles and the total acres. For linear projects, give location at each end of the construction area.

MS4 Jurisdiction: If this construction site is located within a Municipal Separate Storm Sewer System (MS4), please list name of MS4. A current list of MS4s in Tennessee may be found at http://www.tn.gov/environment/wpc/stormh2o/docs/MS4s_Jan2012.pdf

Give name of the receiving waters Trace the route of stormwater runoff from the construction site and determine the name of the river(s), stream(s), creek(s), wetland(s), lake(s) or any other water course(s) into which the stormwater runoff drains. Note that the receiving water course may or may not be located on the construction site. If the first water body receiving construction site runoff is unnamed ("unnamed tributary"), determine the name of the water body that the unnamed tributary enters.

ARAP permit may be required **If your work will disturb or cause alterations of a stream or wetland, you must obtain an appropriate Aquatic Resource Alteration Permit (ARAP).** If you have a question about the ARAP program or permits, contact your local Environmental Field Office (EFO).

Submitting the form and obtaining more information Note that this form must be signed by the company President, Vice-President, or a ranking elected official in the case of a municipality, for details see subpart 2.5. For more information, contact your local EFO at the toll-free number 1-888-891-8332 (TDEC). Submit the completed NOI form (keep a copy for your records) to the appropriate EFO for the county(ies) where the construction activity is located, addressed to **Attention: Stormwater NOI Processing**.

EFO	**Street Address**	**Zip Code**	**EFO**	**Street Address**	**Zip Code**
Memphis	8383 Wolf Lake Drive, Bartlett	38133-4119	Cookeville	1221 South Willow Ave.	38506
Jackson	1625 Hollywood Drive	38305-4316	Chattanooga	540 McCallie Avenue STE 550	37402-2013
Nashville	711 R S Gass Boulevard	37243	Knoxville	3711 Middlebrook Pike	37921
Columbia	1421 Hampshire Pike	38401	Johnson City	2305 Silverdale Road	37601

TENNESSEE DEPARTMENT OF ENVIRONMENT AND CONSERVATION (TDEC)
Division of Water Resources
William R. Snodgrass Tennessee Tower, 312 Rosa L. Parks Avenue, 11th Floor, Nashville, Tennessee 37243
1-888-891-TDEC (8332)

Notice of Termination (NOT) for General NPDES Permit for Stormwater Discharges from Construction Activities (CGP)

This form is required to be submitted when requesting termination of coverage from the CGP. The purpose of this form is to notify the TDEC that either all stormwater discharges associated with construction activity from the portion of the identified facility where you, as an operator, have ceased or have been eliminated; or you are no longer an operator at the construction site. Submission of this form shall in no way relieve the permittee of permit obligations required prior to submission of this form. Please submit this form to the local WPC Environmental Field Office (EFO) address (see table below). For more information, contact your local EFO at the toll-free number 1-888-891-8332 (TDEC).

Type or print clearly, using ink.

Site or Project Name:	**NPDES Tracking Number: TNR**
Street Address or Location:	County(ies):

Name of Permittee Requesting Termination of Coverage:			
Permittee Contact Name:	Title or Position:		
Mailing Address:	City:	State:	Zip:
Phone: ( )	E-mail:		

Check the reason(s) for termination of permit coverage:

☐	Stormwater discharge associated with construction activity is no longer occurring and the permitted area has a uniform 70% permanent vegetative cover OR has equivalent measures such as rip rap or geotextiles, in areas not covered with impervious surfaces.
☐	You are no longer the operator at the construction site (i.e., termination of site-wide, primary or secondary permittee coverage).

Certification and Signature: (must be signed by president, vice-president or equivalent ranking elected official)

I certify under penalty of law that either: (a) all stormwater discharges associated with construction activity from the portion of the identified facility where I was an operator have ceased or have been eliminated or (b) I am no longer an operator at the construction site. I understand that by submitting this notice of termination, I am no longer authorized to discharge stormwater associated with construction activity under this general permit, and that discharging pollutants in stormwater associated with construction activity to waters of the United States is unlawful under the Clean Water Act where the discharge is not authorized by a NPDES permit. I also understand that the submittal of this notice of termination does not release an operator from liability for any violations of this permit or the Clean Water Act.

For the purposes of this certification, elimination of stormwater discharges associated with construction activity means that all stormwater discharges associated with construction activities from the identified site that are authorized by a NPDES general permit have been eliminated from the portion of the construction site where the operator had control. Specifically, this means that all disturbed soils at the portion of the construction site where the operator had control have been finally stabilized, the temporary erosion and sediment control measures have been removed, and/or subsequent operators have obtained permit coverage for the site or portions of the site where the operator had control.

I certify under penalty of law that this document and all attachments were prepared by me, or under my direction or supervision. The submitted information is to the best of my knowledge and belief, true, accurate, and complete. I am aware that there are significant penalties for submitting false information, including the possibility of fine and imprisonment. As specified in Tennessee Code Annotated Section 39-16-702(a)(4), this declaration is made under penalty of perjury.

Permittee name (print or type):	Signature:	Date:

EFO	Street Address	Zip Code	EFO	Street Address	Zip Code
Memphis	8383 Wolf Lake Drive, Bartlett, TN	38133	Cookeville	1221 South Willow Ave.	38506
Jackson	1625 Hollywood Drive	38305	Chattanooga	540 McCallie Avenue STE 550	37402
Nashville	711 R S Gass Boulevard	37243	Knoxville	3711 Middlebrook Pike	37921
Columbia	1421 Hampshire Pike	38401	Johnson City	2305 Silverdale Road	37601

CLEAN WATER STATE REVOLVING FUND

IDENTIFICATION SIGN

All plans and specifications for each project approved shall contain provisions for requiring the general contractor to provide identification signs. The signs shall conform to the following basic features:

1. The following diagram shall be used as a design:

CLEAN WATER FOR TENNESSEE

DEPARTMENT OF ENVIRONMENT AND CONSERVATION

GOVERNOR
BILL HASLAM

COMMISSIONER
BOB MARTINEAU

CITY OF

MAYOR

STATE REVOLVING FUND PROJECT

CWSRF LOAN . . . $ _____

2. The sign shall be a 4'0" X 8'0" sheet of exterior grade plywood and shall be built so as to remain erected during the entire construction phase of the project.

3. The background of both sides shall be white. The lettering shall be black and shall be large enough to take advantage of the full size of the plywood. The stars shall be white set on a blue field and surrounded by a white ring placed inside a state map in red with a stripe of white and blue on the right side. The sign shall be bordered by a one-inch blue stripe.

Revised: JANUARY 20, 2011

STATE REVOLVING FUND LOAN PROGRAM

BID PACKAGE SUBMITTAL REQUIREMENTS

PRIOR TO FINAL CONTRACT AWARD by the State Revolving Fund (SRF) Loan Program, the Loan Recipient must prepare and submit a completed Bid Package to the SRF Loan Program for review and **written approval**. An **Authority-to-Award (ATA)** letter from the SRF Loan Program must be obtained prior to the final contract award and the initiation of construction activities.

A completed Bid Package submittal consists of the following:

1. A copy of the **Advertisement for Bids** appearing in a local or major regional newspaper or the Dodge Report (40 CFR 31.36 (d)(2)(ii)(A)). *The project must be advertised for a minimum of 14 days prior to the bid opening.*
2. An original copy of either the **Award Resolution or the minutes** from the meeting of the governing body (or a certified copy of either) that tentatively awards the contract(s) to the lowest, responsible, responsive bidder(s)
3. A **certified bid tabulation** stamped and signed by the consulting engineer reviewing the bids
4. A copy of the **signed Bid Proposal** of the apparent successful bidder
5. **Equal Employment Opportunity (EEO) documentation** signed by the apparent successful bidder
6. **Bid Bond with Power of Attorney** (40 CFR 31.36(h))
7. Signed and dated U.S. EPA (or other agency) **Contractor Debarment Form**, such as the U.S. Environmental Protection Agency Certification Regarding Debarment, Suspension and Other Responsibility Matters
8. An original, notarized certification of publication (**Publisher's Affidavit**) signed by the editor of the newspaper
9. Copies of a minimum of 10 **certified letters** and "**Return Receipt Requested"** forms sent to potential **Disadvantaged Business Enterprises (DBE)** subcontractors, supplies vendors, service providers, and/or equipment vendors
10. A copy of the current **Davis-Bacon** wage rates used on this project (Davis-Bacon Act)
11. A completed **Loan Recipient's Certification and Summary** of **DBE** Participation on SRF Projects **(**40 CFR 31.36 (e)(2)(i through vi))
12. If **DBE** participation was obtained,
    - **Prime Contractor's Notice Letter** for EPA Form 6100-2
    - **EPA Form 6100-3** completed by Prime Contractor and **DBE Subcontractor(s)**
    - **EPA Form 6100-4** completed by the Prime Contractor
13. If no **DBE** participation was obtained, a "**Good Faith Effort**" letter (See Good Faith Effort Steps at 40 CFR 31.36 (e)(2)(i through vi))
14. Reference documents:
    - **Loan Recipient's Requirements** for Solicitation and Documentation of **DBE** Participation on SRF Projects
    - **Bidder's Requirements** for Solicitation and Documentation of **DBE** Participation on SRF Projects
    - **Loan Recipient's Certification and Summary** of **DBE** Participation on SRF Loan-Funded Projects
    - **Guidance Document** for **DBE** Requirements for SRF loans
15. If applicable, documentation of the justification for not awarding the contract to the lowest bidder if the award is to be made to a bidder other than the low bidder. The justification must indicate why the low bidder is not responsive or responsible and include documentation of any negotiations leading to the determination.
16. Resume of the resident inspector(s)
17. Documentation of the extension of the bid proposal and bid bond expiration dates, if necessary

If the lowest bid received exceeds the amount budgeted for construction in the SRF-approved SRF Loan Budget, the loan recipient must choose only from the following options:

- **Re-allocate** SRF funds through a budget revision. A revised Budget/Re-budget Form must be submitted to the SRF for review and approval if the re-budgeting option is chosen.
- **Provide** additional funds needed to pay the contract from **local funds** or funding source(s) other than the SRF loan
- **Apply** for an **SRF loan increase**. Application for a loan increase will require re-evaluation of the loan recipient's user rates to determine if the anticipated revenues will be sufficient to repay the requested loan increase and fund the additional depreciation. **Principal forgiveness does not apply to loan increases.**
- **Reject** all bids and **re-bid the project**

Please contact Dr. Bagher Sami by telephone at (615) 532-0501 or by e-mail at bagher.sami@tn.gov if you have any questions concerning the contents of the Bid Package submittal for State Revolving Fund projects.

City Letter Head

Dr. Bagher Sami,
Administrative and Financial Section Manager
State Revolving Fund Loan Program
William R. Snodgrass - Tennessee Tower
312 Rosa L. Parks Avenue, 12th Floor
Nashville, Tennessee 37243-1102

RE: Property, Easements, Rights-of-Way Certification
City/County/UD/Authority (xxxx County or xxx and xxxx Counties), Tennessee
Loan No. SRF CWA CGA DWF DWA DGA 200x-xxx
Loan Description: xxxxxxxxx
Contract No. / Name 1 of 2—Contract Description
Contract No. / Name 2 of 2—Contract Description

Dear Dr. Sami:

This letter is to certify that all property, easements, and rights-of-way necessary to construct the projects included in the above-referenced contract are owned (or in the case of right-of-way permitted for the use) by the City/County/UD/Authority. And/or The plant improvements are to be constructed on the same site as our existing facility. Based upon this, no "Site Certificate" is required.

Sincerely,

Authorized Representative, Title

SITE CERTIFICATION

I certify that the applicant, the City of ???, ??? County, the ??? Utility District, the ??? Water/Wastewater/Energy Authority has acquired or has entered into condemnation proceedings for all real property including easements and rights-of-way that are or will be required for the construction (erection, extension, modification, addition), operation, and maintenance of the entire wastewater treatment works funded under loan number SRF/CWA/CGA/DWF/DWA/DGA 200?-???.

I certify that any deeds or documents required to be recorded in order to protect the title of the owner and the interest of the City of ???, ??? County, the ??? Utility District, the ??? Water/Wastewater/Energy Authority have been duly recorded and filed for record wherever necessary.

I further certify that real property including easements required for the entire wastewater treatment works project was acquired in accordance with the requirements of the Uniform Relocation Assistance and Real Property Acquisition Policies Act of 1970 and EPA's regulation 40 CFR Part 4.

Dated this _____day of _____, 20___.

_____
Applicants' Authorized Representative

_____
Title (Mayor, City Manager, Commissioner, etc.)

_____
Attorney (Typed and Signed)

00672.7 Bid Bond

Know all men by these presents, that we, the undersigned,
_____ as

Principal, and_____as surety,

Hereby held and firmly bound unto _____ as Owner on the sum of _____ for the payment of which, well and truly to be made, We hereby jointly and severally bind ourselves, our heirs, executors, administrators, successors and assigns.

Signed this _____ day of _____, 2013.

This condition of the above obligation is such that whereas the principal has submitted to the Purchaser a certain bid, attached hereto and hereby made a part of hereof to enter into a contract in writing for the construction of:

SARP 10 Program 179821.71.0411 Mainline Sewer Point Repair

Now therefore,

A) If said bid shall be rejected, or in the alternative,

B) If said bid shall be accepted and the principal shall execute and deliver a contract in the form of contract attached hereto (properly completed in accordance with said bid), required insurance certificates, and shall furnish a Bond for the payment of all persons performing labor or furnishing materials in connection therewith, and shall in all other respects perform the agreement created by the acceptance of said Bond,

Then this obligation shall be void, otherwise the same shall remain in force and effect; it being expressly understood and agreed that the liability of the surety for any and all claims hereunder shall, in no event, exceed the amount of this obligation as herein stated.

The surety, for value received, hereby stipulates and agrees that the obligations of said surety and its bond shall be in no way impaired or affected by any extension of the time within which the Purchaser may accept such bid; and said surety does hereby waive notice of any such extension.

In witness whereof, the principal and the surety hereunto set their hands and seals, and such of them as are corporations have caused their corporate seals to be hereto affixed and these presents to be signed by their proper officers, the day and year set forth above.

CONTRACTOR		**SURETY**
_____	Surety:____	_____
Contractor's Company Name		Name
_____	By:	_____
Signature (principal)		Attorney in Fact - Signature
_____		_____
Printed or Typed Name and Title		Printed or Typed Name

00770 – Loss Control Manual

The Loss Control Manual is available for viewing at the SARP10 Program Office:

Contact Gary Older, Construction Manager to schedule an appointment:

OlderGS@bv.com or 813-323-0502

Technical Specifications

Section 00003 – Closed Circuit Television Inspection of Sewer Mains & Connections modified by SARP10 Program

Section 02540 – Sanitary Sewer Point Repairs modified by SARP10 Program

Section 02950 – Removal and Replacement of Pavements and Incidentals modified by SARP10 Program

Sanitary Sewer Point Repair

Pavement Repair Single Lane

Pavement Repair Multi-Lane

Pavement Repair Patch in Patch

Pavement Repair Cross Slope

Pavement Repair Traverse Patch

CITY OF MEMPHIS – STANDARD CONSTRUCTION SPECIFICATIONS modified by SARP10 Program
SECTION 00003 - CLOSED CIRCUIT TELEVISION INSPECTION OF SEWER MAINS & CONNECTIONS

PART 1 – SCOPE

1.01 This Work will consist of cleaning and Pipeline Assessment Certification Program (PACP) internal closed circuit television (CCTV) surveys to digitally inspect and record conditions of existing sanitary sewer mains and connections. Sewer pipes and connections to be inspected are located in both improved streets, arterial and primary roads, backyards and unimproved easements.

1.02 The Work covered by this section includes furnishing all labor, competent PACP certified technicians, equipment, tools, accessories, and materials required to clean and inspect the designated sanitary sewer lines.

1.03 PACP compliant inspections, logs, data, and photos shall be delivered to the Program Manager on external hard drive(s) which will become property of the Program Manager. Data files shall be formatted to facilitate upload into a PACP compliant Exchange database or internet uploads formats to an FTP site approved by the Program Manager.

PART 2 – MATERIALS & EQUIPMENT

2.01 MATERIALS

A. Submittals

1. Unless otherwise specified all sample submittals shall be delivered to the Program Manager within two weeks of the NTP.
2. Traffic Control Plan to the Program Manager, which includes the following items:
   a. Outline of permit acquisition procedure for lane closures.
   b. Methods for proper signing and barricades, which comply with local requirements and the City.
   c. Major streets (e.g. Shelby County Principal Arterial & Minor Arterial) requiring a City approved permit if taking a lane for mobile operations, secured through Traffic Control Plan submittal to the City and signed by a TN PE. The City requires two-week lead time for permit processing.
      i. The Subcontractor will be required to deliver a sample primary/arterial road Traffic Control Plan for review by the City.
      ii. If the City determines that the nature of the work operation or the type of road in which the Subcontractor is working requires a permit, the Subcontractor will be required to modify the sample Traffic Control Plan to obtain a permit from the City.

d. For everywhere else where a permit is not required, the Subcontractor shall develop, provide, and implement a traffic control plan for all mobile operations in accordance with standard MUTCD specifications.
e. The Subcontractor is also responsible for acquiring all necessary disposal and/or landfill site permits as required to perform this work.
f. Railroad Rights of Way: The Subcontractor shall notify the Program Manager when work or access to manholes and sanitary sewers lie within the 25 feet railroad easement as measured by 25 feet outside the nearest rail of the tracks. To access sewer facilities within the 25 feet of the railroad right of way the Subcontractor shall contact the Program Manager 48 hours in advance who will alert the City's Zone Construction Inspector to coordinate individual railroad direction and guidance.

3. Site Subcontractor emergency phone numbers.
4. Schedules of work on a weekly basis that will be delivered no later than 2:00 PM on Thursday for the week following with daily AM email updates of approximate crew locations each day.
   a. Weekly schedule format shall contain the following elements:
      i. Map format.
      ii. Sufficient streets labeled and identified at a scale to provide clarity.
      iii. Nature and type of crew location by map area.
5. Confined space entry plans for both "permit required" and "non-permit required" confined spaces.
6. Copies of National Association of Sewer Service Companies (NASSCO) certification for all field staff conducting PACP inspections.
7. Sample of PACP compliant television survey log in MS Access format.
8. Sample of PACP compliant video inspection in MP-4 format.
9. Cleaning and CCTV vehicle, equipment, and cleaning supplies list.
10. Disposal site(s) and appropriate landfill permits for appropriate disposal of all waste materials removed from the sewer during the light and heavy cleaning operations.

2.02 EQUIPMENT

A. General

1. All equipment used for PACP compliant CCTV sewer segment inspections of existing sanitary sewer mains and connections shall be specifically designed and manufactured for the purpose intended under this Subcontract. The software and hardware for the electronic

capture of the inspection defects and recorded observations must be Version 6.0.1 NASSCO PACP compliant.

2. The Subcontractor shall submit an equipment list to the Program Manager for approval before the commencement of the Work and shall certify that back-up equipment is available and can be delivered to the worksite within 72 hours.
3. The Subcontractor shall provide equipment to perform inspections of sewer mains located in streets, street rights-of-way, backyards, easements and rights-of way that are off-road.
   a. Including but not limited to portable CCTV equipment, vehicles capable of transporting TV equipment and accessing remote easements, and adequate cleaning equipment rights of way or easement applications.

B. PACP Compliant Software & Data logger Requirements

1. Data logger
   a. Internal inspection logs created and captured electronically during the television inspection through the use of commercially available electronic data loggers in the truck are required. NASSCO PACP protocols Version 6.0.1 shall be used for capturing and recording the observations. Audio commentary made during the inspection and captured on the digital video shall correspond with the PACP observations on the log.
   b. The data logger equipment and software shall allow the Program Manager access directly to the captured electronic data and provide for a non-proprietary export of the data into MS ACCESS databases in accordance with PACP standards for standalone database review. The equipment will also be compatible with CityWorks software by Azteca and other similar computerized maintenance management databases.
2. Software must be compliant with the NASSCO PACP V.6.0.1 standards. Follow PACP protocol for recording of observations and defects for sewer mains.
   a. All software shall be capable of providing complete survey reports in compliance with PACP, and the software shall be the V.6.0.1 of the PACP compliant software.
   b. The Program Manager has no intent to specify which software the Subcontractor shall use, but requires the software and the submitted database to be fully compliant with PACP V.6.0.1 and capable of being exported to ACCESS databases. No payment will be rendered for improperly formatted data.
   c. Software and data logger must be capable of capturing sewer main and sewer lateral observations by PACP descriptions, record

travel footage along pipeline, and video time stamp the recorded observations to support hyper linking from the digital record to the event point or location within the digital inspection record. The same requirements apply to still photo images (if provided) which shall follow PACP guidelines and be hyperlinked to the inspection log.

C. Sewer Main CCTV

1. Sewer Main Digital Color Video Camera
   a. All cameras used shall be digital format color CCTV units specifically designed and constructed for use in sewer pipe inspection work. The cameras shall be operable in 100 percent humidity conditions. The camera shall have a high-resolution, 360-degree pan and tilt or rotating head with a wide viewing angle lens and either automatic or remote focus and iris controls. Camera lighting shall be sufficient for use with digital color inspection cameras and for the manhole and pipe diameters identified in the contract.
      i. Camera, Television Monitor, and Other Components shall be capable of producing a high resolution color digital inspection record.
      ii. Video file to be in MP-4 digital format
   b. In all cases, the complete digital inspection system (camera, lens, lighting, cables, monitors, and recorders) shall be capable of providing a digital picture and digital video quality acceptable to the Program Manager. Inadequate lighting, image distortions, blurry or murky images, and dirty lenses will be a cause for rejection. No payment will be made for unsatisfactory inspections and the Subcontractor shall perform work until deliverable is of acceptable quality. Digital video cameras/digital recorders not specifically intended for use for internal television inspection of manholes and sewer lines shall not be permitted.
   c. Pan and tilt type camera, capable of turning at right angles to pipe’s axis over an entire pipe wall perimeter shall be used.
      i. The camera lens shall be capable of self-righting itself after a lateral view or connection view with a return view down the pipe with a “home" capability for the lens.
   d. Lighting shall be suitable to allow clear picture of entire inner pipe wall extending at least 10 feet in front, including black High Density Polyethylene (HDPE) pipe.
   e. Document header and observations shall be in accordance with PACP V.6.0.1 protocols.

D. Cleaning Equipment

1. Hydraulic sewer pipe cleaners or combination hydraulic/vacuum cleaners shall be specifically designed and constructed for such cleaning.
2. Mechanical sewer pipe cleaners shall be specifically designed and constructed for such cleaning.
3. The Subcontractor shall possess equipment capable of cleaning hydraulically or mechanically a minimum of 1,000 linear feet of pipe from one direction and have a minimum 1,000 linear feet of hose or cable on-site during the cleaning execution.
4. Hydraulic sewer pipe cleaners shall be specifically designed and constructed for such cleaning. The sewer cleaner shall have a minimum usable water capacity of 600 gallons and a pump capable of delivering at least 30 gallons per minute at 1,500 psi at the nozzle.
   a. The hydraulic cleaning equipment shall have multiple hydraulic cleaner hose nozzles for a variety of sewer cleaning conditions, including grease, roots, debris and granular materials.
   b. Vacuum equipment shall be capable of lifting debris removed from the segment from the downstream manhole.
5. Mechanical sewer pipe cleaners (cable machines with buckets, brushes, swabs, root cutters, and power rodders with similar capability) shall be capable of controlled forward and reverse travel through the sewers without inflicting damage to the existing pipe in removing rocks, grit and other heavy debris and roots.

PART 3 – CONSTRUCTION REQUIREMENTS

3.01 CCTV Inspection of Sewer Mains

A. Cleaning

1. Light Cleaning
   a. Before CCTV work, the Subcontractor shall light clean the sewer line from manhole to manhole, from upstream to downstream direction unless an obstruction is encountered, one sewer section at a time and performed as efficiently as possible at the Subcontractor's discretion.
   b. Materials shall not be passed from one sewer segment to another but must be trapped and removed from each sewer segment prior to CCTV inspection.
2. Heavy Cleaning
   a. If a camera is inserted and additional debris or impediments to inspection are observed following the required light cleaning,

heavy cleaning shall be approved by the Program Manager. Sections of pipe containing significant roots, large areas of debris, and/or several inches of depth of sands and gravels that will require the use of additional hydraulic nozzles, cable/bucket machine, power rodders and root cutters is considered heavy cleaning.

b. Heavy cleaning will be proposed by the Subcontractor and approved by the Program Manager. The Subcontractor must obtain prior approval for heavy cleaning in each sewer segment in order to receive payment for heavy cleaning.

3. Cleaning Execution
   a. No roots, grease or debris from light or heavy cleaning shall be passed from sewer segment to sewer segment during the cleaning operation. All debris flushed from the sewer must be collected, captured, and removed from the sewer at the downstream manhole.
   b. Roots shall be removed in the sections where root intrusion is a problem. Special precautions shall be exercised during the cleaning operation to assure complete removal of visible roots from the joint area and so as not to incur further damage to the pipe. Any visible roots that may impact rehabilitation efforts shall be removed. Fine roots are allowed if the Subcontractor made a heavy cleaning attempt to remove roots with proper root removal means. Procedures may include the use of mechanical devices such as rodding machines, expanding root cutters and porcupines, and hydraulic procedures such as high-pressure jet cleaners.
   c. The Subcontractor is responsible for safe, responsible and legal handling and disposal of all material and debris removed from the sewers. The Subcontractor is responsible for all permits and landfill fees associated with the disposal of debris collected and removed from the sewer.
   d. The Subcontractor shall provide a dated manifest of the volume or weight of the dewatered sewer cleaning loads taken and dumped at the permitted dump site selected by the Subcontractor. Each waste load manifest shall be associated with a list of corresponding sewer segments from where the waste originated.

B. <u>Sewer Flow Levels During Inspection Operations</u>

1. Maintain low sewer flow during inspection by using sandbags or flow-through plugs or by inspecting during low flow times of day, evening, or early morning hours while camera is moving and recording observations in the sewer segment. Any items used to restrict flow shall be removed immediately after intended use.

a. Flow-through Plugs: If used, secure the plugs so as to remain in place during inspection. Use a fail-safe device at the downstream pipe connection to ensure the plug is not lost in the downstream sewer segment if it becomes dislodged from the upstream pipe connection.
b. Conduct all cleaning and CCTV operations to prevent building backups and sewer overflows.
c. Subcontractor shall be responsible for cleanup, repair, fines, property damage costs, and claims for any sewage backup, spillage or sanitary sewer overflow during or as a result of the cleaning and inspection operations.

2. Allowable Depth of Flow For Inspection Operations
   a. For effective inspection, all flow shall be minimized in the segment being inspected. However, the depth of flow at the upstream manhole of the interceptor section being worked shall be within the specified limits provided herein.
3. Maximum Allowable Depth of Flow for CCTV Inspection
   a. 6 - 10 inch diameter Pipe - 20% of pipe diameter
   b. 12 - 18 inch diameter Pipe - 25% of pipe diameter
   c. 24-inch diameter and Larger Pipe - 30% of pipe diameter
   d. Exceptions to these guidelines shall result in rejection, and non-payment, of the CCTV inspection unless approved in advance by the Program Manager.

C. Camera Operations

1. Using the pan/tilt feature, pan the interior of the manhole for record purposes in accordance with V.6.0.1 PACP protocols and begin and terminate the inspection in the starting and ending manholes.
   a. Capture the inside of manhole walls, manhole channel, and pipe connection to wall at both upstream and downstream manhole and lateral connections using the digital mainline sewer camera and the pan/tilt feature.
2. Place the camera at center of manhole and commence video before entering pipe.
   a. Start footage counter at manhole wall/pipe connection or at a short pre-measured distance down the pipe for the sewer segment inspection.
3. Connections: The digital camera shall be used to look at connections and up laterals from the connection in the main sewer pipe being inspected. The camera shall pause, pan, and record all connections. Conditions noted in these sidelines and laterals shall be noted on the inspection logs.

4. Mainline camera operations:
   a. Move through line at speed no greater than 30 feet per minute stopping for minimum 10 seconds to record lateral connections, mainline connections, defects, and features and points of interest.
   b. Do not float camera.
   c. Maintain technical quality, sharp focus, and distortion free picture with the camera lens centered in the pipe for the different diameters inspected.
      i. Eliminate steam in line for duration of inspection.
      ii. Utilize blower as needed to defog sewer line.
   d. Digitally record a complete sewer segment in its entirety with no breaks, “blink-outs,” or interruptions from manhole to manhole according to PACP V.6.0.1 formats.
   e. Pan, tilt, and rotate as necessary to best view and evaluate lateral connections, pipe defects, features, obstructions, and points of interest.
   f. Use power winches, powered rewinds, self-propelled tractors, or other devices that do not obstruct camera view or interfere with proper documentation of sewer conditions to move camera through sewer.
   i. Whenever non-remote powered and controlled winches are used, set up telephones or other suitable means of communication between manholes to insure good communication.
   g. Use hydraulic jet nozzle pressure and flow to remove standing water from depressions or sags in the sewer, if necessary, for complete inspection of the sag portion of the sewer segment.
   h. Measurement for location of defects and service laterals:
      i. At ground level by means of Program Manager-approved footage counter or metering device.
      ii. Electronic display measurement meters: Accurate to PACP standards over length of section being televised.
      iii. Do not pull unnecessary length of slack camera cable if it impacts the footage counter.
   i. Stop camera at service connections and inspect lateral with pan and tilt camera.
      i. Identify building connection in PACP compliant terms as active, capped, or abandoned.
      ii. If no wastewater flows are being discharged from building, consider steady, clear observed flow as infiltration/inflow.
   j. Identification of defects.
      i. If roots, sludge, or sediment material impedes inspection after the light cleaning, withdraw camera and perform heavy cleaning at the direction of the Program Manager.

ii. Upon completion of heavy cleaning operation, resume internal inspection.
iii. Furnish media confirmation for heavy cleaning (more than three passes with jet cleaner) to Program Manager.
iv. If protruding tap impedes inspection trim protruding tap to 1/2 inch.

k. If obstructions are not passable and cannot be removed by sewer cleaning, withdraw CCTV equipment and perform a reverse inspection from opposite end of the sewer segment in accordance with PACP protocols.
   i. Subcontractor shall be responsible for costs associated for reverse set-ups when an obstruction is encountered that cannot be passed.
   ii. Subcontractor shall be responsible for all judgments and impacts as to whether an obstruction in the sewer main can be passed. Costs involved in extracting a stuck camera in the sewer main will be borne by the Subcontractor and at no additional cost to the Program Manager.
   iii. When additional obstructions are encountered after reversal of equipment and no means are available for passing a second obstruction in order to complete the sewer main inspection, remand the segment inspection to the Program Manager for resolution. The portion of the main inspected will be paid for as prescribed.

l. Undocumented facilities
   i. If undocumented manholes or sewer mains (facilities not on the field updated GIS sewer maps) are encountered during the inspection, the Subcontractor needs to complete the documentation requirements per PACP requirements and capture on the video the following:
      1. Approximate horizontal distance from the upstream or reference manhole.
      2. Approximate depth of the undocumented manhole by turning the pan/tilt camera vertically and estimating the height of the cover from the invert.
      3. A provisional manhole asset ID number shall be used by the Subcontractor by adding a dash and two-character number to the closest upstream manhole ID.

D. Quality Assurance

1. The Subcontractor shall provide a QA/QC of each deliverable documenting that 10% of all CCTV data has undergone a random independent review by a PACP certified reviewer using NASSCO

standards for Television Inspection of Main Sewer and PACP Quality control as the basis for the QA/QC procedures. Internal independent QA/QC is acceptable, as long as the person is a Tennessee P.E. or is a P.E. in another state and has a Tennessee P.E. license pending.

2. For all new Subcontractors and Operators who begin PACP coding, an initial review of CCTV data will consist of reviewing, at a minimum, 20 of the first 100 PACP inspection records submitted. Subsequent reviews will be based on the results of the initial reviews as explained below.
3. Auditing Procedures:
   a. Header information: As explained in the NASSCO PACP Quality Control Standards each audited inspection record is given an accuracy level for the header information and the detailed observation records. It is expected that the accuracy of the header record exceed 90% because the majority of the contents are based upon facts and not subject to operator judgment. To assess the accuracy level of the header, record the number of errors as compared to the total number of header fields using the following formula:

      100% - (error count/total header fields)*100% = Header Accuracy

   b. Detailed Observations: Determining the accuracy level for the detailed observation records is similar to the method for assessing the header record. The main difference being that a defect observation has multiple data entries that must also be counted towards the total number of entry fields. In the event that a defect is not coded all of the required entries for coding the missed defect are counted towards the total error count. The following formula is used to calculate the accuracy level of the detailed observation records:

      100% - (error count/total entries) * 100% = Detail Accuracy

   c. Review Scoring and Results
      i. Satisfactory Review, No changes required. Accuracy Level of 90% or above for both the Header Record and Observation Detail with no major errors or omissions found.
      ii. Unsatisfactory Review (below levels of acceptance) will not be accepted by the Program Manager and will not be considered payable items in the Subcontractor's Request for Payment.

E. <u>Deliverable Documentation</u>

1. Mainline Sewer.
   a. Submit V.6.0.1 PACP compliant records, logs, and electronic inspection data for sewer line inspection to Program Manager by

the close of business on the Monday following a week after data acquisition.

b. Digital videos, data, and photos shall be delivered to the Program Manager on external hard drives which will become property of the Program Manager.
c. Data files shall be formatted to facilitate upload into a PACP Exchange Database with the approval of the Program Manager.
d. Inspections displaying poor digital video/audio quality will be rejected. Quality refers to, but is not limited to, grease or debris on lens, camera under water, image too dark or light, image washed-out, distorted image, out of focus images, lines improperly cleaned, and poor/no audio.
    i. Subcontractor will re-televise rejected inspections and resubmit inspections at no additional cost to the Program Manager.

2. Map changes/undocumented manholes:
    a. For map changes identifying undocumented manholes which were found as a result of field inspections or observations, a site sketch shall also be prepared and supplied by the Subcontractor with a drawing or sketch and shall indicate special details, field measurement or distances, or locations about an observed undocumented manhole.

F. Easement or Turf Operation

1. The Subcontractor will restore the work area to its original condition as quickly as possible after the inspection is complete. The Subcontractor will not be allowed to postpone restoration of the site until the end of the project.

PART 4 –DELIVERABLES

4.01 RECORDS

A. Pipe Cleaning Record

The Subcontractor shall provide a dated manifest of the volume or weight of the dewatered sewer cleaning loads taken and dumped at the permitted dump site selected by the Subcontractor. Each waste load manifest shall be associated with a list of corresponding sewer segments from where the waste originated.

B. Digital Inspection Record

In the digital PACP V.6.0.1 compliant format, the Subcontractor shall provide the following information:

1. Digital CCTV survey inspection which shall be recorded and shall be continuous as the inspection proceeds through the manholes and sewer pipes.
2. Digital Recordings: The digital recording shall document the visual and audio record of the manhole and sewer pipe inspection and shall be the basis of measurement and payment. Digital recording playback shall be at the same speed that it was recorded. Original digital recordings for the Project shall be forwarded to the Program Manager on clearly labeled external hard drive(s) in PACP ACCESS format with final report submittals and shall become the property of the Program Manager. Data for a single facility asset will not be split across multiple hard drives. Digital recordings shall be available to the Program Manager by the close of business on the Monday following a week after data acquisition. File naming must be consistent. Additional instructions, naming conventions, file structures, etc. will be provided after contract award.

   a. Picture Quality: The sewer inspection digital record shall be free of steam, fog, vapor, or other headspace distortion that degrades the quality of the picture from the intended purpose of evaluating the sewer for structural and watertight integrity. If necessary, the Subcontractor shall provide positive ventilation or other means through the sewer pipe to draw out steam, fog, and vapor that will degrade the recorded image of the pipe.

C. Inspection Documentation Logs

Observations made during television inspection shall be documented in an unmodified PACP compliant manner within an electronic inspection log form, supported by accompanying audio, digital photographs and MP-4 format recording written to an external hard drive and submitted to the Program Manager. Hard copies of completed inspection log photographs shall be furnished to the Program Manager with invoicing.

D. Electronic & Hard Copy Records

1. Reports:
   The Subcontractor shall prepare printed inspection log reports for each associated sewer pipes inspected during the actual field inspection activities. These field logs shall then be reviewed by the

Subcontractor's technical staff, along with reviewing the associated digital video record, as a means of ensuring that no defects or entries are omitted or incorrect. Edited field logs shall then be used in the final project reports and submitted in pdf format.

2. Draft Report and Final Report:
The Draft Final Report will contain electronic and hard copies of each of the PACP CCTV log pipe segment inspection logs. Digital recordings of the inspections written to an external hard drive and the PACP compliant database of the inspections in ACCESS format shall also be submitted in electronic and pdf format.

Draft Report shall be delivered to the Program Manager within fifteen working days the last or final inspection. The Program Manager will have two workweeks to review and comment. Subcontractor shall address all comments provided and submit a Final Report within one workweek upon receipt of comments. At the Program Manager's discretion a meeting will be held so the Subcontractor can explain the processes used to address the comments.

E. Meetings

The Program Team will arrange bi-weekly meetings (every other week) with the Subcontractor to discuss data management and field issues.

F. Quality

Rejection of deliverables will be submitted to the Subcontractor via the Program Team in a formal letter discussing issues that must be addressed. The Subcontractor will be required to follow up with a response within three business days of receiving the letter. Subcontractors will have seven (7) calendar days from rejection notice to make the necessary corrections and resubmit the packet.

PART 5 – MEASUREMENT

5.01 LIGHT CLEANING & CCTV INSPECTION

Light cleaning and mainline CCTV inspection shall be measured by linear foot by each diameter of mainline sewer inspected and documented in accordance with the specification.

5.02 HEAVY CLEANING

Heavy cleaning shall be measured by linear foot of each diameter of heavy cleaning approved by the Program Manager and documented.

PART 6 – PAYMENT

6.01 MAINLINE CCTV INSPECTION

Light cleaning and mainline CCTV inspection shall be paid for at the unit price for each linear foot for all diameters inspected and documented in accordance with the specification.

The unit price for Light Cleaning and Mainline CCTV inspection shall cover the entire cost of the required light cleaning and CCTV inspection and reporting in accordance with PACP V 6.0.1 format, including but not limited to labor, mobilization and access, CCTV equipment, recording media, traffic control, light cleaning of mainline sewer, documenting results in PACP records and logs, digital format recordings, photo equipment, power supply for equipment, interim and final reports and all other appurtenant work.

No additional payment will be made for:
1. Re-inspection due to rejected inspection and/or records for any reason.
2. Reversals.
3. Performing excavation and associated sewer point repair to retrieve a stuck CCTV camera or hydraulic cleaning hose/nozzle.
4. Incomplete electronic logs.

6.02 HEAVY CLEANING

Heavy Cleaning shall be paid for at the unit price for each linear foot for all diameters of heavy cleaned sewers at the direction of the Program Manager and in accordance with the specification.

The unit price for Heavy Cleaning shall include the entire cost including but not limited to labor, mobilization and access, traffic control, appropriate disposal of sewer debris removed from sewer at permitted site and all other appurtenant work. Payment includes non-hydraulic jet efforts such as porcupines, cutters, power rodding, clam buckets, and other mechanical means, traffic control, and re-cleaning with hydraulic jet, labor, materials, and equipment necessary to clean mainline sufficiently to allow video reviewers a clear picture of pipe conditions.

No additional payment will be made for:

1. Additional passes of heavy cleaning if the inspection observation reveals roots, grease or other debris remaining in the sewer after the heavy cleaning passes.

6.03 PAYMENT WILL BE MADE UNDER:

Item No.	Pay Item	Pay Unit
00003-6.01	LIGHT CLEANING & MAINLINE CCTV INSPECTION FOR ALL DIAMETERS	LF
00003-6.02	HEAVY CLEANING FOR ALL DIAMETERS	LF

END OF SECTION 00003

CITY OF MEMPHIS – STANDARD CONSTRUCITON SPECIFICATION modified by SARP10Program

SECTION 02540 SANITARY SEWER POINT REPAIRS

The Subcontractor shall complete the Work in accordance with Section 02540 herein and supplemented by the City of Memphis Standard Construction Specifications, which are available for viewing at the SARP10 Program Office.

PART 1 - SCOPE

This section covers the performance of point repairs on gravity sewer lines.

1.01 REFERENCES

A. City of Memphis Standard Construction Specifications.

B. American Standard for Testing and Materials (ASTM).

C. American National Standards Institute (ANSI).

1.02 DEFINITIONS

A point repair as used in these Specifications shall mean repair of pipe segments (up to 15 feet) of existing sanitary sewer mains or service lines which require excavation to accurately locate a defect and make the necessary repair.

PART 2 - MATERIALS AND EQUIPMENT

2.01 PIPE MATERIAL

All repairs to existing gravity sewer lines shall be made using ductile iron pipe. Ductile iron pipe for gravity sewer and service connections will conform to ASTM A 746. The pipe thickness design will conform to ANSI A 21.50. If no thickness class is specified on the Plans or Subcontract Documents, Class 50 or approved equivalent will be used. All ductile iron pipe will be lined with Protecto 401 Ceramic Epoxy, or approved equal. Linings will be applied according to manufacturer's recommendations. Fittings will conform to the requirements of ANSI A 21.10. Unless otherwise specified, joints will be push on gasket type conforming to the requirements of ANSI A 21.11. Mechanical joints will conform to the requirements of ANSI A 21.11. Flanged joints will conform to the requirements of ANSI A 21.15. Steel retainer rings will conform to ASTM A 148 for Grade 90 60.

2.02 ELASTOMERIC COUPLINGS

Elastomeric couplings for connecting replacement pipe to existing pipe shall be Fernco Series 5000 RC Shielded Couplings with nut and bolt clamp, Mission "Flex-Seal" adjustable shielded repair coupling or approved equal.

2.03 BACKFILL UNDER PAVEMENT

Backfill beneath all paved areas shall be either crushed limestone or recycled crushed concrete.

Crushed limestone will be size No. 67 Coarse Aggregate meeting the requirements of the Tennessee DOT Standard Specifications for Road and Bridge Construction and the following gradation:

	Total Percent by Dry Weight, Passing Each Sieve (U.S. Standard)				
Size No.	1"	3/4"	3/8"	No. 4	No. 8
67	100	90-100	20-55	0-10	0-5

PART 3 - CONSTRUCTION REQUIREMENTS

3.01 SITE PREPARATION AND RESTORATION

A. Rights-of-Way and Easements

The Subcontractor will confine his construction activities to the existing rights-of-way or sanitary sewer easements. The Subcontractor will be responsible for obtaining written agreements for use of private property outside City acquired rights of way/easements for such purposes as storage of material and equipment and access to the construction site. The Subcontractor will immediately provide a copy of all such written agreements to the City upon obtaining the same.

B. Clearing of Rights-of-Way and Easements

The Subcontractor will confine his clearing of rights of way and easements to the least area necessary for construction of facilities shown on the Plans. The Subcontractor will protect as many trees and shrubs within the area as possible. Where necessary for construction, the Subcontractor will clear all live and dead vegetation and growth, pole stubs, logs, and other objectionable material. Cleared material will be removed to within 3 inches of existing ground. This work will be done well before excavation operations but only after erosion controls have been placed.

C. Location of Existing Obstructions

Locations of obstructions shown on the Plans are approximate and are not intended as an accurate location of such obstructions. Obstructions not shown on the Plans but encountered by the Subcontractor will be removed and replaced in their original state or protected by the Subcontractor at no additional cost to the City.

D. Removal of Obstructions

The Subcontractor will demolish and remove all structures and structure foundations, abandoned vehicles, appliances, and rubbish within the right of way/easement limits necessary for the performance of the work.

E. Protection of Obstructions Outside Easement Limits

The Subcontractor will protect and avoid damage to all trees, shrubs, plants, fences, structures, and all other objects outside the right of way/easement limits shown on the Plans and/or Plats due to construction operations. All damage will be repaired or restored at the Subcontractor's expense. Particular attention will

be paid to avoid damage to trees, shrubs, bushes, and private property located next to rights of way/easements. No trees, plants, or other objects may be removed out-side such limits without written permission of the property owner.

F. Special Protection of Obstructions Inside Easement Limits

Wherever the underground installation of sanitary sewer facilities will go through surface improvements previously made by the City, other governmental bodies, or property owners, the Subcontractor will be responsible for their protection and preservation. This responsibility includes the removal and storage of such improvements to allow replacement and restoration as close as possible to the undisturbed condition.

G. Disposal of Debris

All trees, brush, logs, snags, leaves, sawdust, bark, and refuse will be collected and disposed of according to the City Code of Ordinances at the expense of the Subcontractor. There will be no separate pay item for disposal of debris. Debris will be removed from the site when practical and will not be left until the completion of the contract. When material is to be disposed of outside the easement, the Subcontractor will first obtain written permission from the property owner on whose property the disposal is to be made and will file a copy with the Purchaser. Unless otherwise provided in the Subcontract Documents, the Subcontractor will arrange for disposing of such material outside the right of way/easement. No debris will be deposited in wetlands.

H. Replacement of Fences

Any fences disturbed inside the right of way/easement limits will be replaced or restored to their original or better condition. Any fences removed will be replaced in their original location. Fences in such poor condition that they cannot be taken down and rebuilt with the same material will be replaced with new fence material similar in original quality, size, and appearance to the removed fence. Exceptions to this requirement will be allowed if written releases are obtained from the property owners by the Subcontractor and submitted to the Purchaser.

I. Disposition of Excavated Material

1. Excavated material suitable for backfill will be stored no closer than 2 feet from the edge of the excavation. Excavated material will not obstruct crosswalks, side-walks, driveways, street intersections, nor interfere unreasonably with travel on streets. Gutters or other surface drainage facilities will not be obstructed. The Subcontractor must provide access to fire hydrants, mail boxes, sewer and conduit manholes and similar utility or municipal service facility as required. Excavated material intended for backfill will be stored in a way that minimizes loss of excavated material due to erosion. The Subcontractor shall comply with all applicable OSHA regulations and City of Memphis Storm Water Ordinances.

2. Unless otherwise directed, all excavated material that will not be used for backfilling or restoration will be removed from the site and disposed of by the Subcontractor. If the Subcontractor proposes to store or place such excess excavated material upon any private property, written consent of the property

owner or owners must be obtained by the Subcontractor in advance. A certified copy will be given to the Purchaser. No surplus or excess material will be deposited in any stream channel nor anywhere that would change preconstruction surface drainage.

J. Control of Water

1. The Subcontractor will keep all excavations free of water. If the trench subgrade consists of good soil in good condition at the time of excavation, it will be the Subcontractor's responsibility to maintain it in suitable condition. Dams, flumes, channels, sumps, or other work and equipment necessary to keep the excavation clear of water will be provided by the contractor. Dewatering of trenches, will be incidental to trench excavation. The Subcontractor will avoid producing mud in the trench bottom by his operations. If necessary or so ordered by the Purchaser, the Subcontractor will re-move any soil that becomes unacceptable and replace it with limestone or other approved aggregate at his own expense to maintain a firm, dry base.

2. Pipe bedding, laying, jointing, and the placing of concrete or masonry will be done in a water free trench or excavation. Trenches will be kept clear of water until pipe joints, concrete and masonry have set and are resistant to water damage. The water will be disposed of in a manner acceptable to the Purchaser.

3. All gutters, pipes, drains, conduits, culverts, catch basins, storm water inlets, ditches, creeks, and other storm water facilities will be kept in operation, or their flows will be satisfactorily diverted and provided for during construction. Any facilities disturbed during construction will be restored to the satisfaction of the Puchaser.

K. Excavation Around Obstructions

1. The Subcontractor will perform all excavation by hand where excavation by machinery would endanger trees, structures, or utilities that otherwise might be saved by hand excavation.

2. The Subcontractor will cautiously excavate test holes to find the limits of under-ground obstructions anticipated within the excavation. When a water pipe, gas pipe, other sanitary sewer, storm drain, or similar utility comes within the limits of the trench, such facilities will be properly supported.

L. Special Protection

1. Treacherous Ground: When running sand, quicksand, or other treacherous ground is encountered, the work will be carried on with the utmost urgency and will continue day and night should the Purchaser so direct.

2. Sheeting and Shoring: The Subcontractor will furnish, place, and maintain sheeting and shoring as required to support the sides of any excavation to prevent earth movement that could endanger the workers or public and to prevent damage to the excavation, adjacent utilities or property. The Subcontractor will place this sheeting and shoring without the Purchaser's instructions.

3. Sheeting will extend below structure invert a sufficient depth to assure adequate support. In the installation of sheeting, the use of vibratory type pile drivers (as opposed to impact type) will be limited to sheeting driven no greater than 5 feet below the invert. The sheeted trench width, as measured between those faces of the sheeting in contact with the earth trench wall, will not exceed the maximum width of a trench per Specification Section 02530 Paragraph 3.02.B. Walers and struts will be designed and installed to present no obstructions to proper placement of the pipe, bedding, cradle or encasement, and they will not interfere with the satisfactory installation of the pipe.

4. Sheeting, bracing, and shoring will be withdrawn and removed as the back-filling is being done, except where the Purchaser permits the material to be left in place. The Subcontractor will cut off sheeting left in place at least 2 feet below the surface and will remove the cut off material from the excavation.

5. All sheeting, bracing, and shoring which is not left in place under this provision will be removed in a way that will not endanger the completed work or other structures, utilities, storm drains, sewers, or property. The Subcontractor will be careful to prevent the opening of voids during the extraction process.

6. If sheeting and shoring are not specifically required on the Plans or in the Specifications, steel drag shields or trench boxes may be used subject to the authorization of the Purchaser. Voids left by the advancement of the shield will be carefully backfilled and compacted following trench backfill requirements.

M. Existing Utilities

1. Location: It will be the Suncontractor's responsibility to arrange for the location of existing utilities prior to excavation. The Subcontractor will also be responsible for coordinating the relocation of any existing utilities with the appropriate utility owner.

2. Protection: The Subcontractor will protect any storm drain, sewer, or utility within the limits of the construction. The Subcontractor will proceed with caution and will use every means to establish the exact location of underground structures and facilities before excavating in the vicinity. The City or Purchaser will not be responsible for the cost of protection or repair or replacement of any structure, pipe line, conduit, service connection, or similar facility broken or damaged by the Subcontractor's operations. All water and gas pipes and other conduits near or crossing the excavation will be properly supported and protected by the Subcontractor.

3. If the construction requires the removal and replacement of any overhead wires or poles, underground pipes, conduits, structures or other facilities, the Subcontractor will arrange for such work with the Owner or Owners of the facilities. No additional payment will be made by the City or Purchaser for this work.

4. Service Connections: Sewer and utility services between mains and buildings will be maintained and adjusted as necessary by the Subcontractor to provide as

nearly a continuous operation as can be expected. This will be accomplished in any way that the Subcontractor chooses, provided the individual service is not interrupted for more than two consecutive hours. The occupants will be notified by the Subcontractor at least six hours before such service interruptions. When a break occurs, the Subcontractor will notify the affected occupant(s) of the probable length of time that the service will be interrupted.

5. If existing underground facilities or utilities require removal and replacement for the performance of this work, all replacements will be made with new material conforming to the requirements of these Specifications. If not specified, the material will be as approved by the Purchaser.

6. The removal and replacement of water services to adapt to new construction will be the Subcontractor's responsibility within the limits where the new service line grade blends smoothly with the existing service line grade.

7. The removal and replacement of sewer house connections to adapt to new construction will be the Subcontractor's responsibility from the sewer main to a point where the new grade and existing grade can be matched.

8. The Subcontractor will be responsible for any damage to the sewer house connection because of his operations. The Purchaser does not guarantee the number, size, condition, nor length of adjustment necessary to bring a service to a new grade.

N. Maintenance of Flow

Where existing sewer lines are being modified, the Subcontractor will arrange his work so that sewage flow will be maintained during the construction period with no discharge of sewage into the open trench, and no back up of sewage in the existing line. The Subcontractor will provide necessary bypass pumping capacity to carry flow downstream of the section to be modified.

3.02 BACKFILLING

A. General

1. After sanitary sewer facilities have been bedded and installed according to these Specifications and upon permission of the Purchaser, the backfill may be placed. Backfilling operations will continue following as closely behind pipe installation as practical. All backfill will be placed in uniform horizontal layers. Pushing backfill material down a ramp into excavated areas will not be permitted. No trash will be allowed to accumulate in the space to be backfilled. Particular care will be taken to avoid allowing wood to be included in the backfill, other than sheeting and shoring that has been approved to be left in place.

2. The Subcontractor will be responsible for the condition of the trenches and filled areas during the contract and warranty period. The Subcontractor will maintain

frequent inspection of the same. Anytime during the 12-month warranty period the trenches or filled areas settle and sunken places appear, the Subcontractor will be required to refill these sunken places when they are discovered with suitable material and will replace all damaged curb, gutter, and sidewalk. All soft or dangerous trenches will be marked, barricaded and caution lighted for the protection of the public.

3. Property with an existing dwelling located on it or lots within a developed subdivision or planned development are considered improved property.

B. Street Right of Way and Improved Property

1. Backfill Material: Backfill for pipe trench excavations through pavements in street or highway right of way or where the Purchaser orders, will be made with pit run gravel or other acceptable material as approved by the Purchaser. The backfill will be from the top of the bedding material or foundation to the subgrade elevation of the pavement. Pea gravel or similar granular material approximately uniform in size and without bonding properties will not be used.

2. Backfill for pipe trench excavations beyond pavements in street or highway right of way or outside public right of way will be made with select earth from the top level of the bedding material or foundation to the subgrade elevation in paved area, or within 1 inch of the surface in areas to be sodded, or to the surface in all other areas.

3. Select material will be free from debris, organic matter, perishable compressible material and will contain no stones or lumps larger than 6 inches. Rocks and lumps smaller than 6 inches will not exceed an amount that will interfere with the consolidating properties of the fill material. Care will be taken that stones and lumps are kept separated and well distributed, and that all voids are completely filled with fine material. No rocks or lumps will come in direct contact with the pipe. The upper 3 feet of backfill in sodded or planted areas will be free of rocks or lumps larger than 1 inch in diameter.

4. Placement and Compaction: Backfill material will be placed by hand in 6 inch loose layers and tamped to a point 2 feet above the outside top of the pipe. Backfill will be compacted with suitable mechanical tamping equipment with special care being taken not to damage the pipe or joints. Use of compaction equipment directly above semi-rigid and flexible pipe should be avoided until sufficient backfill has been placed to ensure that the equipment will not damage the pipe. A minimum of 36 inches of compacted backfill above the top of semi-rigid and flexible pipe will be in place before wheel loading and a minimum of 48 inches of compacted backfill before use of pneumatic tampers. From these elevations to the subgrade elevation of the pavement, bottom of the sod, or to the original ground surface, suitable backfill will be mechanically placed in 9 inch, maximum, loose layers. All backfill material will be compacted to 95 percent of maximum density at plus or minus 2 percent of optimum moisture content as determined by Laboratory Standard Proctor Test (ASTM D 698).

C. Open Areas and Unimproved Property

Backfill of excavations on unimproved property will be made with select material from the top level of bedding material or foundation to the surface. Non-granular select material to be used for backfill will be free from debris, organic matter and perishable compressible material, and will contain no stones or lumps or rock fragments larger than 6 inches. Rocks or lumps smaller than 6 inches in diameter will not exceed an amount that will interfere with the consolidating properties of the fill material. No rocks or lumps will come in direct contact with the pipe. Stones and lumps will be kept separated and well distributed, and all voids will be completely filled with fine material.

3.03 METHOD OF REPAIR

A. The Subcontractor shall replace a sufficient number of entire pipe joints to ensure that defective pipe is removed and replaced a minimum of 10 feet up to a maximum length, per repair, of 15 feet, in accordance with the SARP10 Sanitary Sewer Point Repair detail.

B. If the length of the required replacement segment is not adequate to locate sufficient competent pipe for connection with the new section, the Subcontractor, at the Purchaser's instruction, may be directed to replace additional sections of pipe such that an appropriate connection is possible.

C. The Subcontractor shall replace service wyes encountered within the point repair. Any defective service lines encountered within the point repair shall be replaced.

D. Any service line or competent main line pipe broken by the Subcontractor shall be replaced at the Subcontractor's expense.

E. The Subcontractor shall remove any fences, base materials, storm sewer, etc. that may interfere with the repair made at each specified point. The Subcontractor is responsible for the replacement of said fences, base materials, storm sewer etc., in the same or better condition than found.

F. The bottom of the trench shall be reshaped so that the grade of the pipe replaced will match that required for the existing sewer line. The point repair shall be backfilled in accordance with Section 02530 Sewer Pipe Installation of the City of Memphis Standard Construction Specifications.

G. If the material in the bottom of the trench is of such consistency that it is not stable, then the Subcontractor shall stabilize the bottom of the trench by placing suitable materials at the direction of the Purchaser.

H. Prior to backfilling, point repairs shall be inspected by the Purchaser.

3.04 VISUAL INSPECTION

All work will be subject to visual inspection for faults or defects and any such deviation or omission will be corrected at once. All tests will be made by the Subcontractor who will provide necessary equipment for testing and lamping the

system in the presence of and under the supervision and instructions of the Purchaser. Lamp tests will be observed first hand by the Purchaser. Each section of sewer line will show a full circle of light when lamped between manholes. All defects located will be corrected before conducting leakage tests

After backfilling and resurfacing, sewer segments containing point repairs shall be internally televised (CCTV) by the Subcontractor in their entirety in accordance with Section 00003 – Closed Circuit Television Inspection of Sewer Mains and Connections for final review and approval by the Purchaser.

3.05 TRAFFIC CONTROL

All traffic control shall be installed and maintained in accordance with the Manual on Uniform Traffic Control Devices (MUTCD). At a minimum, the Subcontractor must have two trucks with flashing yellow lights on the work site. Traffic cones must also be placed downstream of the construction site to divert cars into the adjacent lane(s) per MUTCD requirements. On roads with a heavy traffic volume, a flagman may also be needed to assist with traffic control. For bidding purposes, the Subcontractor should assume that a flagman will be needed on 30 percent of the setups.

3.06 FALL PROTECTION

Subcontractor shall install and maintain all fall protection measures in accordance with the SARP10 Loss Control Manual. The Subcontractor shall construct a controlled access zone around the manhole being adjusted. At a minimum, the fall protection zone shall include traffic cones encircled with pennant tape. The controlled access zone must have one point of access with an entrance log.

3.07 REMOVAL & REPLACEMENT OF VEGETATED AREAS

The Subcontractor shall remove the vegetated area around a manhole as needed to adjust the manhole frame and cover. All disturbed areas shall be restored as nearly as practical to their original condition. The disturbed area shall be cleared and raked to the level of the existing turf and then watered. New sod shall be installed over the entire disturbed area. New sod shall consist of live, dense, well rooted growth of Bermuda grass, free from Johnson grass, nutgrass, and other obnoxious grasses or weeds, well suited for the intended purpose and for the soil in which it is to be planted. All sod shall be cleanly cut in strips having a reasonably uniform thickness of not less than 2 inches and cut in 10 to 12 inch squares.

3.08 CLEANUP

After the installation work has been completed, the Subcontractor shall cleanup the entire project area. All excess material and debris not incorporated into the permanent installation shall be disposed of by the Subcontractor. The work area shall be left in a condition equal to or better than it was prior to the performance of the Work. Disturbed grassed areas shall be seeded or sod placed as directed

by the Purchaser at no additional cost to the Owner. Site restoration shall be performed in accordance with the City of Memphis Standard Construction Specifications.

PART 4 – MEASUREMENT

4.01 SEWER POINT REPAIR
Sewer point repairs will be measured per each. The minimum repair length of ten linear feet will be measured along the centerline of the new pipe.

4.02 TRAFFIC CONTROL
Traffic control will be paid per each sewer point repair.

4.03 REMOVAL & REPLACEMENT OF VEGETATED AREAS
The removal and replacement of vegetated areas shall be measured per square yard upon which the new sod has been set.

4.04 PAVEMENT BACKFILL
Crushed limestone or recycled crushed concrete for backfill under pavements or other areas directed by the Purchaser will be measured by the ton of material in place.

PART 5 – PAYMENT

5.01 SEWER POINT REPAIR

The accepted quantities of all mainline sewer point repairs will be paid for at the contract unit price per each for the various pipe sizes and depth of repair, which will be full compensation for material and material testing, excavation, special protection, protection of existing utilities, maintenance of sewage flow, bedding, laying, jointing, cleaning and inspection, conducting acceptance tests, installation of pipe wyes, connection to manholes, adapters and couplings, stoppers, and removal and/or abandonment of existing pipe within the limits of excavation and backfilling outside pavement areas.

5.02 TRAFFIC CONTROL

Traffic control will be paid per each sewer point repair including all appurtenances required to comply with MUTCD standards.

5.03 REMOVAL & REPLACEMENT OF VEGETATED AREA

Removal and replacement of vegetated area will be paid for at the Subcontract unit price per square yard for the accepted quantities, which price will be full payment for furnishing, setting, pinning and pegging if required, fertilizing, watering, mowing, providing and placing agricultural limestone, and for the maintenance and repair of the sodded area.

5.04 PAVEMENT BACKFILL

Accepted quantities of pit run gravel or other acceptable material used for backfill under pavements or other areas designated by the Purchaser will be paid for at the Subcontract

unit price per ton furnished and placed, which will be full compensation for furnishing, placing and compacting the selected material.

5.05 PAYMENT WILL BE MADE UNDER:

Item No.	Pay Item	Pay Unit
02540-5.01.01	Sewer Point Repair, 6” through 10” Pipe (<10’ Deep)	Each
02540-5.01.02	Sewer Point Repair, 6” through 10” Pipe (10.1’-15’ Deep)	Each
02540-5.01.03	Sewer Point Repair, 6” through 10” Pipe (15.1’-20’ Deep)	Each
02540-5.01.04	Sewer Point Repair, 12” through 18” Pipe (<10’ Deep)	Each
02540-5.01.05	Sewer Point Repair, 12” through 18” Pipe (10.1’-15’ Deep)	Each
02540-5.01.06	Sewer Point Repair, 12” through 18” Pipe (15.1’-20’ Deep)	Each
02540-5.01.07	Sewer Point Repair, 21” through 24” Pipe (<10’ Deep)	Each
02540-5.01.08	Sewer Point Repair, 21” through 24” Pipe (10.1’-15’ Deep)	Each
02540-5.01.09	Sewer Point Repair, 21” through 24” Pipe (15.1’-20’ Deep)	Each
02540-5.02	Traffic Control per Point Repair	Each
02540-5.03	Removal & Replacement of Vegetated Area	SY
02540-5.04	Pavement Backfill	Ton

END OF SECTION 02540

SECTION 02950 REMOVAL AND REPLACEMENT OF PAVEMENTS AND INCIDENTALS

PART 1 – SCOPE

This Work shall consist of the removal and replacement of pavements, sidewalks, driveway aprons, curbs and gutters, driveways, paved areas, and curbs made necessary by the improvement of sanitary sewer infrastructure, and other items of construction that require temporary cuts. Such replacement shall be to a condition at least equal to the condition existing prior to removal and of in-kind material and shall be compliance with the Drawings, these Specifications, or as directed by the Purchaser. The Work which will be included in the Subcontract and for which the Subcontractor shall be compensated therefore is limited to that area within the rights-of-way and construction easements for the Project. The Subcontractor will not be compensated for the removal and replacement of facilities outside the rights-of-way, easements, and limits of construction of the Project.

PART 2 – MATERIALS AND EQUIPMENT

2.01 MATERIALS

A. Concrete: Portland cement concrete shall have a minimum 28 Day compressive strength of 3,000 psi with a slump of 3-5 inches. The portland cement used in the mix shall be Type I cement conforming to the requirements of AASHTO M 85. The delivery ticket accompanying each load of concrete shall show the class and quantity of concrete, the quantity of cement, aggregates, water, and additive used in the batch, and the time of batching. Materials used in the concrete shall be tested and approved.

B. Asphaltic Concrete Pavement: Asphaltic concrete surface courses shall meet the requirements of Mix No. 1 and bases courses shall meet the requirements of Mix No. 2 as described below.

1. The composition of the mixes shall be as follows:

Total Percent Passing by Weight

Sieve Size	Mix No. 1	Mix No. 2
2”	100	100
1-1/2”	100	100
3/4”	100	100
3/8”	76 - 96	65 - 95
No. 4	51 - 76	45 - 70
No. 8	36 - 60	25 - 50
No. 30	16 - 40	12 - 30
No. 100	3 - 12	2 - 12
No. 200	2 - 8	1 - 6

2. The proportions of the total mixture, in percent by weight, shall be as follows:

Courses	Combined Mineral Aggregate	Asphalt Cement
Mix No. 1, Surface	92.0 – 96.0	4.0 – 8.0
Mix No. 2, Binder	93.0 – 97.5	2.5 – 7.0

3. It is the intent of this Section of the Specifications that the above described mixes shall conform to the following mixtures specified in the Tennessee Department of Transportation Standard Specifications for Road and Bridge construction.

   Mix No. 1 – Section 411, Asphaltic Concrete Surface (Hot Mix), Grading E.
   Mix No. 2 – Section 307, Bituminous Plant Mix Base (Hot Mix), Aggregate Grading C.

4. For multiple layer construction, succeeding layers shall not be laid until the previous layer has cooled sufficiently to support the construction equipment

5. When Mix No. 1 is to be used as a surface for traffic lanes, the mineral aggregate shall be composed of not less than 50 percent nor more than 55 percent crushed limestone and not more than 50 percent nor less than 45 percent natural sand. When Mix No. 1 is used for surfacing of shoulders or other non-traffic lane construction, the mineral aggregate may be composed entirely of limestone, including screening and manufactured sand, but in no case shall the mineral aggregate for this construction consist of less than 50 percent limestone. The natural sand shall be so graded that not more than 5 percent will be retained on the No. 4 sieve.

C. Expansion Joint Filler: Preformed expansion joint filler shall be of the bituminous type, shall conform to the requirements of AASHTO M 213 and shall not be more than 1 inch or less than 1/2 inch in thickness. The filler shall be cut to the full depth of pavement, curb and gutter, sidewalk, or driveway being replaced.

D. Gravel Pavement or Base: Crushed limestone with such material as manufactured sand or other fine materials naturally contained or added thereto as needed to match existing conditions and conform to the gradations shown below:

   Grading Table for Graded Aggregate Base Course
   Total Percent, by Dry Weight, Passing Each Sieve (U.S. Standard)

Size No.	2 ½ "	2"	1 ½ "	1"	3/8"	No. 40
1	100	95-100			35-65	10-30

2.02 EQUIPMENT

A. Equipment and tools necessary for cutting, removal, and hauling of existing items; handling and placement of new material; and all equipment necessary to perform all parts of the Work shall be at the job site sufficiently ahead of the start of construction operations to be examined and approved by the Purchaser.

B. When saws are used to cut pavement, the Subcontractor shall provide sawing equipment adequate in power to complete the sawing to a minimum of 1-1/2 inches below the pavement surface in one pass. An ample supply of saw blades shall be maintained at the site of the Work at all times during sawing operations.

C. Other types of pavement cutting equipment shall be capable of cutting the pavement to a neat straight line of 1-1/2 inch minimum depth below the pavement surface in one pass.

D. The Subcontractor shall provide equipment capable of removal of pavements, sidewalks, driveway aprons, curbs and gutters, driveways, paved areas, and curbs without disturbance of adjacent items to remain in place.

PART 3 – CONSTRUCTION REQUIREMENTS

3.01 REMOVAL OF ASPHALT PAVEMENT
Asphalt pavement shall be removed to a clean straight line as shown on the drawing details. Pavement shall be cut by saw or other equipment approved by the Purchaser in advance. Edges of existing asphalt pavement adjacent to trenches, where damaged, shall be recut in a clean straight line within the limits of damaged pavement only. Such recuts shall be parallel to the original cuts and perpendicular to the pavement surface.

3.02 REMOVAL OF CONCRETE PAVEMENT
Concrete pavement shall be removed to a neat straight line as shown on the drawing details. Care shall be used to avoid damage to pavements and to the pavement base remaining in place.

3.03 REMOVAL OF CONCRETE SIDEWALK, CURB AND GUTTER, AND DRIVEWAY
Concrete sidewalks, curbs and gutters, and driveways shall be removed to the nearest contraction or expansion joint. Care shall be used to avoid damage to sidewalks, curbs and gutters, and driveways remaining in place.

3.04 REMOVAL OF GRAVEL PAVEMENT
Gravel surfaces encountered in construction shall be removed as needed to allow for the adjustment of the manhole frame and cover.

3.05 REPLACEMENT OF PAVEMENT

A. Asphalt Pavements

1. Replace asphalt paving courses to match existing thickness. The minimum surface course thickness shall be 2 inches. Asphalt pavement and base replacement shall be constructed for the entire cross-section of pavement removal area including all areas where pavement was re-cut subsequent to the initial pavement removal.

B. Concrete Pavements

1. Concrete pavement shall be replaced with Class A concrete pavement equal in thickness to the pavement removed but not less than 4 inches thick. Concrete pavement and base replacement shall be constructed for the entire cross-section of pavement removal area including all areas where pavement was re-cut subsequent to the initial pavement removal.

2. Reasonable efforts shall be made to avoid contrast in the color and texture of existing and restored surfaces.

C. Placing, Curing, and Protection of Concrete

1. After the backfill in the trench has been brought to the appropriate subgrade elevation shown on the Plans, compacted to the specified density, and permission has been given by the Purchaser, a concrete slab of the appropriate thickness shall be placed within the entire disturbed area.

2. Any loose or disturbed pavement or base shall be removed prior to placement of the concrete. Concrete shall be placed only on a moist subgrade and shall not be

placed unless the ambient temperature is 35° F and rising. In no case shall concrete be placed on a frozen or frosty subgrade. After the concrete is placed, it shall be struck off in an approved manner to the appropriate grade as shown on the Plans and shall be finished with floats and straight edges until the required surface texture has been obtained.

3. No vehicles or loads shall be permitted on any concrete until the Purchaser has determined that the concrete has obtained sufficient strength for such loads. The Subcontractor shall construct and place such barricades and protection devices as are necessary to protect the concrete.

3.06 REPLACEMENT OF SIDEWALKS, DRIVEWAY APRONS, CURBS AND GUTTERS, DRIVEWAYS AND OTHER PAVED AREAS, AND CURBS

A. Concrete sidewalks and driveway aprons shall be replaced in accordance with the City of Memphis Standard Construction Specifications.

B. Unless otherwise directed, curb and gutter shall be replaced with new concrete curb and gutter of the same cross-section and at the same top of curb elevation and flow line as that removed. Where curb and gutter of a different type than existing is to be used for replacement, the replacement flow line shall match existing and a transitions section provided between the existing and replacement cross-sections. Curb heights shall be transitioned at a rate of 1 inch in 5 feet. Granite curb shall be replaced with new concrete curb whose height matches existing adjacent curb top elevations. Any expansion joint material removed shall be replaced at the original locations. Existing concrete edges shall be cleaned prior to placement of concrete. The finished curb and gutter cross-section, elevations, texture, and color shall conform to the adjacent concrete surfaces.

C. Replacement of paved areas other than street pavement; concrete, asphalt, or gravel driveways; and asphalt or concrete curb within the right-of-way or construction easement limits shall be in kind for those cross-sections removed, unless directed otherwise by the Purchaser.

3.07 DAMAGE DUE TO SETTLEMENT

A. The Subcontractor shall be responsible for any damage caused by settlement of backfill placed beneath pavements, sidewalks, driveway aprons, curbs, curbs and gutters, driveways, paved areas other than street pavement, and asphalt or concrete curb within the right-of-way or construction easement limits. This includes any damage which may occur at any time prior to, and during a period of one year from the date of Final Completion of the Work covered by the Subcontract.

B. During such period, the Subcontractor shall at his own cost and expense refill all excavations where settlement damage has occurred and replace damaged pavements, sidewalks, driveway aprons, curbs, curbs and gutters, paved areas, driveways, and all other damaged items to the satisfaction of the Purchaser. Should the Subcontractor fail to repair settlement damage which may occur as described above within 5 days after being given notice thereof, the Purchaser shall have the right to repair such settlement and charge the cost of such repairs to the Subcontractor.

3.08 DAMAGE OUTSIDE CONSTRUCTION EASEMENT LIMITS

The Subcontractor will be held responsible for all damage to roads, highways, shoulders, curbs and gutters, ditches, embankments, bridges, culverts, and other property, caused by him or any of this Sub-subcontractors in hauling or otherwise transporting materials to and from the several sites of Work, regardless of the location of such damage. The

Subcontractor shall make arrangements relative to the payment for, or repair or replacement of, such damage or damaged surfaces or structures which are satisfactory and acceptable to the Purchaser, at the Subcontractor's cost and expense.

PART 4 – MEASUREMENT

4.01 PAVEMENT REMOVAL AND REPLACEMENT
Pavement removal and replacement shall be measured for payment by the square yard, complete in place.

4.02 CONCRETE SIDEWALK REMOVAL AND REPLACEMENT
Sidewalk removal and replacement shall be measured for payment by the square foot, complete in place.

4.03 CONCRETE CURB AND GUTTER REMOVAL AND REPLACEMENT
Curb and gutter removal and replacement shall be measured for payment by the linear foot, complete in place.

4.04 GRAVEL DRIVEWAY AND GRAVEL AREA REMOVAL AND REPLACEMENT
Gravel driveways and gravel area removal and replacement shall be measured for payment by the ton of crushed limestone, complete in place.

PART 5 – PAYMENT

5.01 PAVEMENT REMOVAL AND REPLACEMENT
The accepted quantities of pavement removal and replacement shall be paid for at the Subcontract unit price per square yard for the type specified, which price will be full compensation for cutting and recutting pavement; removal and disposal of pavement and base; preparing the subgrade; placing, finishing, curing, and protection of concrete; and placing and compacting asphaltic concrete wearing surfaces, complete in place.

5.02 CONCRETE SIDEWALK REMOVAL AND REPLACEMENT
The accepted quantities of sidewalk removal and replacement shall be paid for at the contract unit price per square foot, which price will be full compensation for removal and disposal of sidewalk; preparing the subgrade; and placing, finishing, curing and protection of concrete, complete in place.

5.03 CONCRETE CURB AND GUTTER REMOVAL AND REPLACEMENT.
The accepted quantities of curb and gutter removal and replacement shall be paid for at the Subcontract unit price per linear foot for the type specified, which price will be full compensation for removal and disposal of curb and gutter; preparing the subgrade; and placing, finishing, curing and protection of concrete, complete in place.

5.04 GRAVEL DRIVEWAY AND GRAVEL AREA REMOVAL AND REPLACEMENT
The accepted quantities of gravel driveway and gravel area removal and replacement shall be paid for at the Subcontract unit price per ton of crushed limestone, which price will be full compensation for preparing the subgrade and replacing the gravel, complete in place.

5.05 PAYMENT WILL BE MADE UNDER:

Item No.	Pay Item	Pay Unit
02950-01.01	Asphaltic Concrete Pavement Removal and Replacement	Square Yard

02950-01.02	Concrete Pavement Removal and Replacement	Square Yard
02950-02	Concrete Sidewalk Removal and Replacement	Square Foot
02950-04	Concrete Curb And Gutter Removal and Replacement	Linear Foot
02950-06	Gravel Driveway And Gravel Area Removal and Replacement with Crushed Stone	Ton

END OF SECTION 02950

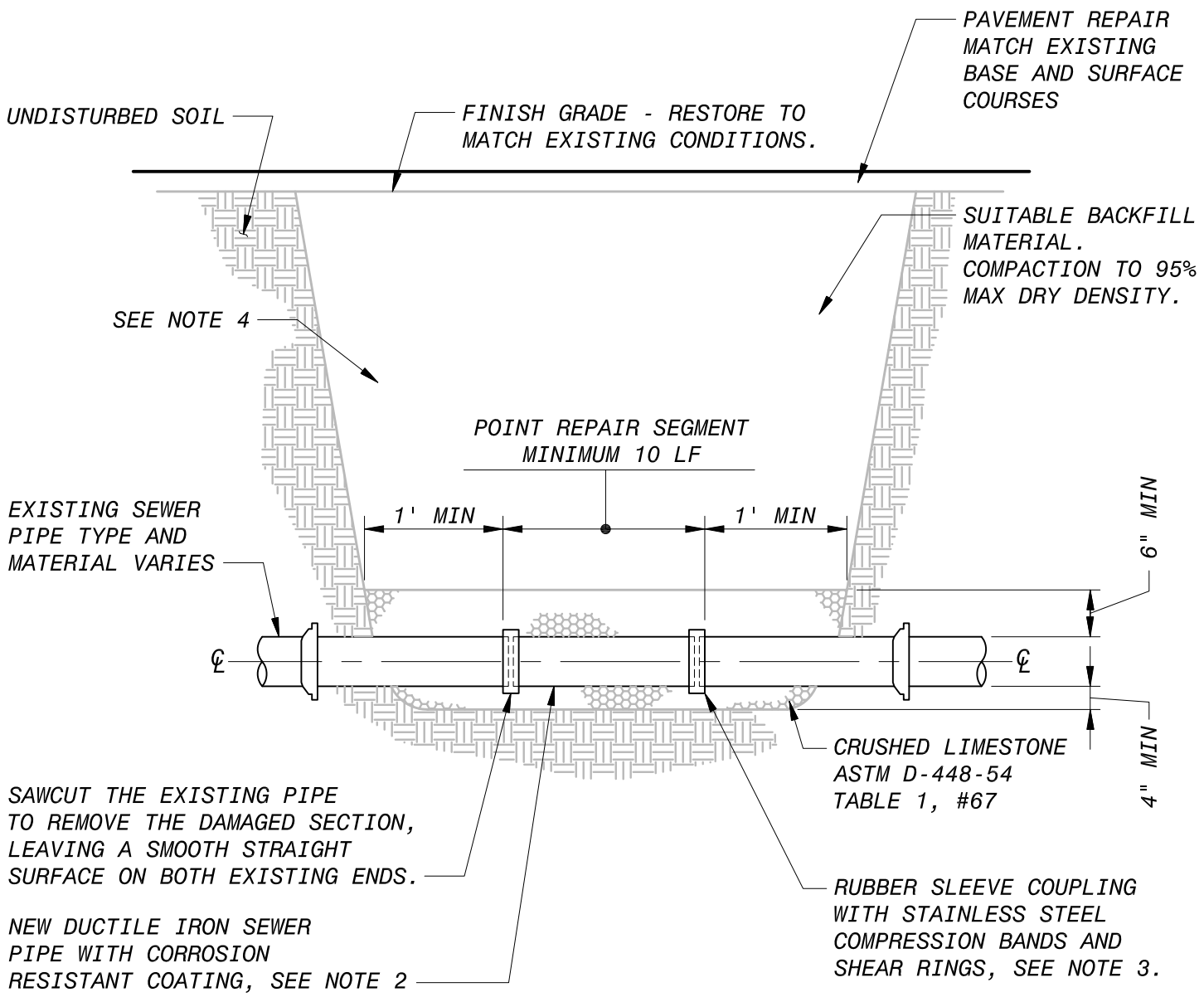

NOTES

1. CONSULT WITH SARP10 CONSTRUCTION MANAGER BEFORE MAKING REPAIRS REQUIRING MORE THAN 10 LF.
2. INSTALL NEW DUCTILE IRON SEWER PIPE, IN ACCORDANCE WITH CITY OF MEMPHIS STANDARD CONSTRUCTION SPECIFICATION SECTION 02530-SEWER PIPE INSTALLATION.
3. INSTALL FERNCO SERIES 5000RC SHIELDED COUPLINGS WITH NUT AND BOLT CLAMP, MISSION "FLEX-SEAL" ADJUSTABLE SHIELDED REPAIR COUPLINGS, OR APPROVED EQUAL.
4. REMOVE EXCAVATED MATERIAL UNDER PAVED SURFACES AND BACKFILL WITH CRUSHED LIMESTONE OR RECYCLED CRUSHED CONCRETE PER CITY OF MEMPHIS STANDARD SPECIFICATIONS.
5. CONTRACTOR IS RESPONSIBLE FOR INSTALLING AND MAINTAINING ALL EROSION AND SEDIMENT CONTROL DEVICES IN ACCORDANCE WITH ALL LAWS AND REGULATIONS.

MEMPHIS SEWER ASSESSMENT & REHABILITATION PROGRAM
SARP 10

BLACK & VEATCH
Building a world of difference.

SARP10

SANITARY SEWER POINT REPAIR

SCALE: NOT TO SCALE

REV 2.0

DATE: 06/27/14

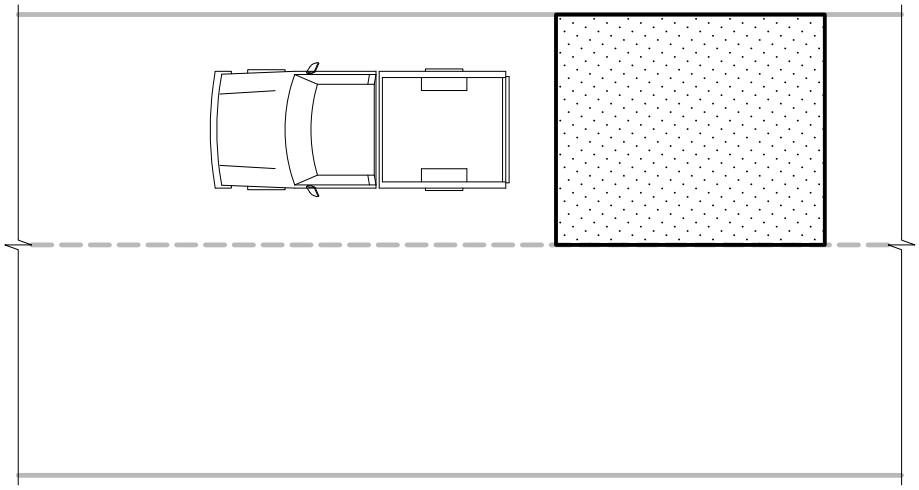

ACCEPTABLE

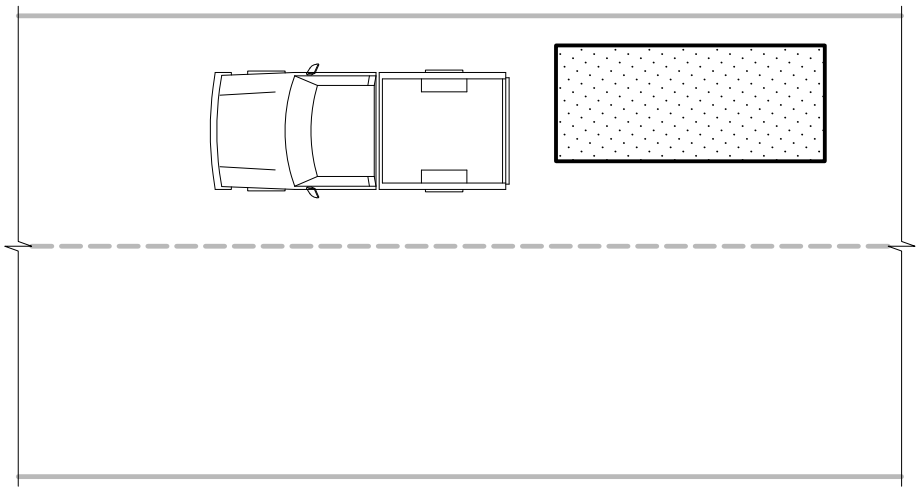

NOT ACCEPTABLE

NOTES

1. EXISTING PAVEMENTS SHALL BE REMOVED TO CLEAN, STRAIGHT LINES PARALLEL AND PERPENDICULAR TO THE FLOW OF TRAFFIC.
2. DO NOT CONSTRUCT PATCHES WITH ANGLED SIDES AND/OR IRREGULAR SHAPES.
3. ALL REPAIRS SHALL BE FULL LANE WIDTH.
4. FOR PATCHES IN ASPHALT, A TACK COAT SHALL BE APPLIED TO ALL EDGES OF THE EXISTING ASPHALT BEFORE PLACING THE NEW PAVEMENT.
5. AFTER PLACING THE NEW ASPHALT, ALL SEAMS (JOINTS) BETWEEN THE NEW AND EXISTING PAVEMENTS SHALL BE SEALED WITH AN ASPHALT TACK COAT OR RUBBERIZED CRACK SEAL MATERIAL.

MEMPHIS SEWER ASSESSMENT & REHABILITATION PROGRAM
SARP 10

BLACK & VEATCH
Building a world of difference.

SARP10

PAVEMENT REPAIR SINGLE LANE DETAILS

SCALE: NOT TO SCALE

REV 0.0

DATE: 04/04/14

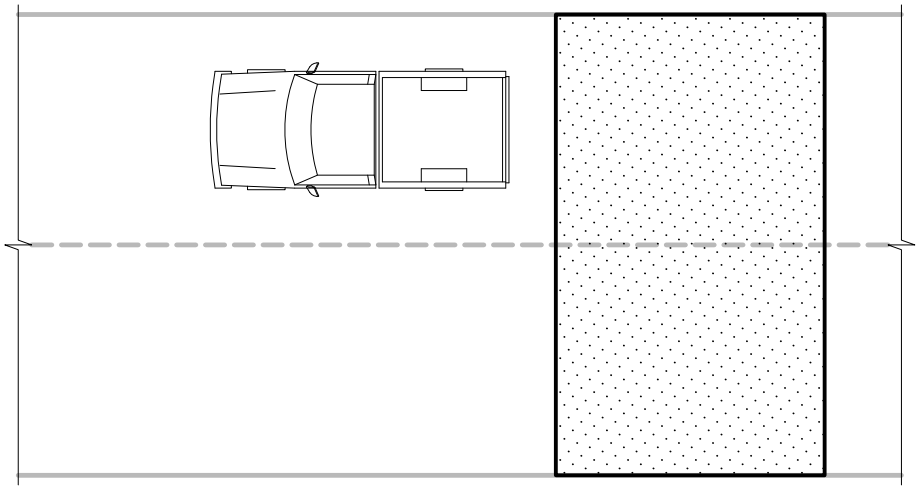

ACCEPTABLE

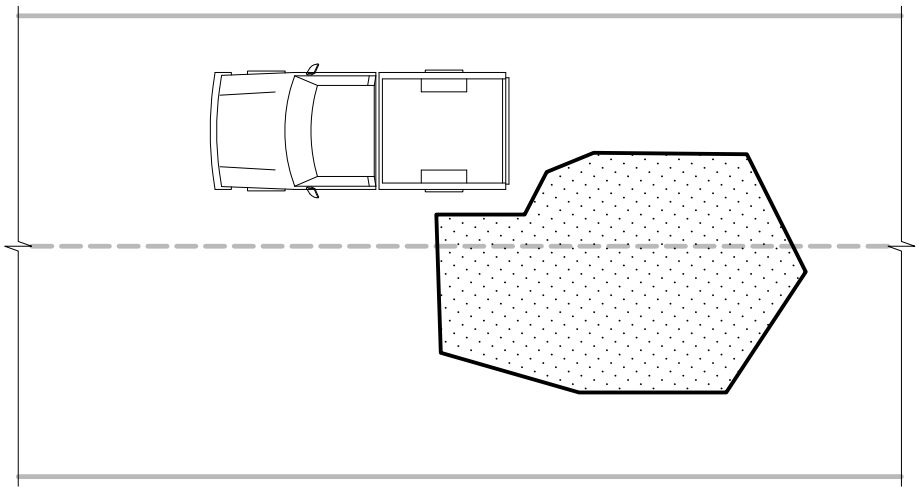

NOT ACCEPTABLE

NOTES

1. EXISTING PAVEMENTS SHALL BE REMOVED TO CLEAN, STRAIGHT LINES PARALLEL AND PERPENDICULAR TO THE FLOW OF TRAFFIC.
2. DO NOT CONSTRUCT PATCHES WITH ANGLED SIDES AND/OR IRREGULAR SHAPES.
3. ALL REPAIRS SHALL BE FULL LANE WIDTH.
4. FOR PATCHES IN ASPHALT, A TACK COAT SHALL BE APPLIED TO ALL EDGES OF THE EXISTING ASPHALT BEFORE PLACING THE NEW PAVEMENT.
5. AFTER PLACING THE NEW ASPHALT, ALL SEAMS (JOINTS) BETWEEN THE NEW AND EXISTING PAVEMENTS SHALL BE SEALED WITH AN ASPHALT TACK COAT OR RUBBERIZED CRACK SEAL MATERIAL.

MEMPHIS SEWER ASSESSMENT & REHABILITATION PROGRAM
SARP 10

BLACK & VEATCH
Building a world of difference.

SARP10

PAVEMENT REPAIR MULTI-LANE DETAILS

SCALE: NOT TO SCALE

REV 0.0

DATE: 04/04/14

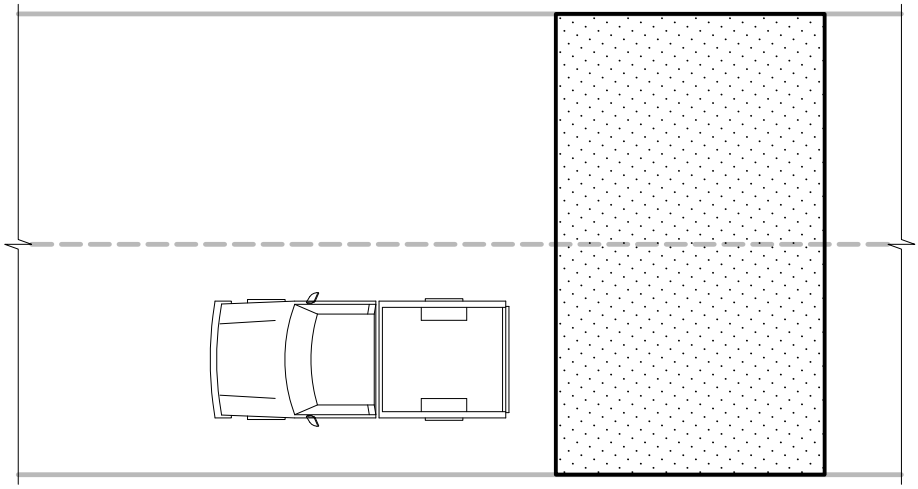

ACCEPTABLE

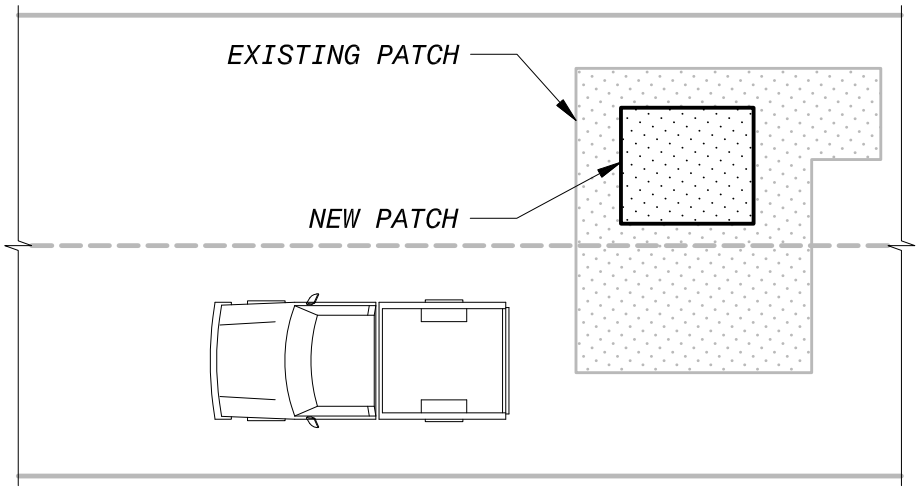

NOT ACCEPTABLE

NOTES

1. EXISTING PAVEMENTS SHALL BE REMOVED TO CLEAN, STRAIGHT LINES PARALLEL AND PERPENDICULAR TO THE FLOW OF TRAFFIC.
2. DO NOT CONSTRUCT PATCHES WITH ANGLED SIDES AND/OR IRREGULAR SHAPES.
3. ALL REPAIRS SHALL BE FULL LANE WIDTH.
4. FOR PATCHES IN ASPHALT, A TACK COAT SHALL BE APPLIED TO ALL EDGES OF THE EXISTING ASPHALT BEFORE PLACING THE NEW PAVEMENT.
5. AFTER PLACING THE NEW ASPHALT, ALL SEAMS (JOINTS) BETWEEN THE NEW AND EXISTING PAVEMENTS SHALL BE SEALED WITH AN ASPHALT TACK COAT OR RUBBERIZED CRACK SEAL MATERIAL.
6. AVOID PATCHES WITHIN PATCHES. IF THIS CANNOT BE AVOIDED, MAKE THE BOUNDARIES OF THE PATCHES COINCIDE.

MEMPHIS SEWER ASSESSMENT & REHABILITATION PROGRAM
SARP 10

BLACK & VEATCH
Building a world of difference.

SARP10

PAVEMENT REPAIR PATCH INSIDE A PATCH DETAILS

SCALE: NOT TO SCALE

REV 0.0

DATE: 04/04/14

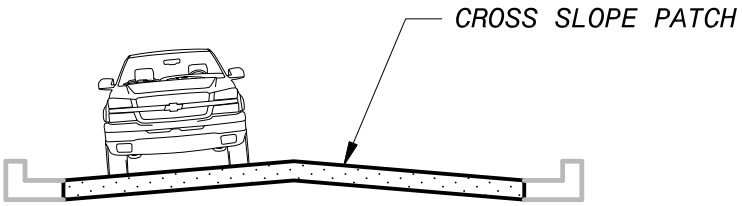

ACCEPTABLE

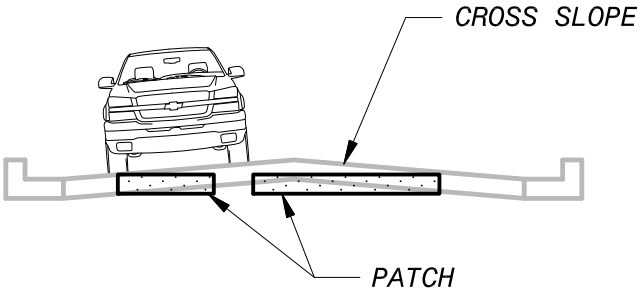

NOT ACCEPTABLE

NOTES

1. EXISTING PAVEMENTS SHALL BE REMOVED TO CLEAN, STRAIGHT LINES PARALLEL AND PERPENDICULAR TO THE FLOW OF TRAFFIC.
2. DO NOT CONSTRUCT PATCHES WITH ANGLED SIDES AND/OR IRREGULAR SHAPES.
3. ALL REPAIRS SHALL BE FULL LANE WIDTH.
4. FOR PATCHES IN ASPHALT, A TACK COAT SHALL BE APPLIED TO ALL EDGES OF THE EXISTING ASPHALT BEFORE PLACING THE NEW PAVEMENT.
5. AFTER PLACING THE NEW ASPHALT, ALL SEAMS (JOINTS) BETWEEN THE NEW AND EXISTING PAVEMENTS SHALL BE SEALED WITH AN ASPHALT TACK COAT OR RUBBERIZED CRACK SEAL MATERIAL.
6. PATCHES SHALL HAVE A SMOOTH LONGITUDINAL GRADE CONSISTENT WITH THE EXISTING ROADWAY.
7. PATCHES SHALL ALSO HAVE A CROSS SLOPE OR CROSS SECTION CONSISTENT WITH THE DESIGN OF THE EXISTING ROADWAY.

MEMPHIS SEWER ASSESSMENT & REHABILITATION PROGRAM
SARP 10

BLACK & VEATCH
Building a world of difference.

SARP10

PAVEMENT REPAIR
CROSS SLOPE
DETAILS

SCALE: NOT TO SCALE

REV 0.0

DATE: 04/04/14

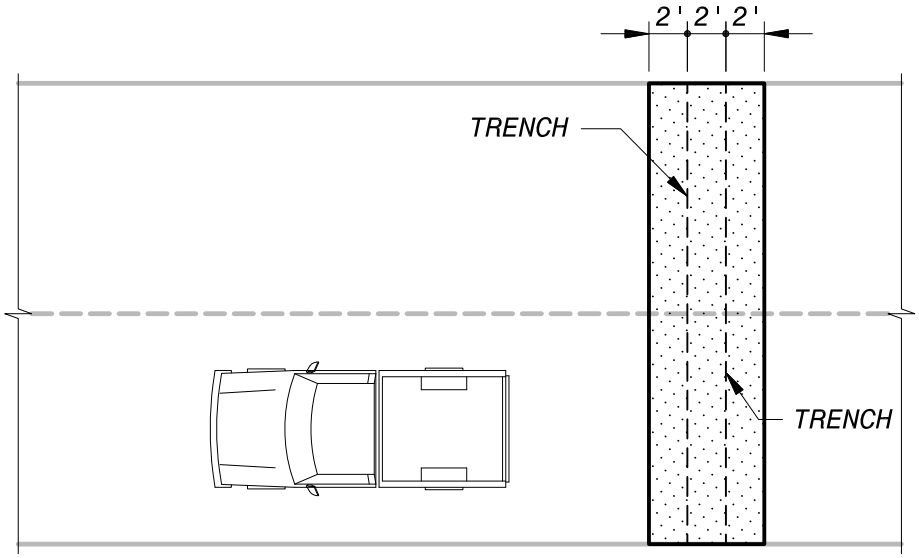

ACCEPTABLE

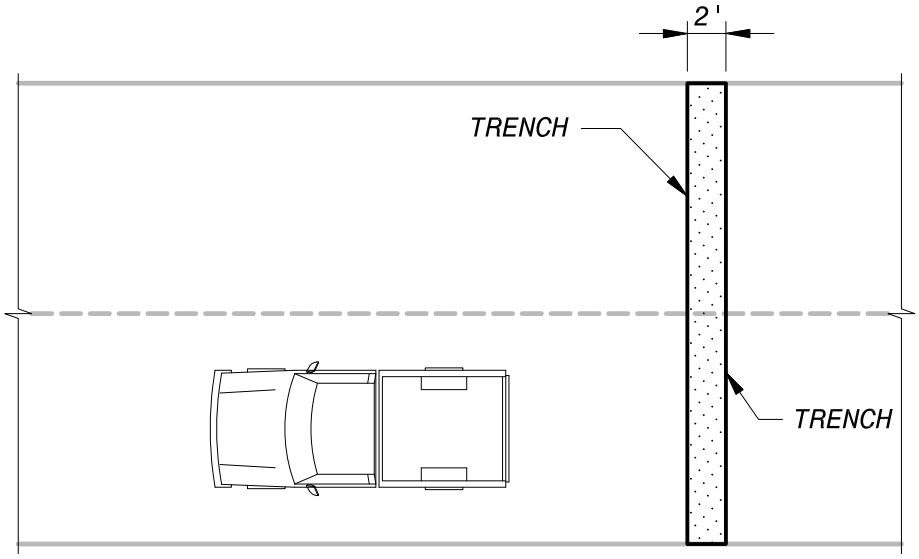

NOT ACCEPTABLE

NOTES

1. EXISTING PAVEMENTS SHALL BE REMOVED TO CLEAN, STRAIGHT LINES PARALLEL AND PERPENDICULAR TO THE FLOW OF TRAFFIC.
2. DO NOT CONSTRUCT PATCHES WITH ANGLED SIDES AND/OR IRREGULAR SHAPES.
3. ALL REPAIRS SHALL BE FULL LANE WIDTH.
4. FOR PATCHES IN ASPHALT, A TACK COAT SHALL BE APPLIED TO ALL EDGES OF THE EXISTING ASPHALT BEFORE PLACING THE NEW PAVEMENT.
5. AFTER PLACING THE NEW ASPHALT, ALL SEAMS (JOINTS) BETWEEN THE NEW AND EXISTING PAVEMENTS SHALL BE SEALED WITH AN ASPHALT TACK COAT OR RUBBERIZED CRACK SEAL MATERIAL.
6. TRAVERSE PATCHES SHALL BE OVERLAID ACROSS THE ENTIRE STREET WIDTH FOR A DISTANCE OF TWO (2) FEET MINIMUM ON ALL SIDES OF THE TRENCH.

MEMPHIS SEWER ASSESSMENT & REHABILITATION PROGRAM
SARP 10

BLACK & VEATCH
Building a world of difference.

SARP10

PAVEMENT REPAIR TRAVERSE PATCHES DETAILS

SCALE: NOT TO SCALE

REV 0.0

DATE: 04/04/14