BUREAU ENGINEER ____ DRAFTSMAN, O.T. DATE 9-1-78 SCALE N.T.S.
BUREAU, CIVIL DESIGN ____ BUREAU ENGINEER ____ DRAFTSMAN ____ DATE ____ SCALE ____

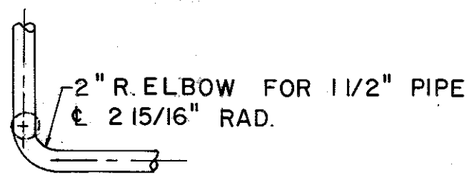

PLAN VIEW

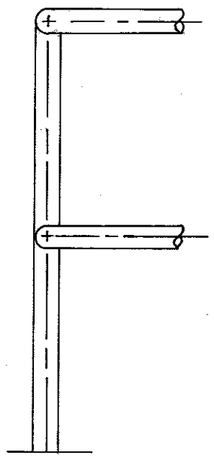

COR. PIPE RAIL

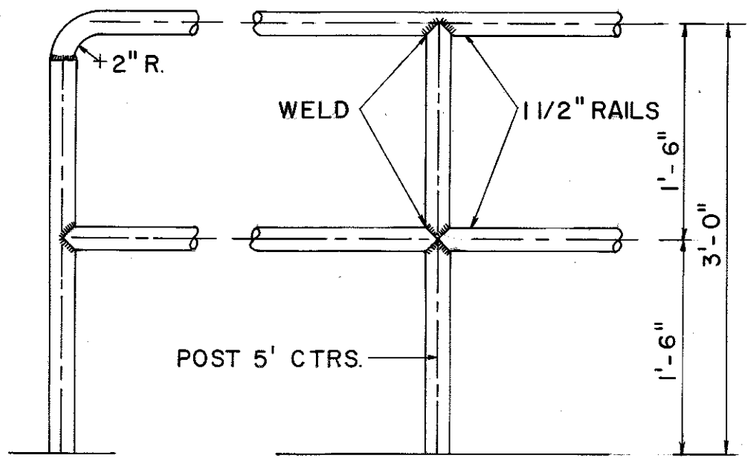

ELEVATION

PIPE RAIL & POST CLASS
ASTM-A-120

POST SET IN CONC. RETAINING WALL

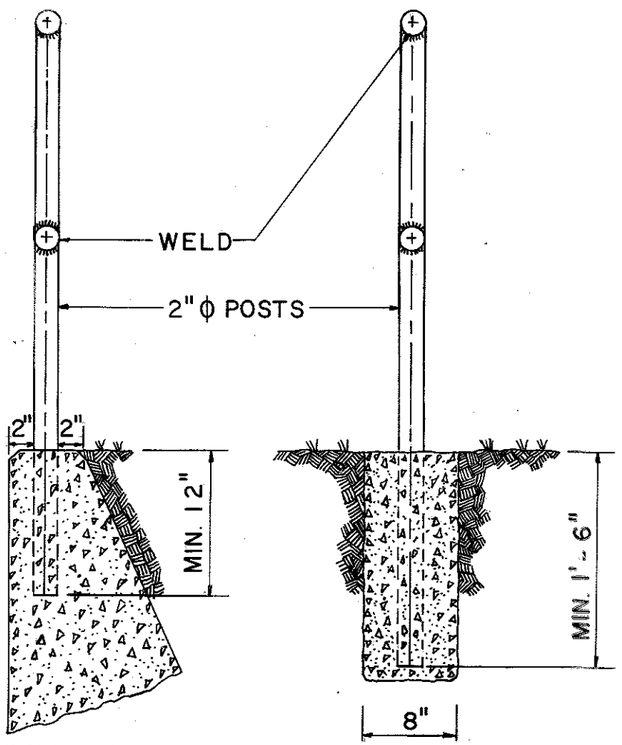

POST SET IN CONCRETE

NOTE:
PAINT AND PAINTING SHALL CONFORM TO THE* SPECIFICATION FOR PAINTING STEEL. AFTER SHOP FABRICATION IS COMPLETED ALL MEMBERS SHALL BE PAINTED WITH A COAT, EXCEPT THAT ONLY BOILED LINSEED OIL SHALL BE APPLIED ON THE AREAS WHERE FIELD WELDING IS TO BE DONE. TWO COATS OF PAINT SHALL BE APPLIED AFTER ERECTION HAS BEEN COMPLETED.

* A.A.S.H.T.O. 1977 EDITION, SECTION 14, PAINT SHALL BE FOLIAGE GREEN M-67

REVISIONS

NO.	DATE	BY	REMARKS
1	5-30-85	L.R.H.	REMOVED DIV. OF PUBLIC WORKS (T. BLK.)
2	2-3-88	D.H.G.	REMOVED DEPARTMENT (T. BLK.)

CONVERSIONS

ENGLISH	METRIC

CITY OF MEMPHIS
DIVISION OF ENGINEERING

DESIGN STANDARD FOR HAND RAIL

C. R. Samuels 12/1/78
DEP. CITY ENGINEER DATE

Fory E. Read

DWG. NO. 11

JC5756