REVISIONS			
NO.	DATE	BY	REMARKS

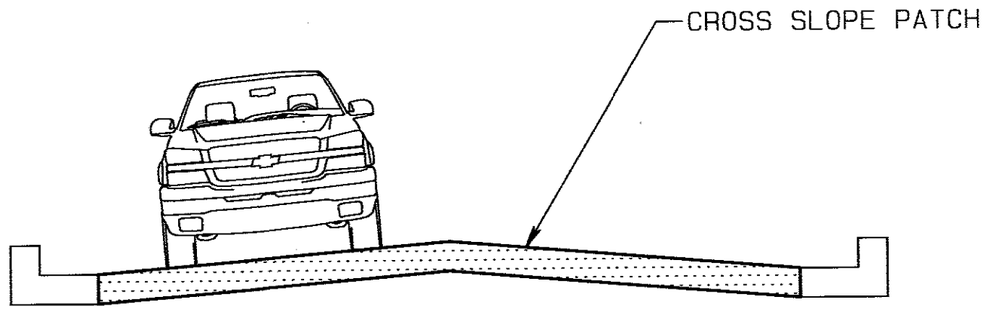

ACCEPTABLE

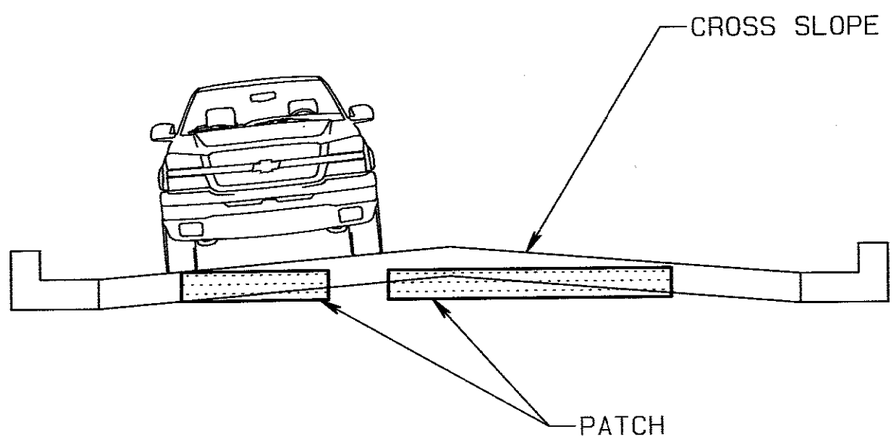

NOT ACCEPTABLE

NOT TO SCALE

NOTES

1. EXISTING PAVEMENTS SHALL BE REMOVED TO CLEAN, STRAIGHT LINES PARALLEL AND PERPENDICULAR TO THE FLOW OF TRAFFIC.
2. DO NOT CONSTRUCT PATCHES WITH ANGLED SIDES AND/OR IRREGULAR SHAPES.
3. ALL REPAIRS SHALL BE FULL LANE WIDTH.
4. FOR PATCHES IN ASPHALT, A TACK COAT SHALL BE APPLIED TO ALL EDGES OF THE EXISTING ASPHALT BEFORE PLACING THE NEW PAVEMENT.
5. AFTER PLACING THE NEW ASPHALT, ALL SEAMS (JOINTS) BETWEEN THE NEW AND EXISTING PAVEMENTS SHALL BE SEALED WITH AN ASPHALT TACK COAT OR RUBBERIZED CRACK SEAL MATERIAL.
6. PATCHES SHALL HAVE A SMOOTH LONGITUDINAL GRADE CONSISTENT WITH THE EXISTING ROADWAY.
7. PATCHES SHALL ALSO HAVE A CROSS SLOPE OR CROSS SECTION CONSISTENT WITH THE DESIGN OF THE EXISTING ROADWAY.

CITY OF MEMPHIS
DIVISION OF ENGINEERING

DESIGN STANDARD

FOR

PAVEMENT REPAIR CROSS SLOPE DETAILS

Chee Chew — 12.11.19
CIVIL DESIGN ENGINEER — DATE

12/11/19
CITY ENGINEER — DATE

DWG. NO. 53 C