BUREAU ENGINEER DRAFTSMAN, db DATE, 10-79 SCALE 1 1/2" = 1'-0"

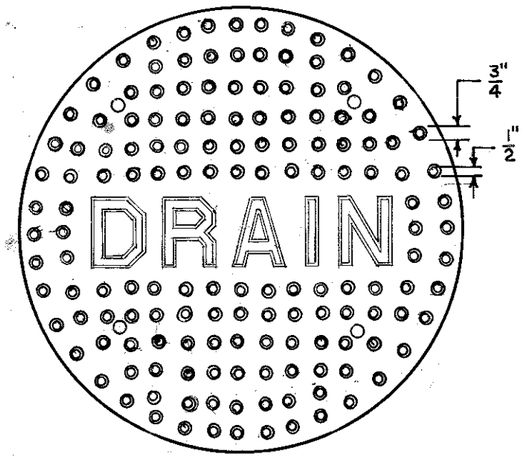

TOP PLAN

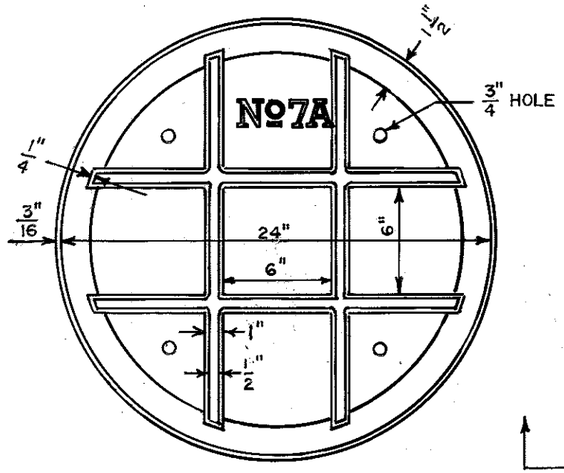

BOTTOM PLAN

MANHOLE COVER NO. 7A

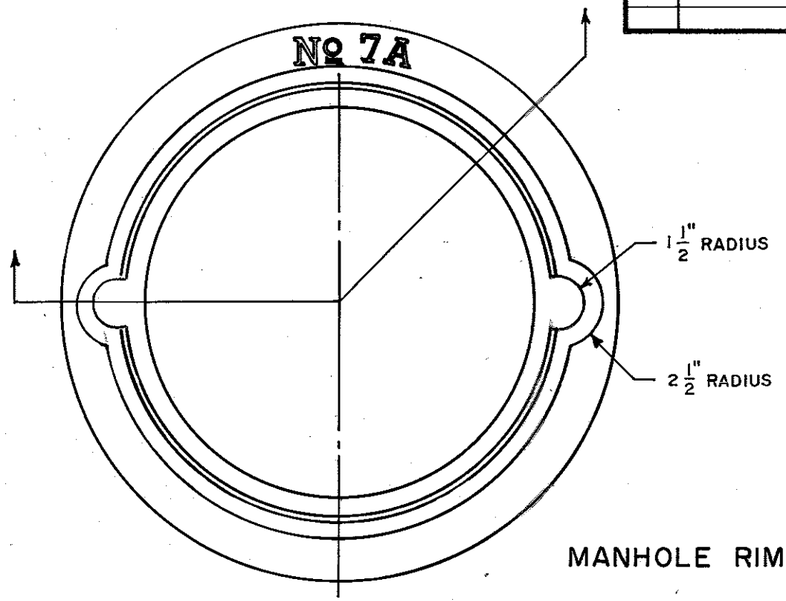

TOP PLAN

MANHOLE RIM NO. 7A

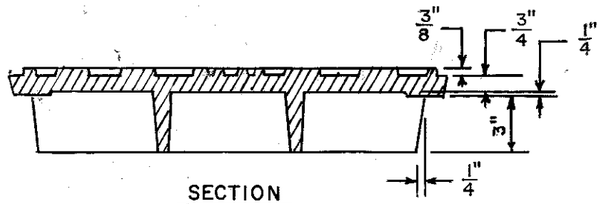

SECTION

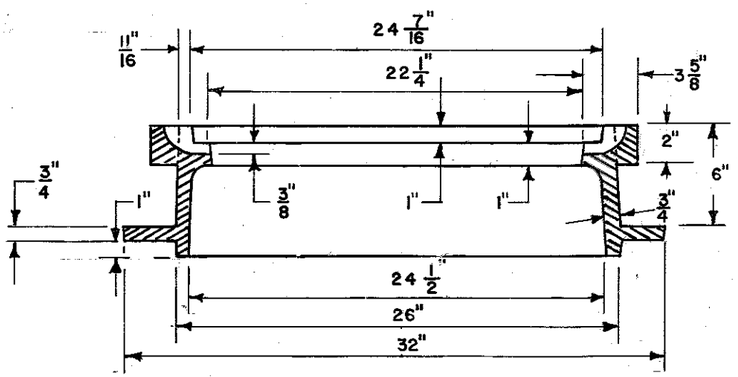

OPTIONAL RIM SECTION

NOT TO SCALE

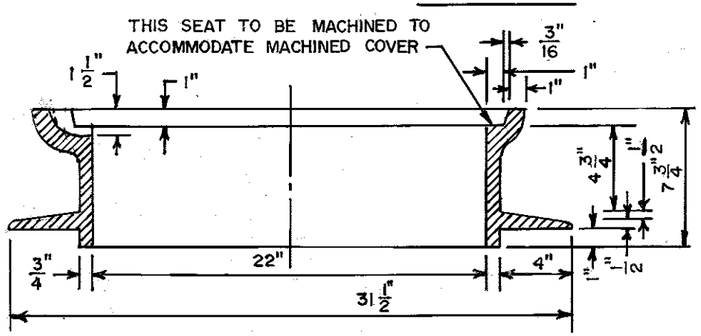

SECTION

NOTE:
WEIGHT—COVER 150 lbs. MINIMUM
FRAME 200 lbs. MINIMUM

NOTE:
IF BOLTED-DOWN RIM & COVER ARE REQUIRED, SEE CITY OF MEMPHIS DESIGN STANDARD SST-8.

REVISIONS

NO.	DATE	BY	REMARKS
1	5-7-85	L.R.H.	REMOVED DIV. OF PUBLIC WORKS (T. BLK.)
2	2-4-88	D.H.G.	REMOVED DEPARTMENT (T. BLK.)
3	6-14-88	D.H.G.	OPTIONAL RIM SECTION
4	2-14-11	L.R.H.	REVISED WEIGHTS

CONVERSIONS

ENGLISH	METRIC

CITY OF MEMPHIS
DIVISION OF ENGINEERING

DESIGN STANDARD
FOR
NO. 7A
MANHOLE RIM AND COVER

Ray Marsan — 12-19-79
PRINCIPAL CIVIL ENGINEER

J. G. James Jr. — 1-2-80
DEPUTY DIRECTOR/ CIVIL ENGINEER — DATE

DWG. NO. 14

JC5756